Engineering Mechanics Statics 14th edition Hibbeler Solutions Manual

SKU: 9780133918922-SOLUTIONS

© 2016 Pearson Education, Inc., Upper Saddle River, NJ. All rights reserved. This material is protected under all copyright laws as they currently exist. No portion of this material may be reproduced, in any form or by any means, without permission in writing from the publisher.

2–1.

If $\theta = 60°$ and $F = 450$ N, determine the magnitude of the resultant force and its direction, measured counterclockwise from the positive x axis.

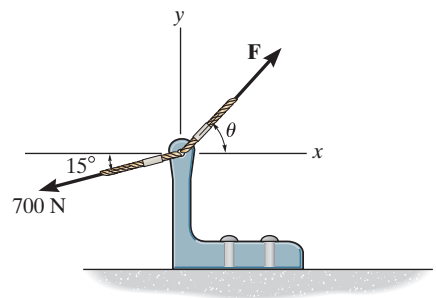

SOLUTION

The parallelogram law of addition and the triangular rule are shown in Figs. *a* and *b*, respectively.

Applying the law of consines to Fig. *b*,

$$F_R = \sqrt{700^2 + 450^2 - 2(700)(450)\cos 45°}$$

$$= 497.01 \text{ N} = 497 \text{ N} \qquad \textbf{Ans.}$$

This yields

$$\frac{\sin\alpha}{700} = \frac{\sin 45°}{497.01} \qquad \alpha = 95.19°$$

Thus, the direction of angle ϕ of $\mathbf{F}_R$ measured counterclockwise from the positive x axis, is

$$\phi = \alpha + 60° = 95.19° + 60° = 155° \qquad \textbf{Ans.}$$

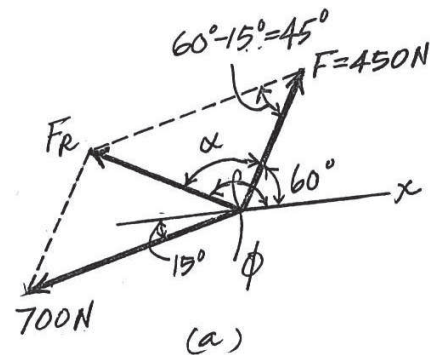

(a)

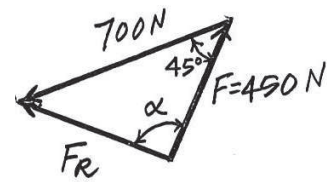

(b)

Ans:
$F_R = 497$ N
$\phi = 155°$

Engineering Mechanics Statics 14th edition Hibbeler Solutions Manual

© 2016 Pearson Education, Inc., Upper Saddle River, NJ. All rights reserved. This material is protected under all copyright laws as they currently exist. No portion of this material may be reproduced, in any form or by any means, without permission in writing from the publisher.

2–2.

If the magnitude of the resultant force is to be 500 N, directed along the positive y axis, determine the magnitude of force **F** and its direction θ.

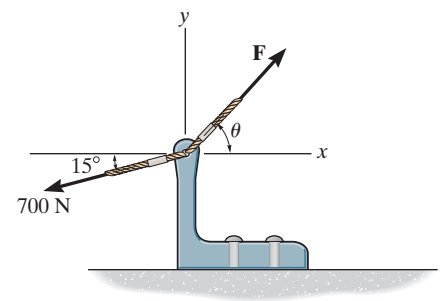

SOLUTION

The parallelogram law of addition and the triangular rule are shown in Figs. a and b, respectively.

Applying the law of cosines to Fig. b,

$$F = \sqrt{500^2 + 700^2 - 2(500)(700)\cos 105^\circ}$$

$$= 959.78 \text{ N} = 960 \text{ N} \qquad \textbf{Ans.}$$

Applying the law of sines to Fig. b, and using this result, yields

$$\frac{\sin(90^\circ + \theta)}{700} = \frac{\sin 105^\circ}{959.78}$$

$$\theta = 45.2^\circ \qquad \textbf{Ans.}$$

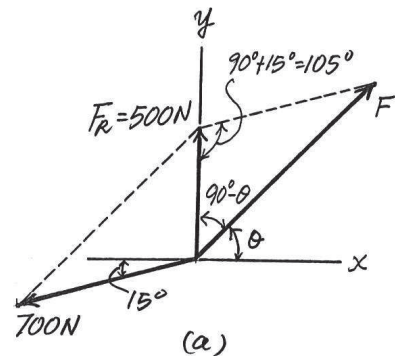

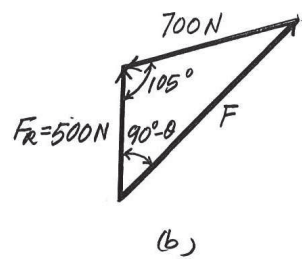

Ans:
$F = 960$ N
$\theta = 45.2^\circ$

Engineering Mechanics Statics 14th edition Hibbeler Solutions Manual

© 2016 Pearson Education, Inc., Upper Saddle River, NJ. All rights reserved. This material is protected under all copyright laws as they currently exist. No portion of this material may be reproduced, in any form or by any means, without permission in writing from the publisher.

2–3.

Determine the magnitude of the resultant force $\mathbf{F}_R = \mathbf{F}_1 + \mathbf{F}_2$ and its direction, measured counterclockwise from the positive x axis.

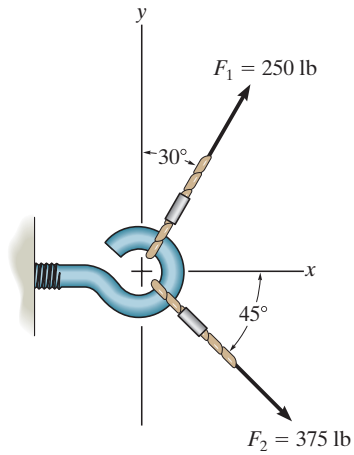

SOLUTION

$$F_R = \sqrt{(250)^2 + (375)^2 - 2(250)(375)\cos 75^\circ} = 393.2 = 393 \text{ lb} \qquad \textbf{Ans.}$$

$$\frac{393.2}{\sin 75^\circ} = \frac{250}{\sin \theta}$$

$$\theta = 37.89^\circ$$

$$\phi = 360^\circ - 45^\circ + 37.89^\circ = 353^\circ \qquad \textbf{Ans.}$$

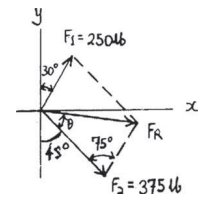

Ans:
$F_R = 393$ lb
$\phi = 353^\circ$

Engineering Mechanics Statics 14th edition Hibbeler Solutions Manual

© 2016 Pearson Education, Inc., Upper Saddle River, NJ. All rights reserved. This material is protected under all copyright laws as they currently exist. No portion of this material may be reproduced, in any form or by any means, without permission in writing from the publisher.

***2–4.**

The vertical force **F** acts downward at A on the two-membered frame. Determine the magnitudes of the two components of **F** directed along the axes of AB and AC. Set $F = 500$ N.

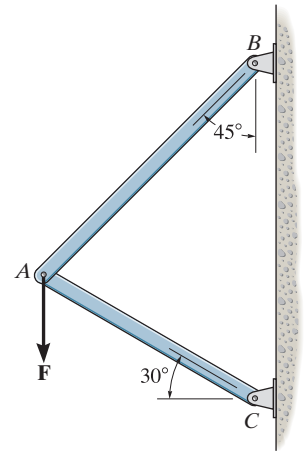

SOLUTION

Parallelogram Law: The parallelogram law of addition is shown in Fig. a.

Trigonometry: Using the law of sines (Fig. b), we have

$$\frac{F_{AB}}{\sin 60^\circ} = \frac{500}{\sin 75^\circ}$$

$$F_{AB} = 448 \text{ N} \qquad \textbf{Ans.}$$

$$\frac{F_{AC}}{\sin 45^\circ} = \frac{500}{\sin 75^\circ}$$

$$F_{AC} = 366 \text{ N} \qquad \textbf{Ans.}$$

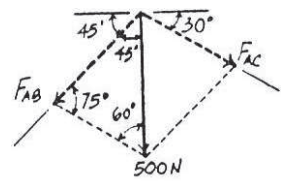

(a)

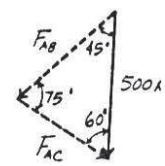

(b)

Ans:
$F_{AB} = 448$ N
$F_{AC} = 366$ N

Engineering Mechanics Statics 14th edition Hibbeler Solutions Manual

© 2016 Pearson Education, Inc., Upper Saddle River, NJ. All rights reserved. This material is protected under all copyright laws as they currently exist. No portion of this material may be reproduced, in any form or by any means, without permission in writing from the publisher.

2–5.

Solve Prob. 2-4 with $F = 350$ lb.

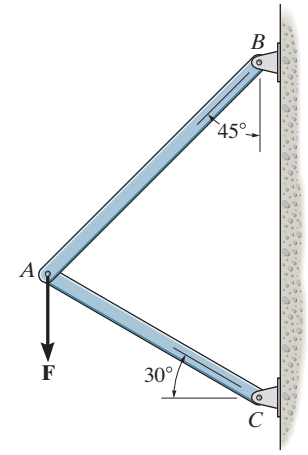

SOLUTION

Parallelogram Law: The parallelogram law of addition is shown in Fig. *a*.

Trigonometry: Using the law of sines (Fig. *b*), we have

$$\frac{F_{AB}}{\sin 60^\circ} = \frac{350}{\sin 75^\circ}$$

$$F_{AB} = 314 \text{ lb}$$ **Ans.**

$$\frac{F_{AC}}{\sin 45^\circ} = \frac{350}{\sin 75^\circ}$$

$$F_{AC} = 256 \text{ lb}$$ **Ans.**

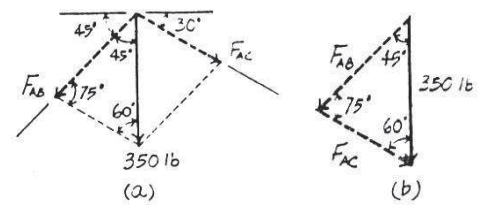

Ans:
$F_{AB} = 314$ lb
$F_{AC} = 256$ lb

Engineering Mechanics Statics 14th edition Hibbeler Solutions Manual

© 2016 Pearson Education, Inc., Upper Saddle River, NJ. All rights reserved. This material is protected under all copyright laws as they currently exist. No portion of this material may be reproduced, in any form or by any means, without permission in writing from the publisher.

2–6.

Determine the magnitude of the resultant force $\mathbf{F}_R = \mathbf{F}_1 + \mathbf{F}_2$ and its direction, measured clockwise from the positive u axis.

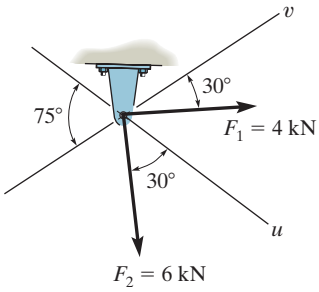

SOLUTION

Parallelogram Law. The parallelogram law of addition is shown in Fig. *a*,
Trigonometry. Applying Law of cosines by referring to Fig. *b*,

$$F_R = \sqrt{4^2 + 6^2 - 2(4)(6)\cos 105^\circ} = 8.026 \text{ kN} = 8.03 \text{ kN}$$ **Ans.**

Using this result to apply Law of sines, Fig. *b*,

$$\frac{\sin\theta}{6} = \frac{\sin 105^\circ}{8.026}; \qquad \theta = 46.22^\circ$$

Thus, the direction ϕ of $\mathbf{F}_R$ measured clockwise from the positive u axis is

$$\phi = 46.22^\circ - 45^\circ = 1.22^\circ$$ **Ans.**

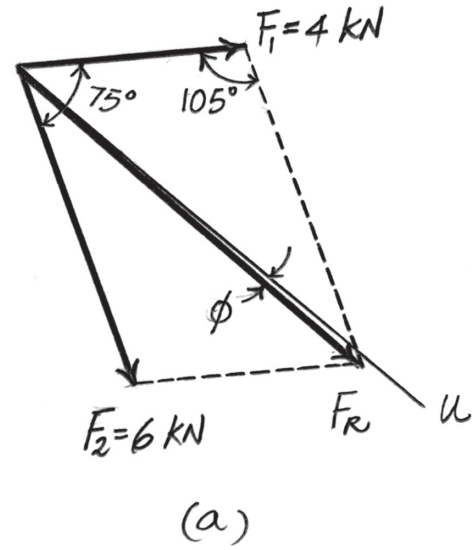

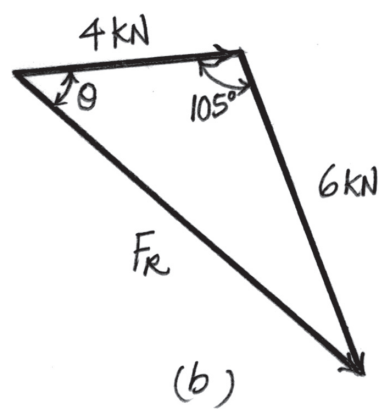

Ans:
$\phi = 1.22^\circ$

Engineering Mechanics Statics 14th edition Hibbeler Solutions Manual

© 2016 Pearson Education, Inc., Upper Saddle River, NJ. All rights reserved. This material is protected under all copyright laws as they currently exist. No portion of this material may be reproduced, in any form or by any means, without permission in writing from the publisher.

2–7.

Resolve the force $\mathbf{F}_1$ into components acting along the u and v axes and determine the magnitudes of the components.

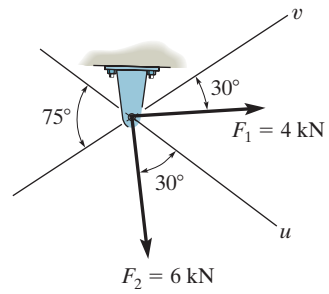

SOLUTION

Parallelogram Law. The parallelogram law of addition is shown in Fig. *a*,
Trigonometry. Applying the sines law by referring to Fig. *b*.

$$\frac{(F_1)_v}{\sin 45^\circ} = \frac{4}{\sin 105^\circ}; \qquad (F_1)_v = 2.928 \text{ kN} = 2.93 \text{ kN} \qquad \textbf{Ans.}$$

$$\frac{(F_1)_u}{\sin 30^\circ} = \frac{4}{\sin 105^\circ}; \qquad (F_1)_u = 2.071 \text{ kN} = 2.07 \text{ kN} \qquad \textbf{Ans.}$$

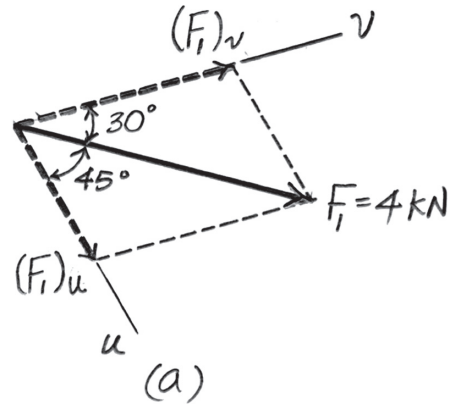

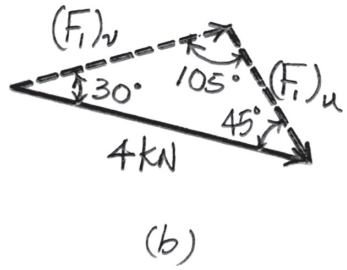

Ans:
$(F_1)_v = 2.93$ kN
$(F_1)_u = 2.07$ kN

Engineering Mechanics Statics 14th edition Hibbeler Solutions Manual

© 2016 Pearson Education, Inc., Upper Saddle River, NJ. All rights reserved. This material is protected under all copyright laws as they currently exist. No portion of this material may be reproduced, in any form or by any means, without permission in writing from the publisher.

***2–8.**

Resolve the force $\mathbf{F}_2$ into components acting along the u and v axes and determine the magnitudes of the components.

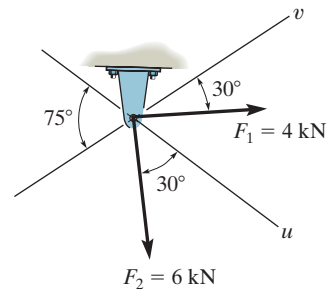

SOLUTION

Parallelogram Law. The parallelogram law of addition is shown in Fig. *a*,
Trigonometry. Applying the sines law of referring to Fig. *b*,

$$\frac{(F_2)_u}{\sin 75^\circ} = \frac{6}{\sin 75^\circ}; \qquad (F_2)_u = 6.00 \text{ kN} \qquad \textbf{Ans.}$$

$$\frac{(F_2)_v}{\sin 30^\circ} = \frac{6}{\sin 75^\circ}; \qquad (F_2)_v = 3.106 \text{ kN} = 3.11 \text{ kN} \qquad \textbf{Ans.}$$

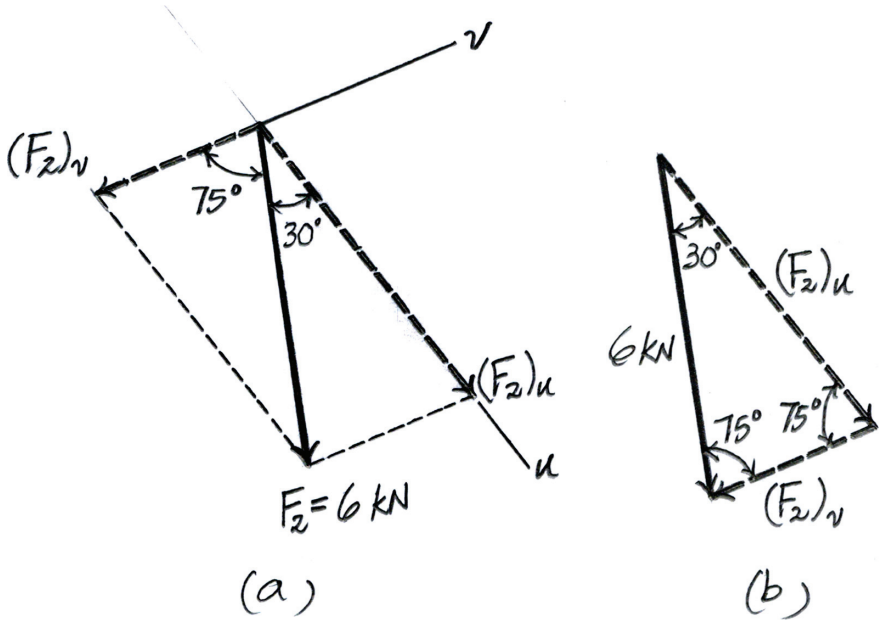

Ans:
$(F_2)_u = 6.00$ kN
$(F_2)_v = 3.11$ kN

Engineering Mechanics Statics 14th edition Hibbeler Solutions Manual

© 2016 Pearson Education, Inc., Upper Saddle River, NJ. All rights reserved. This material is protected under all copyright laws as they currently exist. No portion of this material may be reproduced, in any form or by any means, without permission in writing from the publisher.

2–9.

If the resultant force acting on the support is to be 1200 lb, directed horizontally to the right, determine the force **F** in rope A and the corresponding angle θ.

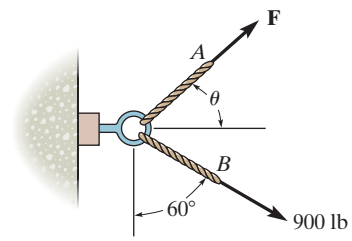

SOLUTION

Parallelogram Law. The parallelogram law of addition is shown in Fig. a,
Trigonometry. Applying the law of cosines by referring to Fig. b,

$$F = \sqrt{900^2 + 1200^2 - 2(900)(1200)\cos 30^\circ} = 615.94 \text{ lb} = 616 \text{ lb}$$ **Ans.**

Using this result to apply the sines law, Fig. b,

$$\frac{\sin\theta}{900} = \frac{\sin 30^\circ}{615.94}; \qquad \theta = 46.94^\circ = 46.9^\circ$$ **Ans.**

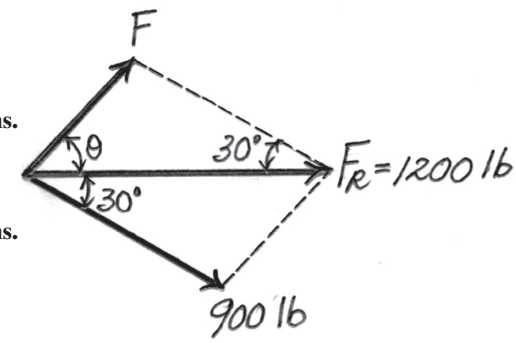

(a)

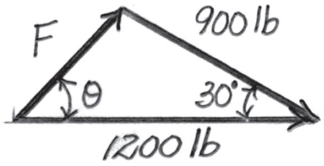

(b)

Ans:
$F = 616$ lb
$\theta = 46.9^\circ$

Engineering Mechanics Statics 14th edition Hibbeler Solutions Manual

© 2016 Pearson Education, Inc., Upper Saddle River, NJ. All rights reserved. This material is protected under all copyright laws as they currently exist. No portion of this material may be reproduced, in any form or by any means, without permission in writing from the publisher.

2–10.

Determine the magnitude of the resultant force and its direction, measured counterclockwise from the positive x axis.

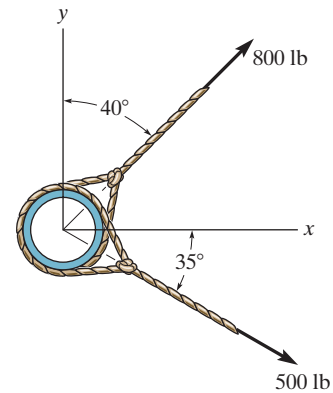

SOLUTION

Parallelogram Law. The parallelogram law of addition is shown in Fig. *a*,
Trigonometry. Applying the law of cosines by referring to Fig. *b*,

$$F_R = \sqrt{800^2 + 500^2 - 2(800)(500)\cos 95^\circ} = 979.66 \text{ lb} = 980 \text{ lb} \qquad \textbf{Ans.}$$

Using this result to apply the sines law, Fig. *b*,

$$\frac{\sin\theta}{500} = \frac{\sin 95^\circ}{979.66}; \qquad \theta = 30.56^\circ$$

Thus, the direction ϕ of $\mathbf{F}_R$ measured counterclockwise from the positive x axis is

$$\phi = 50^\circ - 30.56^\circ = 19.44^\circ = 19.4^\circ \qquad \textbf{Ans.}$$

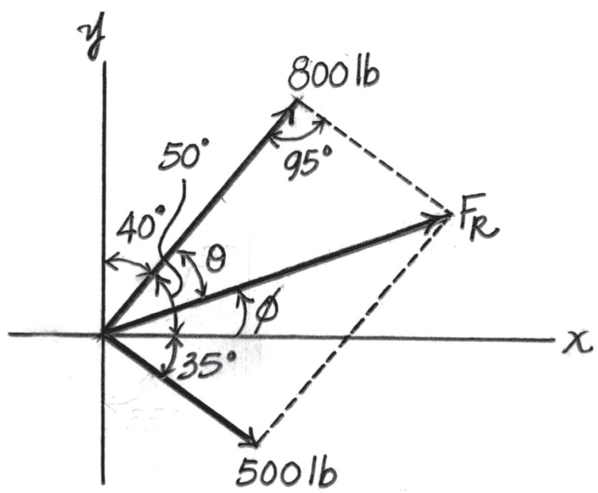

(a)

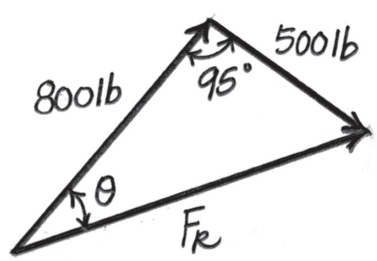

(b)

Ans:
$F_R = 980$ lb
$\phi = 19.4^\circ$

Engineering Mechanics Statics 14th edition Hibbeler Solutions Manual

© 2016 Pearson Education, Inc., Upper Saddle River, NJ. All rights reserved. This material is protected under all copyright laws as they currently exist. No portion of this material may be reproduced, in any form or by any means, without permission in writing from the publisher.

2–11.

The plate is subjected to the two forces at A and B as shown. If $\theta = 60°$, determine the magnitude of the resultant of these two forces and its direction measured clockwise from the horizontal.

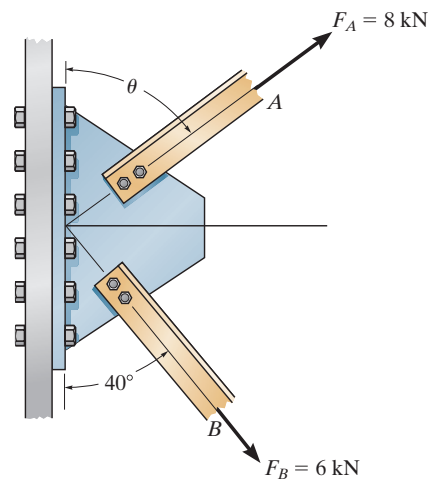

SOLUTION

Parallelogram Law: The parallelogram law of addition is shown in Fig. *a*.

Trigonometry: Using law of cosines (Fig. *b*), we have

$$F_R = \sqrt{8^2 + 6^2 - 2(8)(6)\cos 100°}$$

$$= 10.80 \text{ kN} = 10.8 \text{ kN} \qquad \textbf{Ans.}$$

The angle θ can be determined using law of sines (Fig. *b*).

$$\frac{\sin\theta}{6} = \frac{\sin 100°}{10.80}$$

$$\sin\theta = 0.5470$$

$$\theta = 33.16°$$

Thus, the direction ϕ of $\mathbf{F}_R$ measured from the x axis is

$$\phi = 33.16° - 30° = 3.16° \qquad \textbf{Ans.}$$

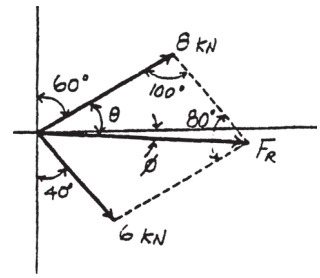

(a)

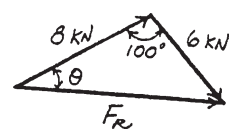

(b)

Ans:
$F_R = 10.8$ kN
$\phi = 3.16°$

Engineering Mechanics Statics 14th edition Hibbeler Solutions Manual

© 2016 Pearson Education, Inc., Upper Saddle River, NJ. All rights reserved. This material is protected under all copyright laws as they currently exist. No portion of this material may be reproduced, in any form or by any means, without permission in writing from the publisher.

***2–12.**

Determine the angle of θ for connecting member A to the plate so that the resultant force of $\mathbf{F}_A$ and $\mathbf{F}_B$ is directed horizontally to the right. Also, what is the magnitude of the resultant force?

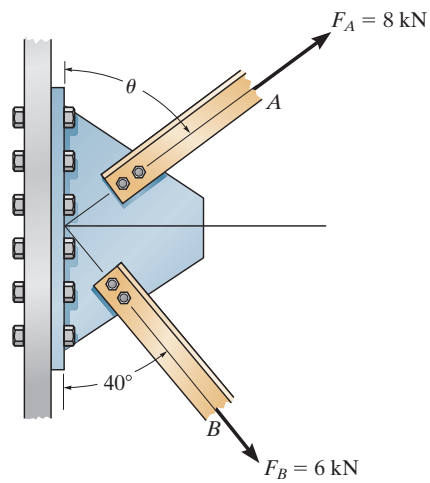

SOLUTION

Parallelogram Law: The parallelogram law of addition is shown in Fig. *a*.

Trigonometry: Using law of sines (Fig .*b*), we have

$$\frac{\sin(90° - \theta)}{6} = \frac{\sin 50°}{8}$$

$$\sin(90° - \theta) = 0.5745$$

$$\theta = 54.93° = 54.9° \qquad \textbf{Ans.}$$

From the triangle, $\phi = 180° - (90° - 54.93°) - 50° = 94.93°$. Thus, using law of cosines, the magnitude of $\mathbf{F}_R$ is

$$F_R = \sqrt{8^2 + 6^2 - 2(8)(6)\cos 94.93°}$$

$$= 10.4 \text{ kN} \qquad \textbf{Ans.}$$

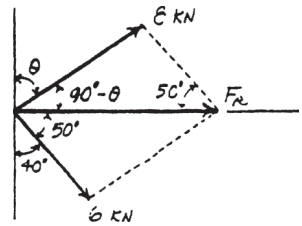

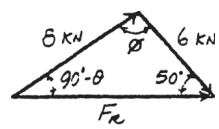

(b)

Ans:
$\theta = 54.9°$
$F_R = 10.4$ kN

Engineering Mechanics Statics 14th edition Hibbeler Solutions Manual

© 2016 Pearson Education, Inc., Upper Saddle River, NJ. All rights reserved. This material is protected under all copyright laws as they currently exist. No portion of this material may be reproduced, in any form or by any means, without permission in writing from the publisher.

2–13.

The force acting on the gear tooth is $F = 20$ lb. Resolve this force into two components acting along the lines *aa* and *bb*.

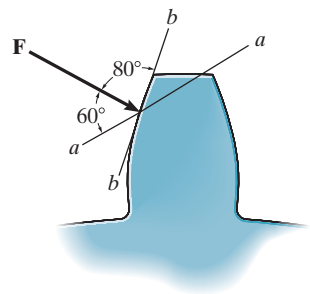

SOLUTION

$$\frac{20}{\sin 40^\circ} = \frac{F_a}{\sin 80^\circ}; \qquad F_a = 30.6 \text{ lb} \qquad \textbf{Ans.}$$

$$\frac{20}{\sin 40^\circ} = \frac{F_b}{\sin 60^\circ}; \qquad F_b = 26.9 \text{ lb} \qquad \textbf{Ans.}$$

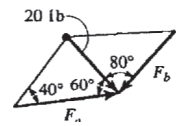

Ans:
$F_a = 30.6$ lb
$F_b = 26.9$ lb

Engineering Mechanics Statics 14th edition Hibbeler Solutions Manual

© 2016 Pearson Education, Inc., Upper Saddle River, NJ. All rights reserved. This material is protected under all copyright laws as they currently exist. No portion of this material may be reproduced, in any form or by any means, without permission in writing from the publisher.

2–14.

The component of force **F** acting along line *aa* is required to be 30 lb. Determine the magnitude of **F** and its component along line *bb*.

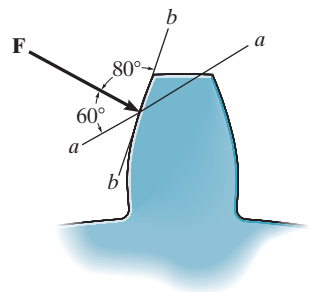

SOLUTION

$$\frac{30}{\sin 80^\circ} = \frac{F}{\sin 40^\circ}; \qquad F = 19.6 \text{ lb} \qquad \textbf{Ans.}$$

$$\frac{30}{\sin 80^\circ} = \frac{F_b}{\sin 60^\circ}; \qquad F_b = 26.4 \text{ lb} \qquad \textbf{Ans.}$$

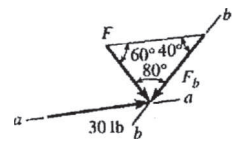

Ans:
$F = 19.6$ lb
$F_b = 26.4$ lb

Engineering Mechanics Statics 14th edition Hibbeler Solutions Manual

© 2016 Pearson Education, Inc., Upper Saddle River, NJ. All rights reserved. This material is protected under all copyright laws as they currently exist. No portion of this material may be reproduced, in any form or by any means, without permission in writing from the publisher.

2–15.

Force **F** acts on the frame such that its component acting along member AB is 650 lb, directed from B towards A, and the component acting along member BC is 500 lb, directed from B towards C. Determine the magnitude of **F** and its direction θ. Set $\phi = 60°$.

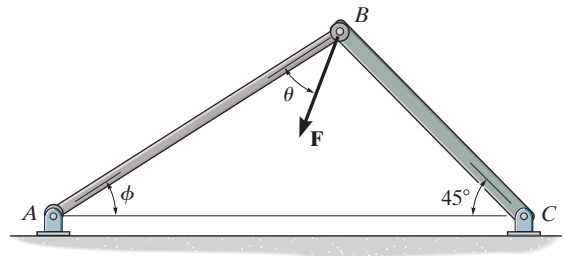

SOLUTION

The parallelogram law of addition and triangular rule are shown in Figs. a and b, respectively.

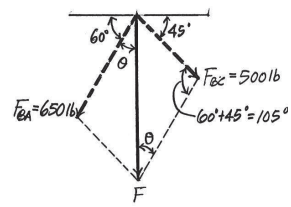

(a)

Applying the law of cosines to Fig. b,

$$F = \sqrt{500^2 + 650^2 - 2(500)(650)\cos 105°}$$

$$= 916.91 \text{ lb} = 917 \text{ lb} \qquad \textbf{Ans.}$$

Using this result and applying the law of sines to Fig. b, yields

$$\frac{\sin\theta}{500} = \frac{\sin 105°}{916.91} \qquad \theta = 31.8° \qquad \textbf{Ans.}$$

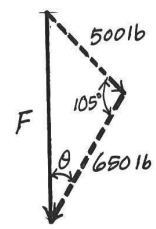

(b)

Ans:
$F = 917$ lb
$\theta = 31.8°$

Engineering Mechanics Statics 14th edition Hibbeler Solutions Manual

© 2016 Pearson Education, Inc., Upper Saddle River, NJ. All rights reserved. This material is protected under all copyright laws as they currently exist. No portion of this material may be reproduced, in any form or by any means, without permission in writing from the publisher.

***2–16.**

Force **F** acts on the frame such that its component acting along member AB is 650 lb, directed from B towards A. Determine the required angle ϕ $(0° \leq \phi \leq 45°)$ and the component acting along member BC. Set $F = 850$ lb and $\theta = 30°$.

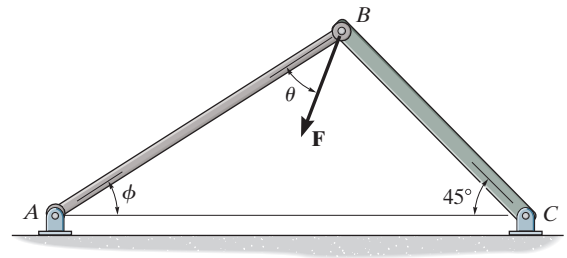

SOLUTION

The parallelogram law of addition and the triangular rule are shown in Figs. a and b, respectively.

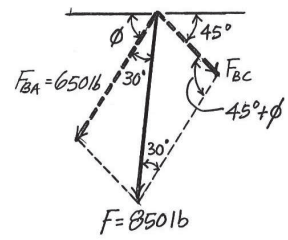

(a)

Applying the law of cosines to Fig. b,

$$F_{BC} = \sqrt{850^2 + 650^2 - 2(850)(650)\cos 30°}$$

$$= 433.64 \text{ lb} = 434 \text{ lb} \qquad \textbf{Ans.}$$

Using this result and applying the sine law to Fig. b, yields

$$\frac{\sin(45° + \phi)}{850} = \frac{\sin 30°}{433.64} \qquad \phi = 33.5° \qquad \textbf{Ans.}$$

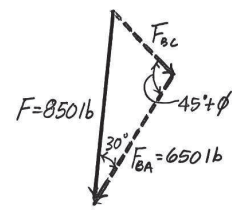

(b)

Ans:
$F_{BC} = 434$ lb
$\phi = 33.5°$

Engineering Mechanics Statics 14th edition Hibbeler Solutions Manual

© 2016 Pearson Education, Inc., Upper Saddle River, NJ. All rights reserved. This material is protected under all copyright laws as they currently exist. No portion of this material may be reproduced, in any form or by any means, without permission in writing from the publisher.

2–17.

Determine the magnitude and direction of the resultant $\mathbf{F}_R = \mathbf{F}_1 + \mathbf{F}_2 + \mathbf{F}_3$ of the three forces by first finding the resultant $\mathbf{F}' = \mathbf{F}_1 + \mathbf{F}_2$ and then forming $\mathbf{F}_R = \mathbf{F}' + \mathbf{F}_3$.

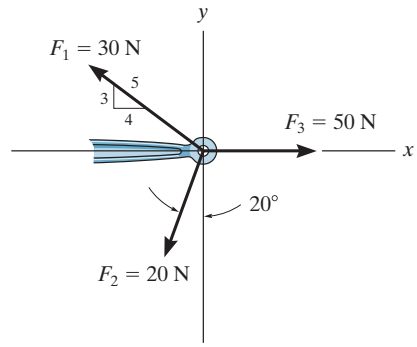

SOLUTION

$$F' = \sqrt{(20)^2 + (30)^2 - 2(20)(30)\cos 73.13^\circ} = 30.85 \text{ N}$$

$$\frac{30.85}{\sin 73.13^\circ} = \frac{30}{\sin(70^\circ - \theta')}; \qquad \theta' = 1.47^\circ$$

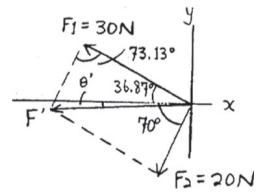

$$F_R = \sqrt{(30.85)^2 + (50)^2 - 2(30.85)(50)\cos 1.47^\circ} = 19.18 = 19.2 \text{ N} \qquad \textbf{Ans.}$$

$$\frac{19.18}{\sin 1.47^\circ} = \frac{30.85}{\sin \theta}; \qquad \theta = 2.37^\circ \measuredangle \qquad \textbf{Ans.}$$

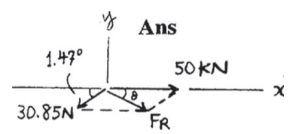

Ans:
$F_R = 19.2$ N
$\theta = 2.37^\circ \measuredangle$

Engineering Mechanics Statics 14th edition Hibbeler Solutions Manual

© 2016 Pearson Education, Inc., Upper Saddle River, NJ. All rights reserved. This material is protected under all copyright laws as they currently exist. No portion of this material may be reproduced, in any form or by any means, without permission in writing from the publisher.

2–18.

Determine the magnitude and direction of the resultant $\mathbf{F}_R = \mathbf{F}_1 + \mathbf{F}_2 + \mathbf{F}_3$ of the three forces by first finding the resultant $\mathbf{F}' = \mathbf{F}_2 + \mathbf{F}_3$ and then forming $\mathbf{F}_R = \mathbf{F}' + \mathbf{F}_1$.

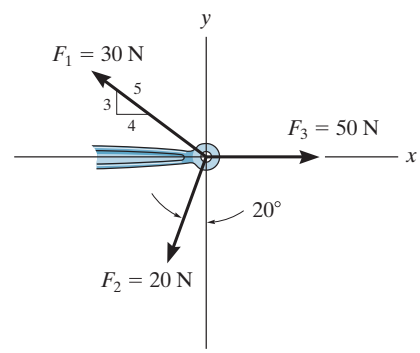

SOLUTION

$$F' = \sqrt{(20)^2 + (50)^2 - 2(20)(50)\cos 70^\circ} = 47.07 \text{ N}$$

$$\frac{20}{\sin\theta'} = \frac{47.07}{\sin 70^\circ}; \qquad \theta' = 23.53^\circ$$

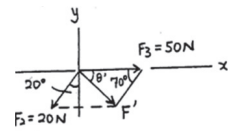

$$F_R = \sqrt{(47.07)^2 + (30)^2 - 2(47.07)(30)\cos 13.34^\circ} = 19.18 = 19.2 \text{ N} \qquad \textbf{Ans.}$$

$$\frac{19.18}{\sin 13.34^\circ} = \frac{30}{\sin\phi}; \qquad \phi = 21.15^\circ$$

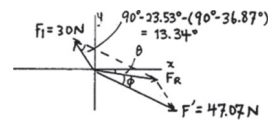

$$\theta = 23.53^\circ - 21.15^\circ = 2.37^\circ \searrow \qquad \textbf{Ans.}$$

Ans:
$F_R = 19.2$ N
$\theta = 2.37^\circ \searrow$

Engineering Mechanics Statics 14th edition Hibbeler Solutions Manual

© 2016 Pearson Education, Inc., Upper Saddle River, NJ. All rights reserved. This material is protected under all copyright laws as they currently exist. No portion of this material may be reproduced, in any form or by any means, without permission in writing from the publisher.

2–19.

Determine the design angle θ ($0° \leq \theta \leq 90°$) for strut AB so that the 400-lb horizontal force has a component of 500 lb directed from A towards C. What is the component of force acting along member AB? Take $\phi = 40°$.

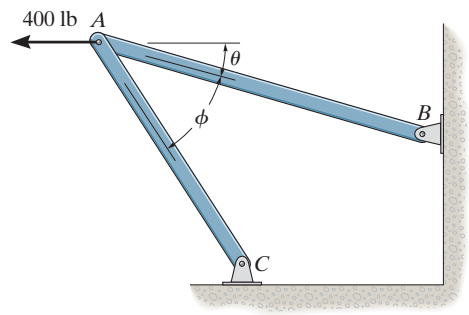

SOLUTION

Parallelogram Law: The parallelogram law of addition is shown in Fig. *a*.

Trigonometry: Using law of sines (Fig. *b*), we have

$$\frac{\sin\theta}{500} = \frac{\sin 40°}{400}$$

$$\sin\theta = 0.8035$$

$$\theta = 53.46° = 53.5° \qquad \textbf{Ans.}$$

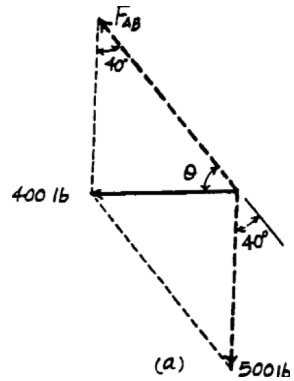

Thus,

$$\psi = 180° - 40° - 53.46° = 86.54°$$

Using law of sines (Fig. *b*)

$$\frac{F_{AB}}{\sin 86.54°} = \frac{400}{\sin 40°}$$

$$F_{AB} = 621 \text{ lb} \qquad \textbf{Ans.}$$

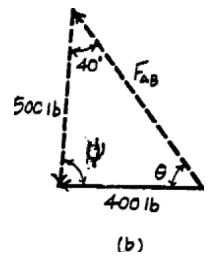

Ans:
$\theta = 53.5°$
$F_{AB} = 621$ lb

Engineering Mechanics Statics 14th edition Hibbeler Solutions Manual

© 2016 Pearson Education, Inc., Upper Saddle River, NJ. All rights reserved. This material is protected under all copyright laws as they currently exist. No portion of this material may be reproduced, in any form or by any means, without permission in writing from the publisher.

***2–20.**

Determine the design angle ϕ $(0° \leq \phi \leq 90°)$ between struts AB and AC so that the 400-lb horizontal force has a component of 600 lb which acts up to the left, in the same direction as from B towards A. Take $\theta = 30°$.

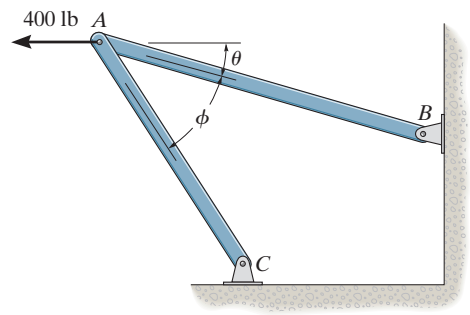

SOLUTION

Parallelogram Law: The parallelogram law of addition is shown in Fig. *a*.

Trigonometry: Using law of cosines (Fig. *b*), we have

$$F_{AC} = \sqrt{400^2 + 600^2 - 2(400)(600)\cos 30°} = 322.97 \text{ lb}$$

The angle ϕ can be determined using law of sines (Fig. *b*).

$$\frac{\sin\phi}{400} = \frac{\sin 30°}{322.97}$$

$$\sin\phi = 0.6193$$

$$\phi = 38.3° \qquad \textbf{Ans.}$$

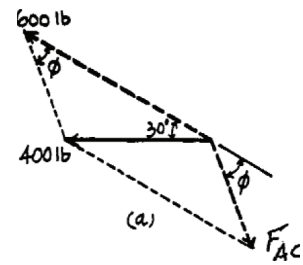

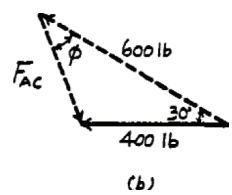

Ans:
$\phi = 38.3°$

Engineering Mechanics Statics 14th edition Hibbeler Solutions Manual

© 2016 Pearson Education, Inc., Upper Saddle River, NJ. All rights reserved. This material is protected under all copyright laws as they currently exist. No portion of this material may be reproduced, in any form or by any means, without permission in writing from the publisher.

2–21.

Determine the magnitude and direction of the resultant force, $\mathbf{F}_R$ measured counterclockwise from the positive x axis. Solve the problem by first finding the resultant $\mathbf{F}' = \mathbf{F}_1 + \mathbf{F}_2$ and then forming $\mathbf{F}_R = \mathbf{F}' + \mathbf{F}_3$.

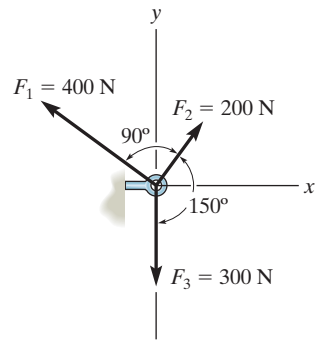

SOLUTION

Parallelogram Law. The parallelogram law of addition for $\mathbf{F}_1$ and $\mathbf{F}_2$ and then their resultant $\mathbf{F}'$ and $\mathbf{F}_3$ are shown in Figs. *a* and *b*, respectively.
Trigonometry. Referring to Fig. *c*,

$$F' = \sqrt{200^2 + 400^2} = 447.21 \text{ N} \qquad \theta' = \tan^{-1}\left(\frac{200}{400}\right) = 26.57°$$

Thus $\phi' = 90° - 30° - 26.57° = 33.43°$

Using these results to apply the law of cosines by referring to Fig. *d*,

$$F_R = \sqrt{300^2 + 447.21^2 - 2(300)(447.21)\cos 33.43°} = 257.05 \text{ N} = 257 \text{ kN} \quad \textbf{Ans.}$$

Then, apply the law of sines,

$$\frac{\sin\theta}{300} = \frac{\sin 33.43°}{257.05}; \qquad \theta = 40.02°$$

Thus, the direction ϕ of $\mathbf{F}_R$ measured counterclockwise from the positive x axis is

$$\phi = 90° + 33.43° + 40.02° = 163.45° = 163° \qquad \textbf{Ans.}$$

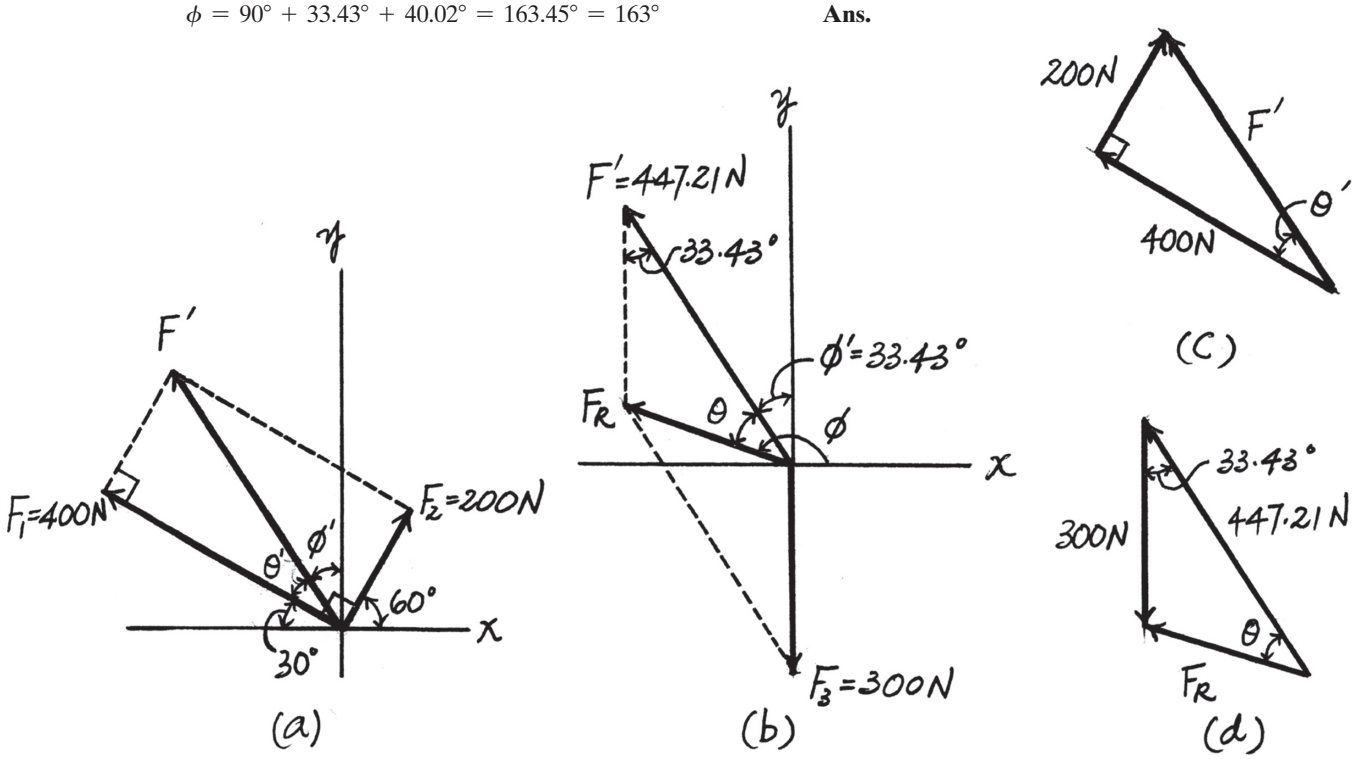

Ans:
$F_R = 257$ N
$\phi = 163°$

Engineering Mechanics Statics 14th edition Hibbeler Solutions Manual

© 2016 Pearson Education, Inc., Upper Saddle River, NJ. All rights reserved. This material is protected under all copyright laws as they currently exist. No portion of this material may be reproduced, in any form or by any means, without permission in writing from the publisher.

2–22.

Determine the magnitude and direction of the resultant force, measured counterclockwise from the positive x axis. Solve l by first finding the resultant $\mathbf{F}' = \mathbf{F}_2 + \mathbf{F}_3$ and then forming $\mathbf{F}_R = \mathbf{F}' + \mathbf{F}_1$.

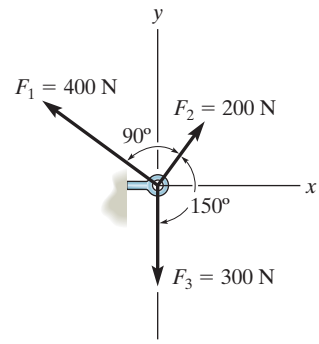

SOLUTION

Parallelogram Law. The parallelogram law of addition for $\mathbf{F}_2$ and $\mathbf{F}_3$ and then their resultant $\mathbf{F}'$ and $\mathbf{F}_1$ are shown in Figs. a and b, respectively.
Trigonometry. Applying the law of cosines by referring to Fig. c,

$$F' = \sqrt{200^2 + 300^2 - 2(200)(300)\cos 30^\circ} = 161.48 \text{ N} \qquad \textbf{Ans.}$$

Using this result to apply the sines law, Fig. c,

$$\frac{\sin\theta'}{200} = \frac{\sin 30^\circ}{161.48}; \qquad \theta' = 38.26^\circ$$

Using the results of $\mathbf{F}'$ and θ' to apply the law of cosines by referring to Fig. d,

$$F_R = \sqrt{161.48^2 + 400^2 - 2(161.48)(400)\cos 21.74^\circ} = 257.05 \text{ N} = 257 \text{ N} \qquad \textbf{Ans.}$$

Then, apply the sines law,

$$\frac{\sin\theta}{161.48} = \frac{\sin 21.74^\circ}{257.05}; \qquad \theta = 13.45^\circ$$

Thus, the direction ϕ of $\mathbf{F}_R$ measured counterclockwise from the positive x axis is

$$\phi = 90^\circ + 60^\circ + 13.45^\circ = 163.45^\circ = 163^\circ \qquad \textbf{Ans.}$$

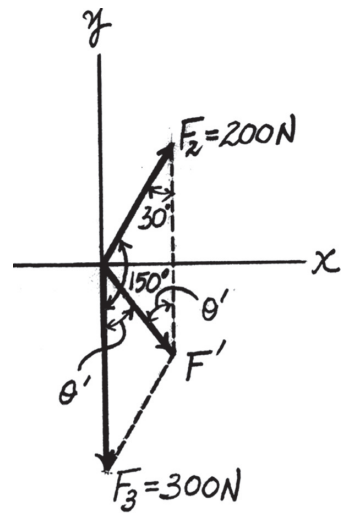

(a)

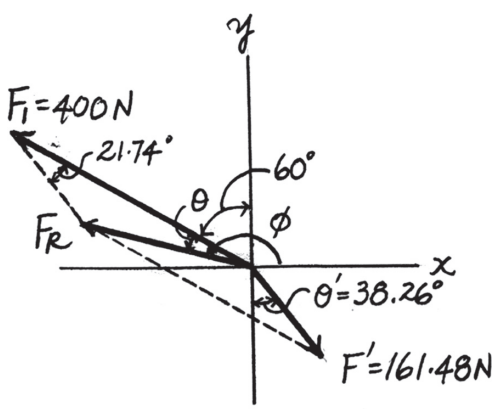

(b)

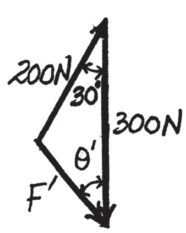

(c)

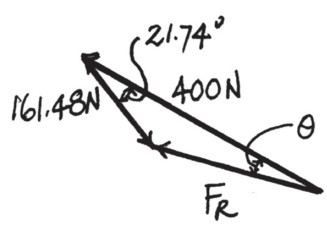

(d)

Ans:
$\phi = 163^\circ$
$F_R = 257$ N

Engineering Mechanics Statics 14th edition Hibbeler Solutions Manual

© 2016 Pearson Education, Inc., Upper Saddle River, NJ. All rights reserved. This material is protected under all copyright laws as they currently exist. No portion of this material may be reproduced, in any form or by any means, without permission in writing from the publisher.

2–23.

Two forces act on the screw eye. If $F_1 = 400\text{ N}$ and $F_2 = 600\text{ N}$, determine the angle $\theta (0° \le \theta \le 180°)$ between them, so that the resultant force has a magnitude of $F_R = 800\text{ N}$.

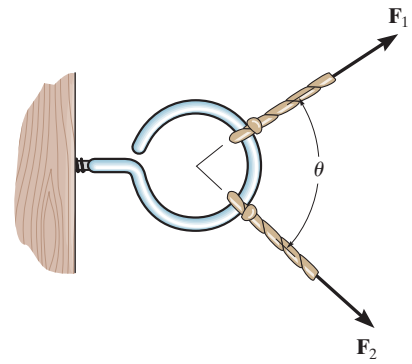

SOLUTION

The parallelogram law of addition and triangular rule are shown in Figs. *a* and *b*, respectively. Applying law of cosines to Fig. *b*,

$$800 = \sqrt{400^2 + 600^2 - 2(400)(600)\cos(180° - \theta°)}$$

$$800^2 = 400^2 + 600^2 - 480000\cos(180° - \theta)$$

$$\cos(180° - \theta) = -0.25$$

$$180° - \theta = 104.48$$

$$\theta = 75.52° = 75.5° \qquad \textbf{Ans.}$$

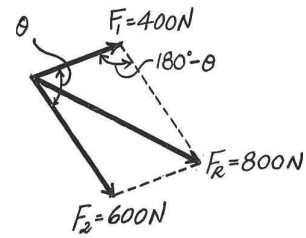

(a)

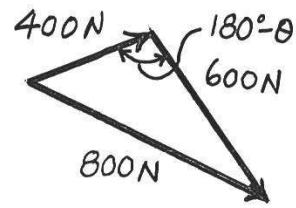

(b)

Ans:
$\theta = 75.5°$

Engineering Mechanics Statics 14th edition Hibbeler Solutions Manual

© 2016 Pearson Education, Inc., Upper Saddle River, NJ. All rights reserved. This material is protected under all copyright laws as they currently exist. No portion of this material may be reproduced, in any form or by any means, without permission in writing from the publisher.

***2–24.**

Two forces $\mathbf{F}_1$ and $\mathbf{F}_2$ act on the screw eye. If their lines of action are at an angle θ apart and the magnitude of each force is $F_1 = F_2 = F$, determine the magnitude of the resultant force $\mathbf{F}_R$ and the angle between $\mathbf{F}_R$ and $\mathbf{F}_1$.

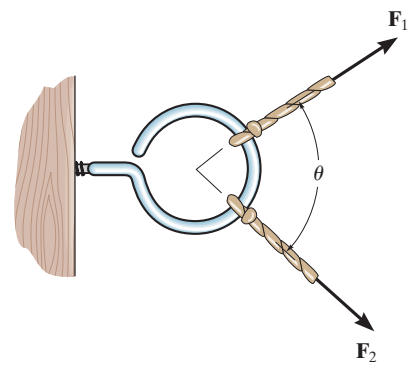

SOLUTION

$$\frac{F}{\sin\phi} = \frac{F}{\sin(\theta - \phi)}$$

$$\sin(\theta - \phi) = \sin\phi$$

$$\theta - \phi = \phi$$

$$\phi = \frac{\theta}{2}$$ **Ans.**

$$F_R = \sqrt{(F)^2 + (F)^2 - 2(F)(F)\cos(180° - \theta)}$$

Since $\cos(180° - \theta) = -\cos\theta$

$$F_R = F\left(\sqrt{2}\right)\sqrt{1 + \cos\theta}$$

Since $\cos\left(\frac{\theta}{2}\right) = \sqrt{\frac{1 + \cos\theta}{2}}$

Then

$$F_R = 2F\cos\left(\frac{\theta}{2}\right)$$ **Ans.**

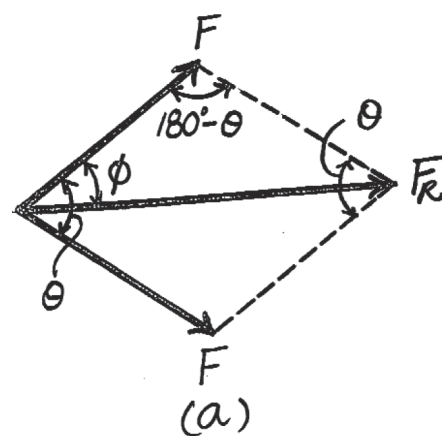

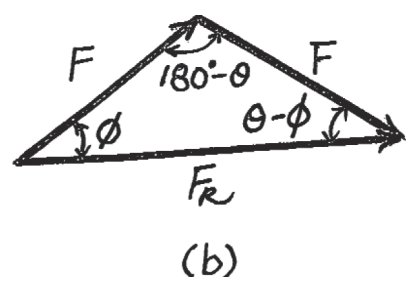

Ans:

$\phi = \frac{\theta}{2}$

$F_R = 2F\cos\left(\frac{\theta}{2}\right)$

Engineering Mechanics Statics 14th edition Hibbeler Solutions Manual

© 2016 Pearson Education, Inc., Upper Saddle River, NJ. All rights reserved. This material is protected under all copyright laws as they currently exist. No portion of this material may be reproduced, in any form or by any means, without permission in writing from the publisher.

2–25.

If $F_1 = 30$ lb and $F_2 = 40$ lb, determine the angles θ and ϕ so that the resultant force is directed along the positive x axis and has a magnitude of $F_R = 60$ lb.

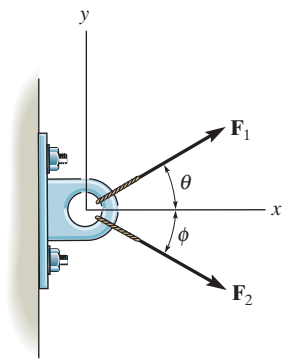

SOLUTION

Parallelogram Law. The parallelogram law of addition is shown in Fig. *a*,
Trigonometry. Applying the law of cosine by referring to Fig. *b*,

$$40^2 = 30^2 + 60^2 - 2(30)(60)\cos\theta$$

$$\theta = 36.34° = 36.3° \qquad \textbf{Ans.}$$

And

$$30^2 = 40^2 + 60^2 - 2(40)(60)\cos\phi$$

$$\phi = 26.38° = 26.4° \qquad \textbf{Ans.}$$

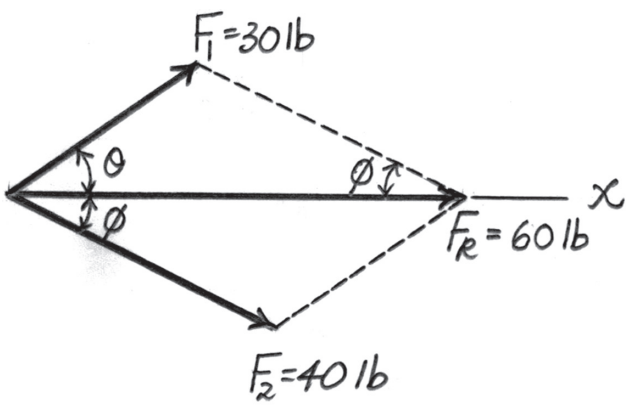

(a)

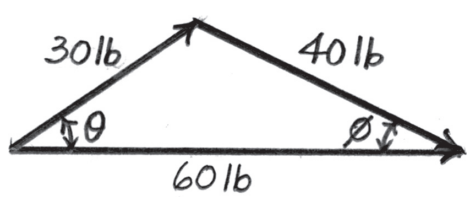

(b)

Ans:
$\theta = 36.3°$
$\phi = 26.4°$

Engineering Mechanics Statics 14th edition Hibbeler Solutions Manual

© 2016 Pearson Education, Inc., Upper Saddle River, NJ. All rights reserved. This material is protected under all copyright laws as they currently exist. No portion of this material may be reproduced, in any form or by any means, without permission in writing from the publisher.

2–26.

Determine the magnitude and direction θ of $\mathbf{F}_A$ so that the resultant force is directed along the positive x axis and has a magnitude of 1250 N.

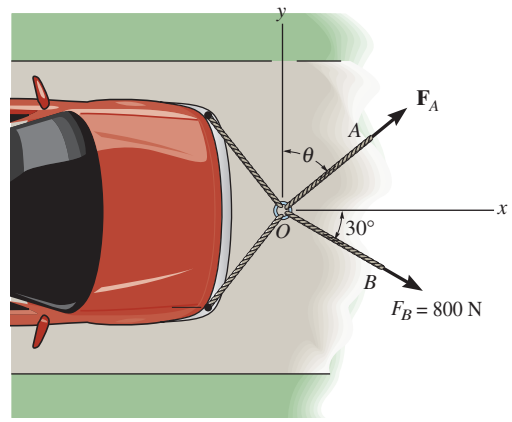

SOLUTION

$\overset{+}{\rightarrow} F_{R_x} = \Sigma F_x;$ $\quad F_{R_x} = F_A \sin\theta + 800\cos 30° = 1250$

$+\uparrow F_{R_y} = \Sigma F_y;$ $\quad F_{R_y} = F_A \cos\theta - 800 \sin 30° = 0$

$\theta = 54.3°$ **Ans.**

$F_A = 686 \text{ N}$ **Ans.**

Ans:
$\theta = 54.3°$
$F_A = 686 \text{ N}$

Engineering Mechanics Statics 14th edition Hibbeler Solutions Manual

© 2016 Pearson Education, Inc., Upper Saddle River, NJ. All rights reserved. This material is protected under all copyright laws as they currently exist. No portion of this material may be reproduced, in any form or by any means, without permission in writing from the publisher.

2–27.

Determine the magnitude and direction, measured counterclockwise from the positive x axis, of the resultant force acting on the ring at O, if $F_A = 750$ N and $\theta = 45°$.

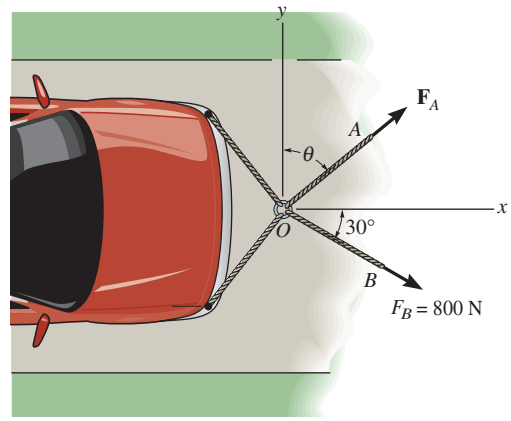

SOLUTION

Scalar Notation: Suming the force components algebraically, we have

$\xrightarrow{+} F_{R_x} = \Sigma F_x; \qquad F_{R_x} = 750 \sin 45° + 800 \cos 30°$

$= 1223.15 \text{ N} \rightarrow$

$+\uparrow F_{R_y} = \Sigma F_y; \qquad F_{R_y} = 750 \cos 45° - 800 \sin 30°$

$= 130.33 \text{ N} \uparrow$

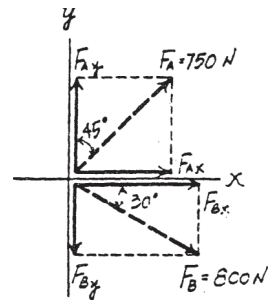

The magnitude of the resultant force $\mathbf{F}_R$ is

$$F_R = \sqrt{F_{R_x}^2 + F_{R_y}^2}$$

$$= \sqrt{1223.15^2 + 130.33^2} = 1230 \text{ N} = 1.23 \text{ kN} \qquad \textbf{Ans.}$$

The directional angle θ measured counterclockwise from positive x axis is

$$\theta = \tan^{-1}\frac{F_{R_y}}{F_{R_x}} = \tan^{-1}\left(\frac{130.33}{1223.15}\right) = 6.08° \qquad \textbf{Ans.}$$

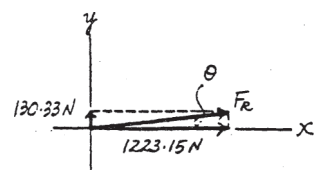

Ans:
$F_R = 1.23$ kN
$\theta = 6.08°$

Engineering Mechanics Statics 14th edition Hibbeler Solutions Manual

© 2016 Pearson Education, Inc., Upper Saddle River, NJ. All rights reserved. This material is protected under all copyright laws as they currently exist. No portion of this material may be reproduced, in any form or by any means, without permission in writing from the publisher.

***2–28.**

Determine the magnitude of force **F** so that the resultant $\mathbf{F}_R$ of the three forces is as small as possible. What is the minimum magnitude of $\mathbf{F}_R$?.

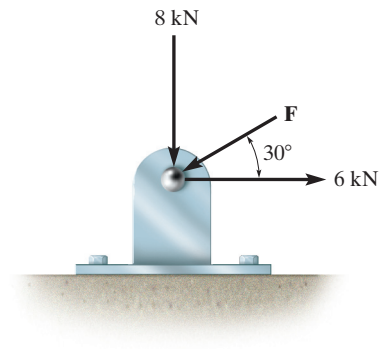

SOLUTION

Parallelogram Law. The parallelogram laws of addition for 6 kN and 8 kN and then their resultant F' and F are shown in Figs. *a* and *b*, respectively. In order for F_R to be minimum, it must act perpendicular to **F**.

Trigonometry. Referring to Fig. *b*,

$$F' = \sqrt{6^2 + 8^2} = 10.0 \text{ kN} \qquad \theta = \tan^{-1}\left(\frac{8}{6}\right) = 53.13°.$$

Referring to Figs. *c* and *d*,

$$F_R = 10.0 \sin 83.13° = 9.928 \text{ kN} = 9.93 \text{ kN} \qquad \textbf{Ans.}$$

$$F = 10.0 \cos 83.13° = 1.196 \text{ kN} = 1.20 \text{ kN} \qquad \textbf{Ans.}$$

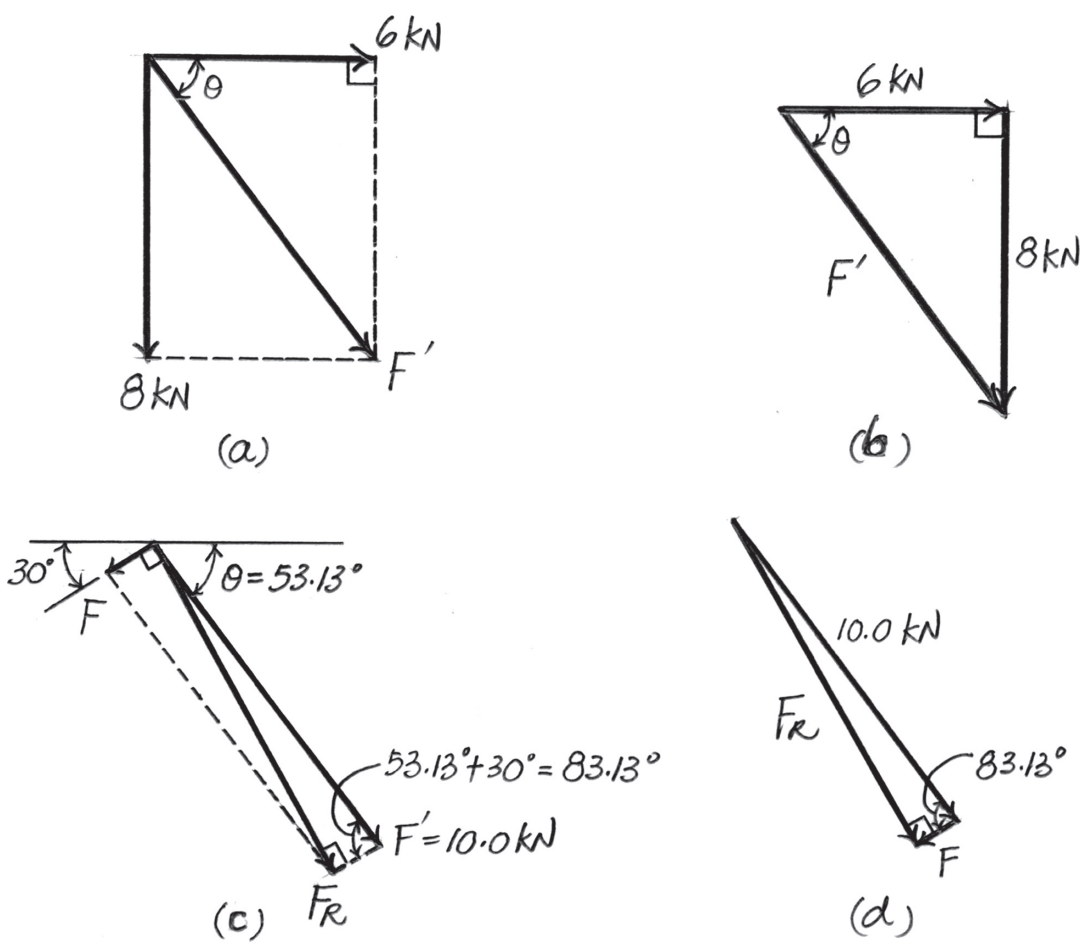

Ans:
$F_R = 9.93$ kN
$F = 1.20$ kN

Engineering Mechanics Statics 14th edition Hibbeler Solutions Manual

© 2016 Pearson Education, Inc., Upper Saddle River, NJ. All rights reserved. This material is protected under all copyright laws as they currently exist. No portion of this material may be reproduced, in any form or by any means, without permission in writing from the publisher.

2–29.

If the resultant force of the two tugboats is 3 kN, directed along the positive x axis, determine the required magnitude of force $\mathbf{F}_B$ and its direction θ.

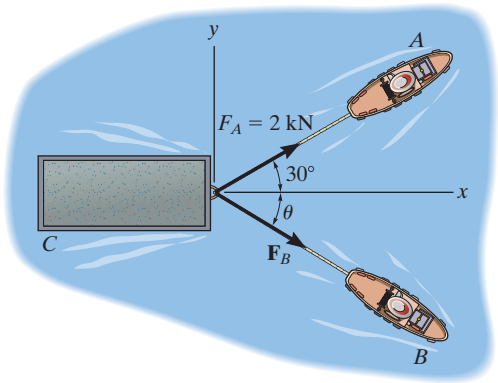

SOLUTION

The parallelogram law of addition and the triangular rule are shown in Figs. a and b, respectively.

Applying the law of cosines to Fig. b,

$$F_B = \sqrt{2^2 + 3^2 - 2(2)(3)\cos 30^\circ}$$

$$= 1.615\text{kN} = 1.61 \text{ kN} \qquad \textbf{Ans.}$$

Using this result and applying the law of sines to Fig. b, yields

$$\frac{\sin\theta}{2} = \frac{\sin 30^\circ}{1.615} \qquad \theta = 38.3^\circ \qquad \textbf{Ans.}$$

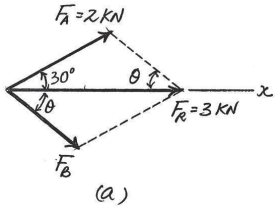

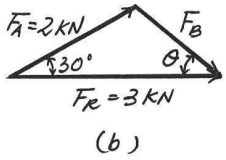

Ans:
$F_B = 1.61$ kN
$\theta = 38.3^\circ$

Engineering Mechanics Statics 14th edition Hibbeler Solutions Manual

© 2016 Pearson Education, Inc., Upper Saddle River, NJ. All rights reserved. This material is protected under all copyright laws as they currently exist. No portion of this material may be reproduced, in any form or by any means, without permission in writing from the publisher.

2–30.

If $F_B = 3$ kN and $\theta = 45°$, determine the magnitude of the resultant force of the two tugboats and its direction measured clockwise from the positive x axis.

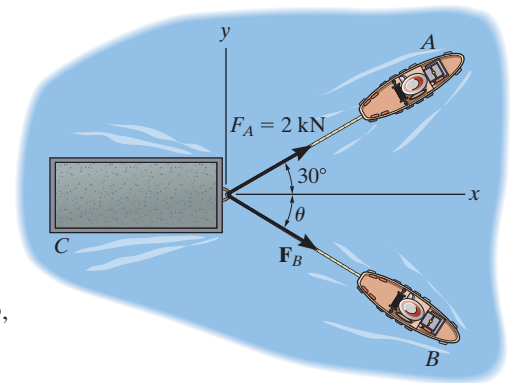

SOLUTION

The parallelogram law of addition and the triangular rule are shown in Figs. *a* and *b*, respectively.

Applying the law of cosines to Fig. *b*,

$$F_R = \sqrt{2^2 + 3^2 - 2(2)(3)\cos 105°}$$

$$= 4.013 \text{ kN} = 4.01 \text{ kN} \qquad \textbf{Ans.}$$

Using this result and applying the law of sines to Fig. *b*, yields

$$\frac{\sin \alpha}{3} = \frac{\sin 105°}{4.013} \qquad \alpha = 46.22°$$

Thus, the direction angle ϕ of $\mathbf{F}_R$, measured clockwise from the positive x axis, is

$$\phi = \alpha - 30° = 46.22° - 30° = 16.2° \qquad \textbf{Ans.}$$

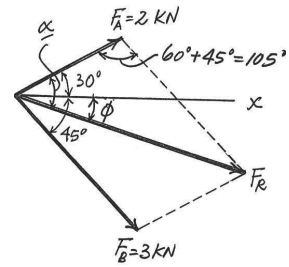

(a)

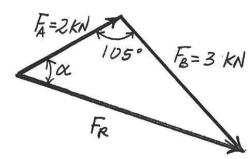

(b)

Ans:
$F_R = 4.01$ kN
$\phi = 16.2°$

Engineering Mechanics Statics 14th edition Hibbeler Solutions Manual

© 2016 Pearson Education, Inc., Upper Saddle River, NJ. All rights reserved. This material is protected under all copyright laws as they currently exist. No portion of this material may be reproduced, in any form or by any means, without permission in writing from the publisher.

2–31.

If the resultant force of the two tugboats is required to be directed towards the positive x axis, and F_B is to be a minimum, determine the magnitude of $\mathbf{F}_R$ and $\mathbf{F}_B$ and the angle θ.

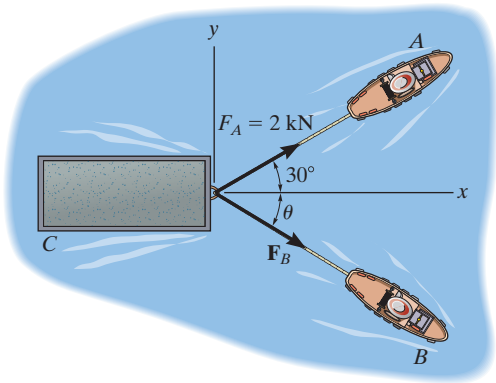

SOLUTION

For $\mathbf{F}_B$ to be minimum, it has to be directed perpendicular to $\mathbf{F}_R$. Thus,

$$\theta = 90^\circ \qquad \textbf{Ans.}$$

The parallelogram law of addition and triangular rule are shown in Figs. a and b, respectively.

By applying simple trigonometry to Fig. b,

$$F_B = 2 \sin 30^\circ = 1 \text{ kN} \qquad \textbf{Ans.}$$

$$F_R = 2 \cos 30^\circ = 1.73 \text{ kN} \qquad \textbf{Ans.}$$

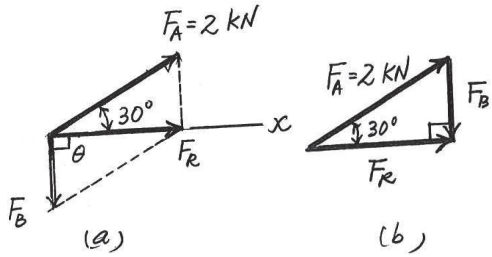

Ans:
$\theta = 90^\circ$
$F_B = 1$ kN
$F_R = 1.73$ kN

Engineering Mechanics Statics 14th edition Hibbeler Solutions Manual

© 2016 Pearson Education, Inc., Upper Saddle River, NJ. All rights reserved. This material is protected under all copyright laws as they currently exist. No portion of this material may be reproduced, in any form or by any means, without permission in writing from the publisher.

***2–32.**

Determine the magnitude of the resultant force and its direction, measured counterclockwise from the positive x axis.

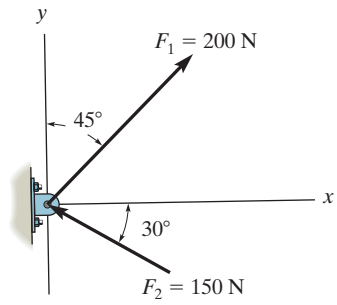

SOLUTION

Scalar Notation. Summing the force components along x and y axes algebraically by referring to Fig. a,

$$\overset{+}{\rightarrow} (F_R)_x = \Sigma F_x; \qquad (F_R)_x = 200 \sin 45° - 150 \cos 30° = 11.518 \text{ N} \rightarrow$$

$$+\uparrow (F_R)_y = \Sigma F_y; \qquad (F_R)_y = 200 \cos 45° + 150 \sin 30° = 216.42 \text{ N} \uparrow$$

Referring to Fig. b, the magnitude of the resultant force F_R is

$$F_R = \sqrt{(F_R)_x^2 + (F_R)_y^2} = \sqrt{11.518^2 + 216.42^2} = 216.73 \text{ N} = 217 \text{ N} \qquad \textbf{Ans.}$$

And the directional angle θ of $\mathbf{F}_R$ measured counterclockwise from the positive x axis is

$$\theta = \tan^{-1}\left[\frac{(F_R)_y}{(F_R)_x}\right] = \tan^{-1}\left(\frac{216.42}{11.518}\right) = 86.95° = 87.0° \qquad \textbf{Ans.}$$

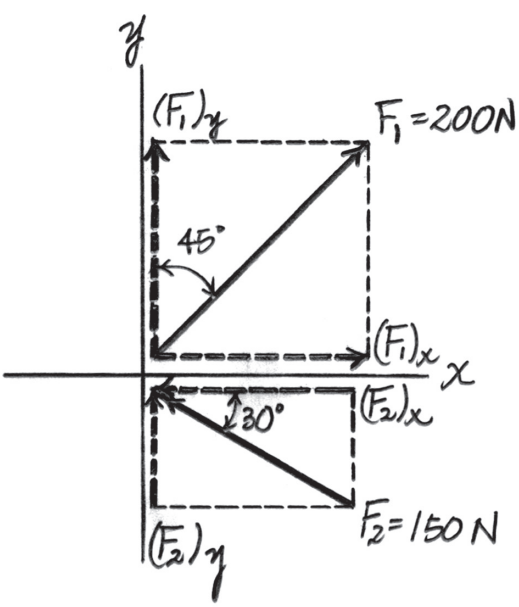

(a)

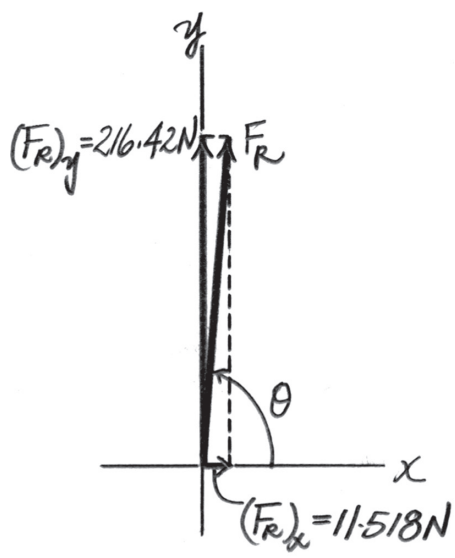

(b)

Ans:
$F_R = 217$ N
$\theta = 87.0°$

Engineering Mechanics Statics 14th edition Hibbeler Solutions Manual

© 2016 Pearson Education, Inc., Upper Saddle River, NJ. All rights reserved. This material is protected under all copyright laws as they currently exist. No portion of this material may be reproduced, in any form or by any means, without permission in writing from the publisher.

2–33.

Determine the magnitude of the resultant force and its direction, measured clockwise from the positive x axis.

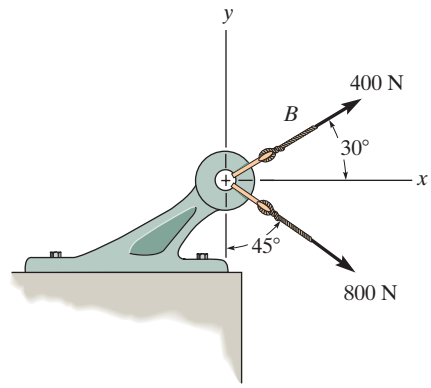

SOLUTION

Scalar Notation. Summing the force components along x and y axes by referring to Fig. a,

$$\overset{+}{\rightarrow} (F_R)_x = \Sigma F_x; \quad (F_R)_x = 400 \cos 30° + 800 \sin 45° = 912.10 \text{ N} \rightarrow$$

$$+\uparrow (F_R)_y = \Sigma F_y; \quad (F_R)_y = 400 \sin 30° - 800 \cos 45° = -365.69 \text{ N} = 365.69 \text{ N}\downarrow$$

Referring to Fig. b, the magnitude of the resultant force is

$$F_R = \sqrt{(F_R)_x^2 + (F_R)_y^2} = \sqrt{912.10^2 + 365.69^2} = 982.67 \text{ N} = 983 \text{ N} \qquad \textbf{Ans.}$$

And its directional angle θ measured clockwise from the positive x axis is

$$\theta = \tan^{-1}\left[\frac{(F_R)_y}{(F_R)_x}\right] = \tan^{-1}\left(\frac{365.69}{912.10}\right) = 21.84° = 21.8° \qquad \textbf{Ans.}$$

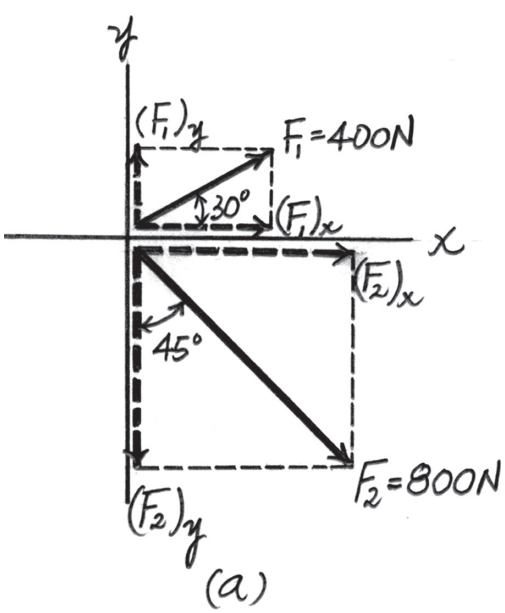

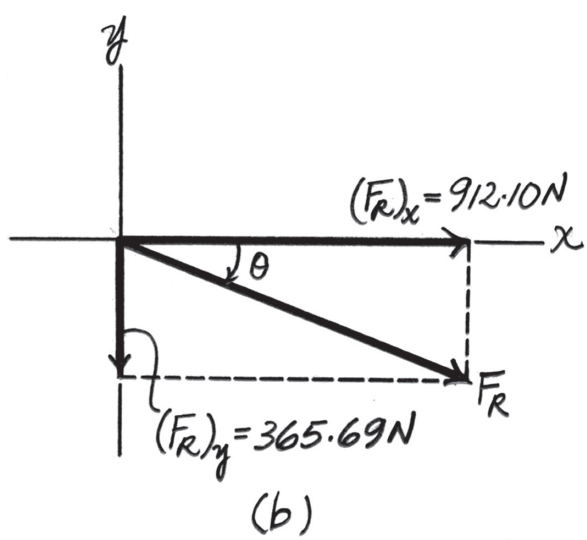

Ans:
$F_R = 983$ N
$\theta = 21.8°$

Engineering Mechanics Statics 14th edition Hibbeler Solutions Manual

© 2016 Pearson Education, Inc., Upper Saddle River, NJ. All rights reserved. This material is protected under all copyright laws as they currently exist. No portion of this material may be reproduced, in any form or by any means, without permission in writing from the publisher.

2–34.

Resolve $\mathbf{F}_1$ and $\mathbf{F}_2$ into their x and y components.

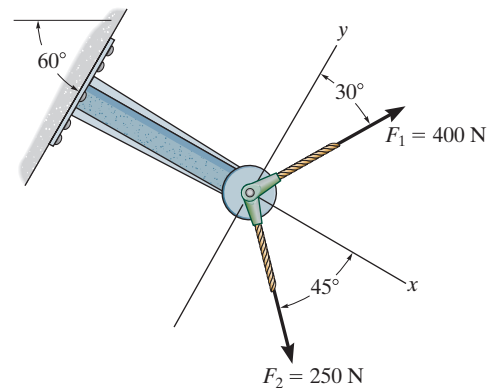

SOLUTION

$$\mathbf{F}_1 = \{400 \sin 30°(+\mathbf{i}) + 400 \cos 30°(+\mathbf{j})\}\ \text{N}$$

$$= \{200\mathbf{i} + 346\mathbf{j}\}\ \text{N} \qquad \textbf{Ans.}$$

$$\mathbf{F}_2 = \{250 \cos 45°(+\mathbf{i}) + 250 \sin 45°(-\mathbf{j})\}\ \text{N}$$

$$= \{177\mathbf{i} - 177\mathbf{j}\}\ \text{N} \qquad \textbf{Ans.}$$

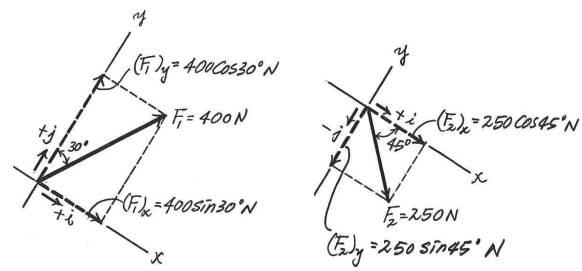

Ans:
$\mathbf{F}_1 = \{200\mathbf{i} + 346\mathbf{j}\}$ N
$\mathbf{F}_2 = \{177\mathbf{i} - 177\mathbf{j}\}$ N

Engineering Mechanics Statics 14th edition Hibbeler Solutions Manual

© 2016 Pearson Education, Inc., Upper Saddle River, NJ. All rights reserved. This material is protected under all copyright laws as they currently exist. No portion of this material may be reproduced, in any form or by any means, without permission in writing from the publisher.

2–35.

Determine the magnitude of the resultant force and its direction measured counterclockwise from the positive x axis.

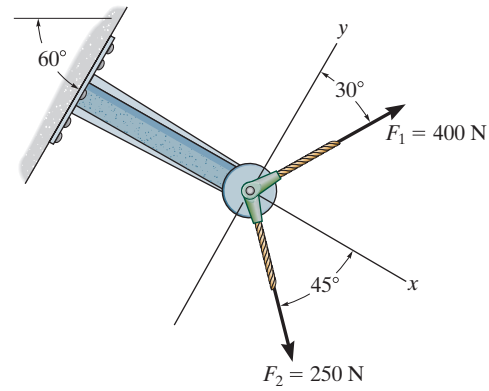

SOLUTION

Rectangular Components: By referring to Fig. a, the x and y components of $\mathbf{F}_1$ and $\mathbf{F}_2$ can be written as

$$(F_1)_x = 400 \sin 30° = 200 \text{ N} \qquad (F_1)_y = 400 \cos 30° = 346.41 \text{ N}$$

$$(F_2)_x = 250 \cos 45° = 176.78 \text{ N} \qquad (F_2)_y = 250 \sin 45° = 176.78 \text{ N}$$

Resultant Force: Summing the force components algebraically along the x and y axes, we have

$$\overset{+}{\rightarrow} \Sigma(F_R)_x = \Sigma F_x; \qquad (F_R)_x = 200 + 176.78 = 376.78 \text{ N} \qquad \textbf{Ans.}$$

$$+\uparrow \Sigma(F_R)_y = \Sigma F_y; \qquad (F_R)_y = 346.41 - 176.78 = 169.63 \text{ N} \uparrow$$

The magnitude of the resultant force $\mathbf{F}_R$ is

$$F_R = \sqrt{(F_R)_x^2 + (F_R)_y^2} = \sqrt{376.78^2 + 169.63^2} = 413 \text{ N} \qquad \textbf{Ans.}$$

The direction angle θ of $\mathbf{F}_R$, Fig. b, measured counterclockwise from the positive axis, is

$$\theta = \tan^{-1}\left[\frac{(F_R)_y}{(F_R)_x}\right] = \tan^{-1}\left(\frac{169.63}{376.78}\right) = 24.2° \qquad \textbf{Ans.}$$

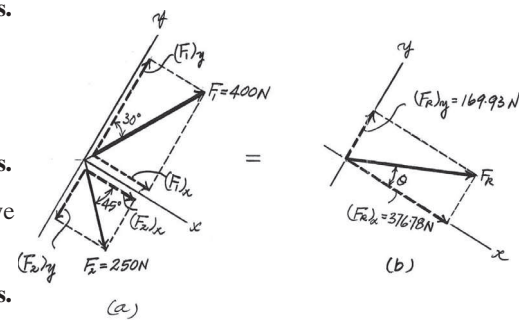

Ans:
$F_R = 413$ N
$\theta = 24.2°$

Engineering Mechanics Statics 14th edition Hibbeler Solutions Manual

© 2016 Pearson Education, Inc., Upper Saddle River, NJ. All rights reserved. This material is protected under all copyright laws as they currently exist. No portion of this material may be reproduced, in any form or by any means, without permission in writing from the publisher.

***2–36.**

Resolve each force acting on the *gusset plate* into its x and y components, and express each force as a Cartesian vector.

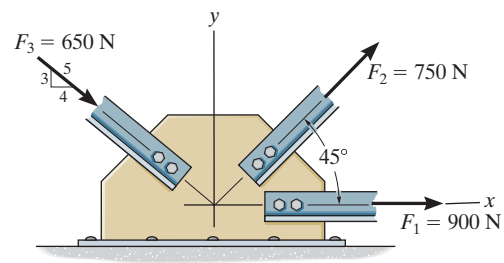

$$\mathbf{F}_1 = \{900(+\mathbf{i})\} = \{900\mathbf{i}\}\text{ N}$$ **Ans.**

$$\mathbf{F}_2 = \{750\cos 45°(+\mathbf{i}) + 750\sin 45°(+\mathbf{j})\}\text{ N}$$
$$= \{530\mathbf{i} + 530\mathbf{j}\}\text{ N}$$ **Ans.**

$$\mathbf{F}_3 = \left\{650\left(\frac{4}{5}\right)(+\mathbf{i}) + 650\left(\frac{3}{5}\right)(-\mathbf{j})\right\}\text{ N}$$
$$= \{520\,\mathbf{i} - 390\mathbf{j})\}\text{ N}$$ **Ans.**

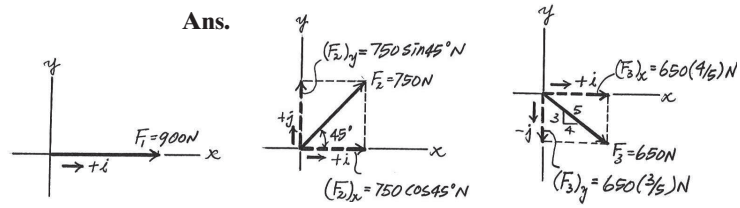

Ans:
$\mathbf{F}_1 = \{900\mathbf{i}\}$ N
$\mathbf{F}_2 = \{530\mathbf{i} + 530\mathbf{j}\}$ N
$\mathbf{F}_3 = \{520\mathbf{i} - 390\mathbf{j}\}$ N

Engineering Mechanics Statics 14th edition Hibbeler Solutions Manual

© 2016 Pearson Education, Inc., Upper Saddle River, NJ. All rights reserved. This material is protected under all copyright laws as they currently exist. No portion of this material may be reproduced, in any form or by any means, without permission in writing from the publisher.

2–37.

Determine the magnitude of the resultant force acting on the plate and its direction, measured counterclockwise from the positive x axis.

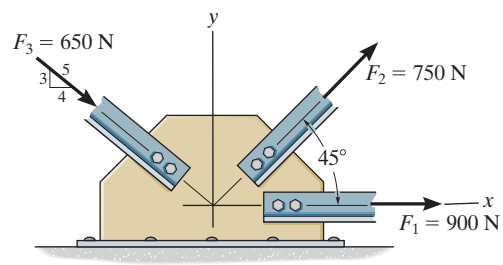

SOLUTION

Rectangular Components: By referring to Fig. a, the x and y components of $\mathbf{F}_1$, $\mathbf{F}_2$, and $\mathbf{F}_3$ can be written as

$$(F_1)_x = 900 \text{ N} \qquad (F_1)_y = 0$$

$$(F_2)_x = 750 \cos 45° = 530.33 \text{ N} \qquad (F_2)_y = 750 \sin 45° = 530.33 \text{ N}$$

$$(F_3)_x = 650\left(\frac{4}{5}\right) = 520 \text{ N} \qquad (F_3)_y = 650\left(\frac{3}{5}\right) = 390 \text{ N}$$

Resultant Force: Summing the force components algebraically along the x and y axes, we have

$$\overset{+}{\rightarrow} \Sigma(F_R)_x = \Sigma F_x; \qquad (F_R)_x = 900 + 530.33 + 520 = 1950.33 \text{ N} \rightarrow$$

$$+\uparrow \Sigma(F_R)_y = \Sigma F_y; \qquad (F_R)_y = 530.33 - 390 = 140.33 \text{ N} \uparrow$$

The magnitude of the resultant force $\mathbf{F}_R$ is

$$F_R = \sqrt{(F_R)_x^2 + (F_R)_y^2} = \sqrt{1950.33^2 + 140.33^2} = 1955 \text{ N} = 1.96 \text{ kN} \quad \textbf{Ans.}$$

The direction angle θ of $\mathbf{F}_R$, measured clockwise from the positive x axis, is

$$\theta = \tan^{-1}\left[\frac{(F_R)_y}{(F_R)_x}\right] = \tan^{-1}\left(\frac{140.33}{1950.33}\right) = 4.12° \quad \textbf{Ans.}$$

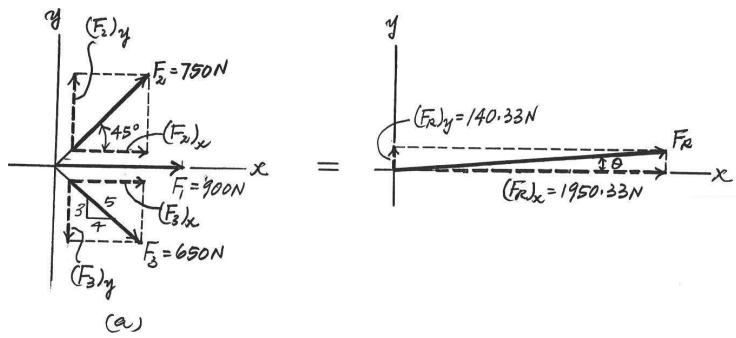

Ans:
$F_R = 1.96$ kN
$\theta = 4.12°$

Engineering Mechanics Statics 14th edition Hibbeler Solutions Manual

© 2016 Pearson Education, Inc., Upper Saddle River, NJ. All rights reserved. This material is protected under all copyright laws as they currently exist. No portion of this material may be reproduced, in any form or by any means, without permission in writing from the publisher.

2–38.

Express each of the three forces acting on the support in Cartesian vector form and determine the magnitude of the resultant force and its direction, measured clockwise from positive x axis.

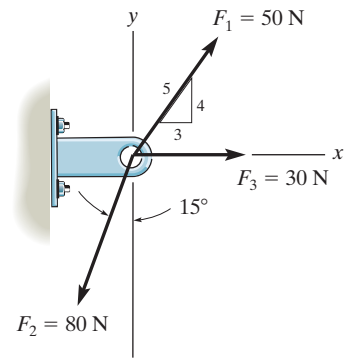

SOLUTION

Cartesian Notation. Referring to Fig. a,

$$\mathbf{F}_1 = (F_1)_x\,\mathbf{i} + (F_1)_y\,\mathbf{j} = 50\left(\frac{3}{5}\right)\mathbf{i} + 50\left(\frac{4}{5}\right)\mathbf{j} = \{30\,\mathbf{i} + 40\,\mathbf{j}\}\text{ N} \qquad \textbf{Ans.}$$

$$\mathbf{F}_2 = -(F_2)_x\,\mathbf{i} - (F_2)_y\,\mathbf{j} = -80\sin 15°\,\mathbf{i} - 80\cos 15°\,\mathbf{j}$$

$$= \{-20.71\,\mathbf{i} - 77.27\,\mathbf{j}\}\text{ N}$$

$$= \{-20.7\,\mathbf{i} - 77.3\,\mathbf{j}\}\text{ N} \qquad \textbf{Ans.}$$

$$F_3 = (F_3)_x\,\mathbf{i} = \{30\,\mathbf{i}\} \qquad \textbf{Ans.}$$

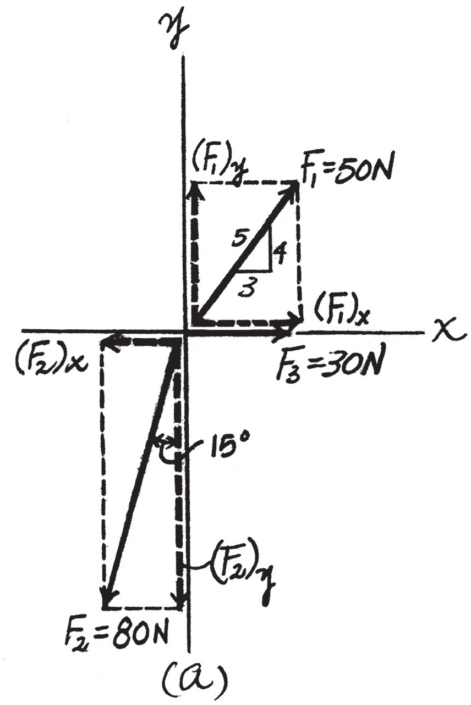

Thus, the resultant force is

$$\mathbf{F}_R = \Sigma\mathbf{F}; \qquad \mathbf{F}_R = \mathbf{F}_1 + \mathbf{F}_2 + \mathbf{F}_3$$

$$= (30\mathbf{i} + 40\,\mathbf{j}) + (-20.71\mathbf{i} - 77.27\mathbf{j}) + 30\mathbf{i}$$

$$= \{39.29\,\mathbf{i} - 37.27\,\mathbf{j}\}\text{ N}$$

Referring to Fig. b, the magnitude of $\mathbf{F}_R$ is

$$F_R = \sqrt{39.29^2 + 37.27^2} = 54.16\text{ N} = 54.2\text{ N} \qquad \textbf{Ans.}$$

And its directional angle θ measured clockwise from the positive x axis is

$$\theta = \tan^{-1}\left(\frac{37.27}{39.29}\right) = 43.49° - 43.5° \qquad \textbf{Ans.}$$

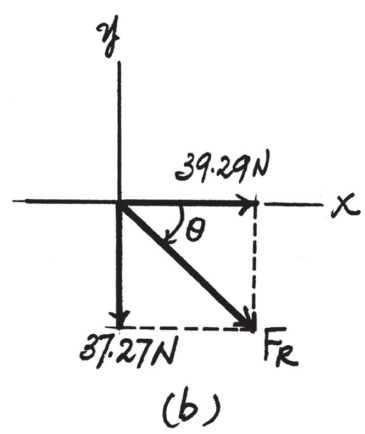

Ans:
$\mathbf{F}_1 = \{30\mathbf{i} + 40\mathbf{j}\}$ N
$\mathbf{F}_2 = \{-20.7\,\mathbf{i} - 77.3\,\mathbf{j}\}$ N
$F_3 = \{30\,\mathbf{i}\}$
$F_R = 54.2$ N
$\theta = 43.5°$

Engineering Mechanics Statics 14th edition Hibbeler Solutions Manual

© 2016 Pearson Education, Inc., Upper Saddle River, NJ. All rights reserved. This material is protected under all copyright laws as they currently exist. No portion of this material may be reproduced, in any form or by any means, without permission in writing from the publisher.

2–39.

Determine the x and y components of $\mathbf{F}_1$ and $\mathbf{F}_2$.

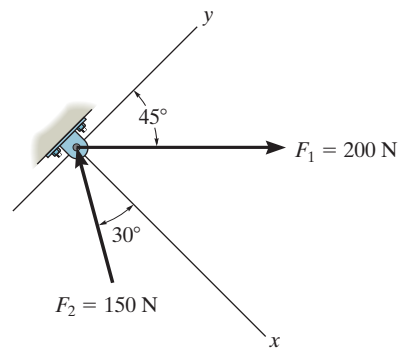

SOLUTION

$F_{1x} = 200 \sin 45° = 141 \text{ N}$ **Ans.**

$F_{1y} = 200 \cos 45° = 141 \text{ N}$ **Ans.**

$F_{2x} = -150 \cos 30° = -130 \text{ N}$ **Ans.**

$F_{2y} = 150 \sin 30° = 75 \text{ N}$ **Ans.**

Ans:
$F_{1x} = 141 \text{ N}$
$F_{1y} = 141 \text{ N}$
$F_{2x} = -130 \text{ N}$
$F_{2y} = 75 \text{ N}$

Engineering Mechanics Statics 14th edition Hibbeler Solutions Manual

© 2016 Pearson Education, Inc., Upper Saddle River, NJ. All rights reserved. This material is protected under all copyright laws as they currently exist. No portion of this material may be reproduced, in any form or by any means, without permission in writing from the publisher.

***2–40.**

Determine the magnitude of the resultant force and its direction, measured counterclockwise from the positive x axis.

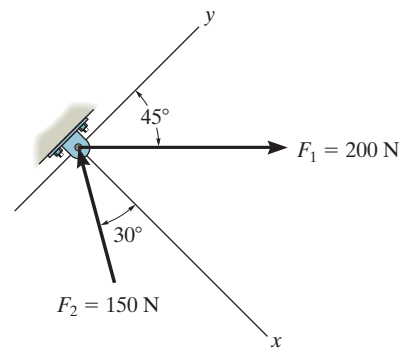

SOLUTION

$+\searrow F_{Rx} = \Sigma F_x; \qquad F_{Rx} = -150\cos 30° + 200\sin 45° = 11.518\text{ N}$

$\nearrow + F_{Ry} = \Sigma F_y; \qquad F_{Ry} = 150\sin 30° + 200\cos 45° = 216.421\text{ N}$

$F_R = \sqrt{(11.518)^2 + (216.421)^2} = 217\text{ N}$ **Ans.**

$\theta = \tan^{-1}\left(\dfrac{216.421}{11.518}\right) = 87.0°$ **Ans.**

Ans:
$F_R = 217$ N
$\theta = 87.0°$

Engineering Mechanics Statics 14th edition Hibbeler Solutions Manual

© 2016 Pearson Education, Inc., Upper Saddle River, NJ. All rights reserved. This material is protected under all copyright laws as they currently exist. No portion of this material may be reproduced, in any form or by any means, without permission in writing from the publisher.

2–41.

Determine the magnitude of the resultant force and its direction, measured counterclockwise from the positive x axis.

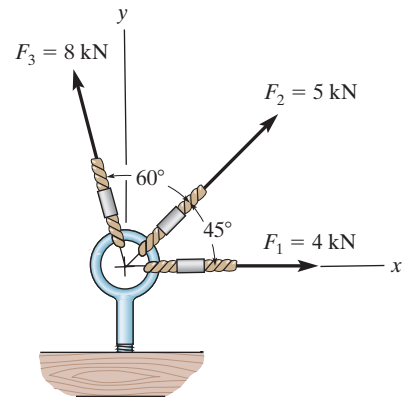

SOLUTION

Scalar Notation. Summing the force components along x and y axes algebraically by referring to Fig. a,

$$\overset{+}{\rightarrow} (F_R)_x = \Sigma F_x; \qquad (F_R)_x = 4 + 5\cos 45° - 8\sin 15° = 5.465 \text{ kN} \rightarrow$$

$$+\uparrow (F_R)_y = \Sigma F_y; \qquad (F_R)_y = 5\sin 45° + 8\cos 15° = 11.263 \text{ kN} \uparrow$$

By referring to Fig. b, the magnitude of the resultant force $\mathbf{F}_R$ is

$$F_R = \sqrt{(F_R)_x^2 + (F_R)_y^2} = \sqrt{5.465^2 + 11.263^2} = 12.52 \text{ kN} = 12.5 \text{ kN} \qquad \textbf{Ans.}$$

And the directional angle θ of $\mathbf{F}_R$ measured counterclockwise from the positive x axis is

$$\theta = \tan^{-1}\left[\frac{(F_R)_y}{(F_R)_x}\right] = \tan^{-1}\left(\frac{11.263}{5.465}\right) = 64.12° = 64.1° \qquad \textbf{Ans.}$$

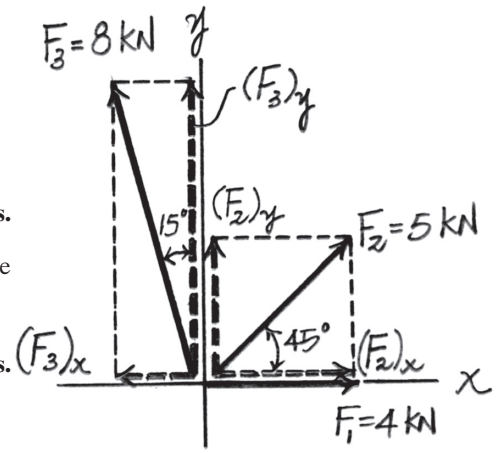

(a)

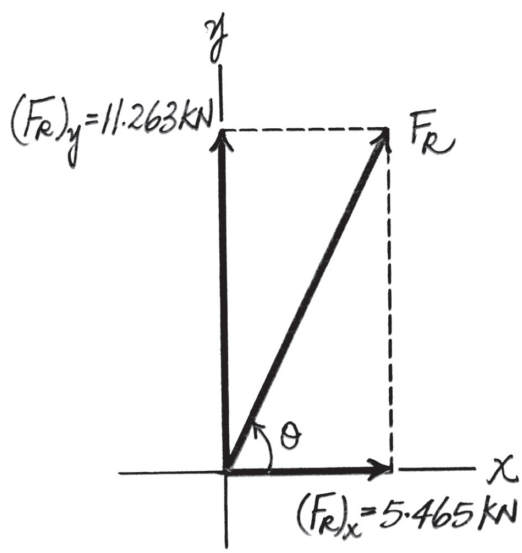

(b)

Ans:
$F_R = 12.5$ kN
$\theta = 64.1°$

Engineering Mechanics Statics 14th edition Hibbeler Solutions Manual

© 2016 Pearson Education, Inc., Upper Saddle River, NJ. All rights reserved. This material is protected under all copyright laws as they currently exist. No portion of this material may be reproduced, in any form or by any means, without permission in writing from the publisher.

2–42.

Express $\mathbf{F}_1$, $\mathbf{F}_2$, and $\mathbf{F}_3$ as Cartesian vectors.

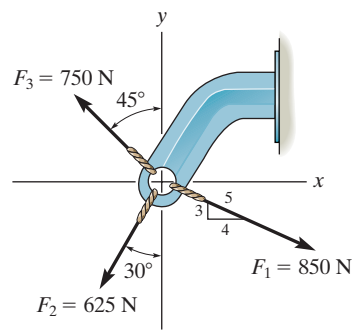

SOLUTION

$$\mathbf{F}_1 = \frac{4}{5}(850)\,\mathbf{i} - \frac{3}{5}(850)\,\mathbf{j}$$

$$= \{680\,\mathbf{i} - 510\,\mathbf{j}\}\text{ N} \qquad \textbf{Ans.}$$

$$\mathbf{F}_2 = -625\sin 30°\,\mathbf{i} - 625\cos 30°\,\mathbf{j}$$

$$= \{-312\,\mathbf{i} - 541\,\mathbf{j}\}\text{ N} \qquad \textbf{Ans.}$$

$$\mathbf{F}_3 = -750\sin 45°\,\mathbf{i} + 750\cos 45°\,\mathbf{j}$$

$$= \{-530\,\mathbf{i} + 530\,\mathbf{j}\}\text{ N} \qquad \textbf{Ans.}$$

Ans:
$\mathbf{F}_1 = \{680\mathbf{i} - 510\mathbf{j}\}$ N
$\mathbf{F}_2 = \{-312\mathbf{i} - 541\mathbf{j}\}$ N
$\mathbf{F}_3 = \{-530\mathbf{i} + 530\mathbf{j}\}$ N

Engineering Mechanics Statics 14th edition Hibbeler Solutions Manual

© 2016 Pearson Education, Inc., Upper Saddle River, NJ. All rights reserved. This material is protected under all copyright laws as they currently exist. No portion of this material may be reproduced, in any form or by any means, without permission in writing from the publisher.

2–43.

Determine the magnitude of the resultant force and its direction measured counterclockwise from the positive x axis.

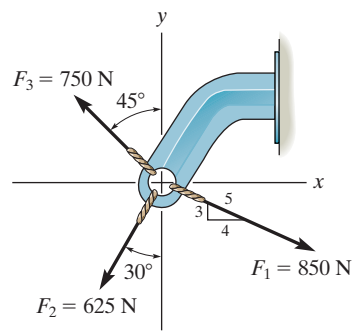

SOLUTION

$\overset{+}{\rightarrow} F_{Rx} = \Sigma F_x;\qquad F_{Rx} = \frac{4}{5}(850) - 625\sin 30° - 750\sin 45° = -162.83\text{ N}$

$+\uparrow F_{Ry} = \Sigma F_y;\qquad F_{Ry} = -\frac{3}{5}(850) - 625\cos 30° + 750\cos 45° = -520.94\text{ N}$

$F_R = \sqrt{(-162.83)^2 + (-520.94)^2} = 546\text{ N}$ **Ans.**

$\phi = \tan^{-1}\left(\frac{520.94}{162.83}\right) = 72.64°$

$\theta = 180° + 72.64° = 253°$ **Ans.**

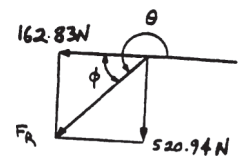

Ans:
$F_R = 546$ N
$\theta = 253°$

Engineering Mechanics Statics 14th edition Hibbeler Solutions Manual

© 2016 Pearson Education, Inc., Upper Saddle River, NJ. All rights reserved. This material is protected under all copyright laws as they currently exist. No portion of this material may be reproduced, in any form or by any means, without permission in writing from the publisher.

***2–44.**

Determine the magnitude of the resultant force and its direction, measured clockwise from the positive x axis.

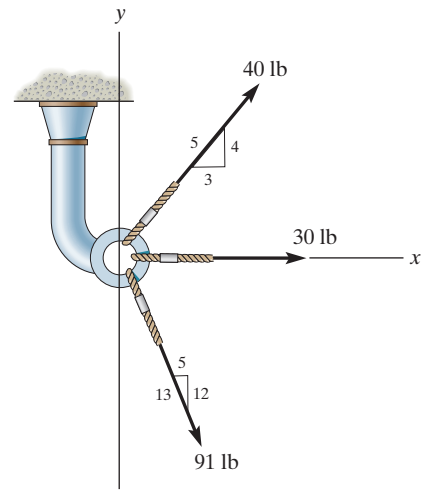

SOLUTION

Scalar Notation. Summing the force components along x and y axes algebraically by referring to Fig. a,

$$\overset{+}{\rightarrow}(F_R)_x = \Sigma F_x; \qquad (F_R)_x = 40\left(\frac{3}{5}\right) + 91\left(\frac{5}{13}\right) + 30 = 89 \text{ lb} \rightarrow$$

$$+\uparrow(F_R)_y = \Sigma F_y; \qquad (F_R)_y = 40\left(\frac{4}{5}\right) - 91\left(\frac{12}{13}\right) = -52 \text{ lb} = 52 \text{ lb}\downarrow$$

By referring to Fig. b, the magnitude of resultant force is

$$F_R = \sqrt{(F_R)_x^2 + (F_R)_y^2} = \sqrt{89^2 + 52^2} = 103.08 \text{ lb} = 103 \text{ lb} \qquad \textbf{Ans.}$$

And its directional angle θ measured clockwise from the positive x axis is

$$\theta = \tan^{-1}\left[\frac{(F_R)_y}{(F_R)_x}\right] = \tan^{-1}\left(\frac{52}{89}\right) = 30.30° = 30.3° \qquad \textbf{Ans.}$$

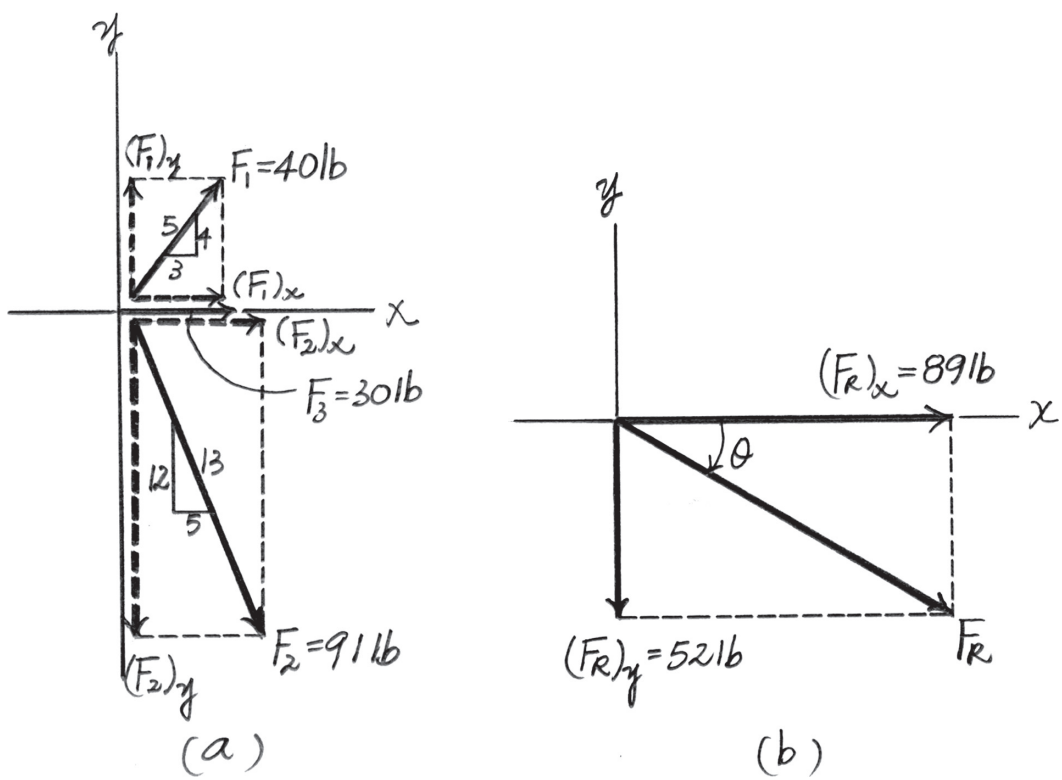

Ans:
$F_R = 103$ lb
$\theta = 30.3°$

Engineering Mechanics Statics 14th edition Hibbeler Solutions Manual

© 2016 Pearson Education, Inc., Upper Saddle River, NJ. All rights reserved. This material is protected under all copyright laws as they currently exist. No portion of this material may be reproduced, in any form or by any means, without permission in writing from the publisher.

2–45.

Determine the magnitude and direction θ of the resultant force $\mathbf{F}_R$. Express the result in terms of the magnitudes of the components $\mathbf{F}_1$ and $\mathbf{F}_2$ and the angle ϕ.

SOLUTION

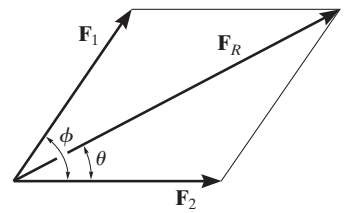

$$F_R^2 = F_1^2 + F_2^2 - 2F_1F_2\cos(180° - \phi)$$

Since $\cos(180° - \phi) = -\cos\phi$,

$$F_R = \sqrt{F_1^2 + F_2^2 + 2F_1F_2\cos\phi} \qquad \textbf{Ans.}$$

From the figure,

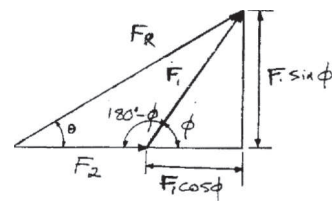

$$\tan\theta = \frac{F_1\sin\phi}{F_2 + F_1\cos\phi}$$

$$\theta = \tan^{-1}\left(\frac{F_1\sin\phi}{F_2 + F_1\cos\phi}\right) \qquad \textbf{Ans.}$$

Ans:
$F_R = \sqrt{F_1^2 + F_2^2 + 2F_1F_2\cos\phi}$
$\theta = \tan^{-1}\left(\dfrac{F_1\sin\phi}{F_2 + F_1\cos\phi}\right)$

Engineering Mechanics Statics 14th edition Hibbeler Solutions Manual

© 2016 Pearson Education, Inc., Upper Saddle River, NJ. All rights reserved. This material is protected under all copyright laws as they currently exist. No portion of this material may be reproduced, in any form or by any means, without permission in writing from the publisher.

2–46.

Determine the magnitude and orientation θ of $\mathbf{F}_B$ so that the resultant force is directed along the positive y axis and has a magnitude of 1500 N.

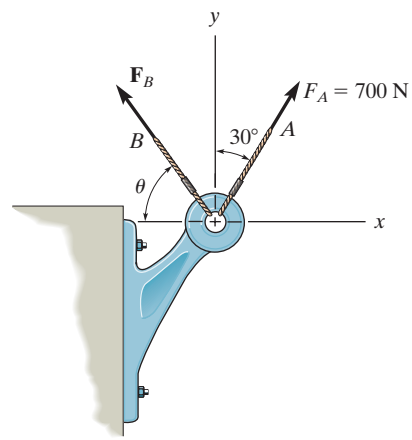

SOLUTION

Scalar Notation: Suming the force components algebraically, we have

$\xrightarrow{+} F_{R_z} = \Sigma F_x;$ $\quad 0 = 700 \sin 30° - F_B \cos\theta$

$$F_B \cos\theta = 350 \qquad \textbf{(1)}$$

$+\uparrow F_{R_y} = \Sigma F_y;$ $\quad 1500 = 700 \cos 30° + F_B \sin\theta$

$$F_B \sin\theta = 893.8 \qquad \textbf{(2)}$$

Solving Eq. (1) and (2) yields

$$\theta = 68.6° \qquad F_B = 960 \text{ N} \qquad \textbf{Ans.}$$

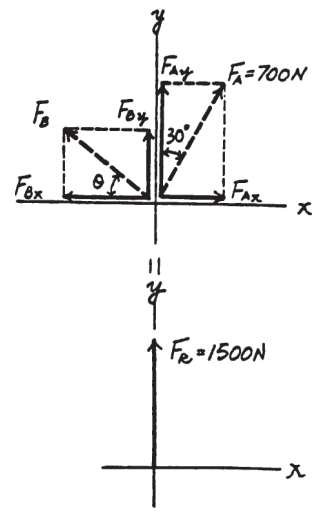

Ans:
$\theta = 68.6°$
$F_B = 960$ N

Engineering Mechanics Statics 14th edition Hibbeler Solutions Manual

© 2016 Pearson Education, Inc., Upper Saddle River, NJ. All rights reserved. This material is protected under all copyright laws as they currently exist. No portion of this material may be reproduced, in any form or by any means, without permission in writing from the publisher.

2–47.

Determine the magnitude and orientation, measured counterclockwise from the positive y axis, of the resultant force acting on the bracket, if $F_B = 600$ N and $\theta = 20°$.

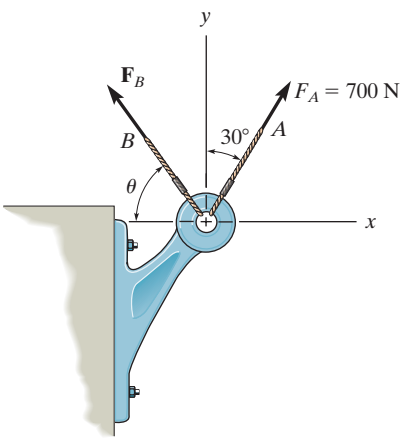

SOLUTION

Scalar Notation: Suming the force components algebraically, we have

$$\overset{+}{\rightarrow} F_{R_x} = \Sigma F_x; \quad F_{R_x} = 700 \sin 30° - 600 \cos 20°$$

$$= -213.8 \text{ N} = 213.8 \text{ N} \leftarrow$$

$$+\uparrow F_{R_y} = \Sigma F_y; \quad F_{R_y} = 700 \cos 30° + 600 \sin 20°$$

$$= 811.4 \text{ N} \uparrow$$

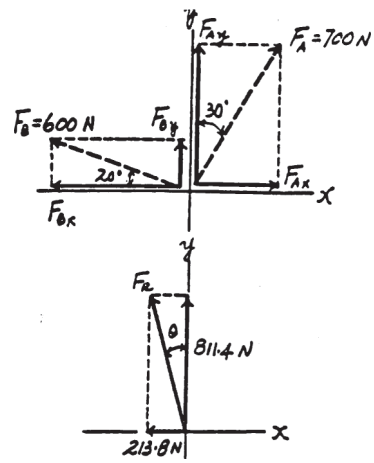

The magnitude of the resultant force $\mathbf{F}_R$ is

$$F_R = \sqrt{F_{R_x}^2 + F_{R_y}^2} = \sqrt{213.8^2 + 811.4^2} = 839 \text{ N} \qquad \textbf{Ans.}$$

The directional angle θ measured counterclockwise from positive y axis is

$$\theta = \tan^{-1} \frac{F_{R_x}}{F_{R_y}} = \tan^{-1}\left(\frac{213.8}{811.4}\right) = 14.8° \qquad \textbf{Ans.}$$

Ans:
$F_R = 839$ N
$\theta = 14.8°$

Engineering Mechanics Statics 14th edition Hibbeler Solutions Manual

© 2016 Pearson Education, Inc., Upper Saddle River, NJ. All rights reserved. This material is protected under all copyright laws as they currently exist. No portion of this material may be reproduced, in any form or by any means, without permission in writing from the publisher.

***2–48.**

Three forces act on the bracket. Determine the magnitude and direction θ of $\mathbf{F}_1$ so that the resultant force is directed along the positive x' axis and has a magnitude of 800 N.

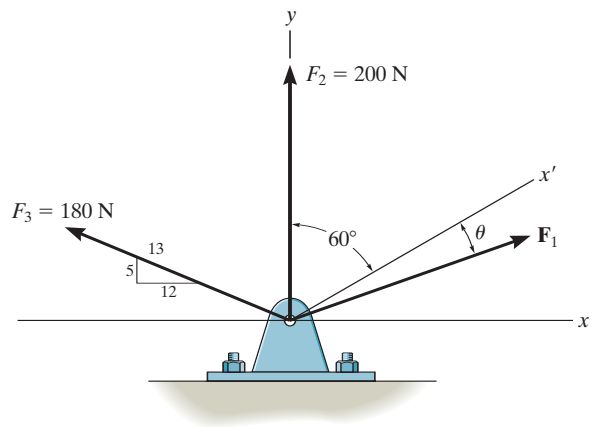

SOLUTION

$\xrightarrow{+} F_{Rx} = \Sigma F_x;$ $\quad 800 \sin 60° = F_1 \sin(60° + \theta) - \frac{12}{13}(180)$

$+\uparrow F_{Ry} = \Sigma F_y;$ $\quad 800 \cos 60° = F_1 \cos(60° + \theta) + 200 + \frac{5}{13}(180)$

$60° + \theta = 81.34°$

$\theta = 21.3°$ **Ans.**

$F_1 = 869$ N **Ans.**

Ans:
$\theta = 21.3°$
$F_1 = 869$ N

Engineering Mechanics Statics 14th edition Hibbeler Solutions Manual

© 2016 Pearson Education, Inc., Upper Saddle River, NJ. All rights reserved. This material is protected under all copyright laws as they currently exist. No portion of this material may be reproduced, in any form or by any means, without permission in writing from the publisher.

2–49.

If $F_1 = 300$ N and $\theta = 10°$, determine the magnitude and direction, measured counterclockwise from the positive x' axis, of the resultant force acting on the bracket.

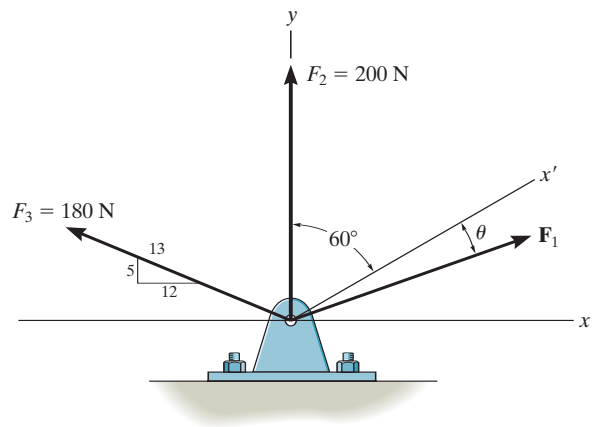

SOLUTION

$\overset{+}{\rightarrow} F_{Rx} = \Sigma F x;$ $\quad F_{Rx} = 300 \sin 70° - \frac{12}{13}(180) = 115.8$ N

$+\uparrow F_{Ry} = \Sigma F_y;$ $\quad F_{Ry} = 300 \cos 70° + 200 + \frac{5}{13}(180) = 371.8$ N

$F_R = \sqrt{(115.8)^2 + (371.8)^2} = 389$ N **Ans.**

$\phi = \tan^{-1}\left[\frac{371.8}{115.8}\right] = 72.71°$ $\quad \measuredangle\theta$

$\phi' = 72.71° - 30° = 42.7°$ **Ans.**

Ans:
$F_R = 389$ N
$\phi' = 42.7°$

Engineering Mechanics Statics 14th edition Hibbeler Solutions Manual

© 2016 Pearson Education, Inc., Upper Saddle River, NJ. All rights reserved. This material is protected under all copyright laws as they currently exist. No portion of this material may be reproduced, in any form or by any means, without permission in writing from the publisher.

2–50.

Express $\mathbf{F}_1$, $\mathbf{F}_2$, and $\mathbf{F}_3$ as Cartesian vectors.

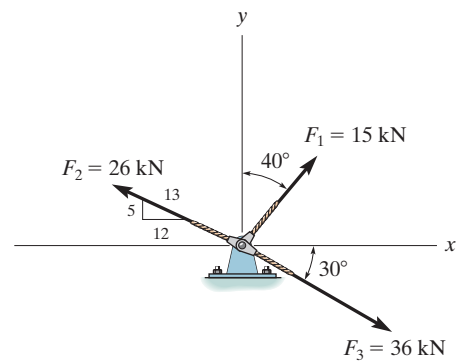

SOLUTION

$\mathbf{F}_1 = \{-200\,\mathbf{i}\}$ lb **Ans.**

$\mathbf{F}_2 = -250 \sin 30°\,\mathbf{i} + 250 \cos 30°\,\mathbf{j}$

$= \{-125\,\mathbf{i} + 217\,\mathbf{j}\}$ lb **Ans.**

$\mathbf{F}_3 = 225 \cos 30°\,\mathbf{i} + 225 \sin 30°\,\mathbf{j}$

$= \{195\,\mathbf{i} + 112\,\mathbf{j}\}$ lb **Ans.**

Ans:
$\mathbf{F}_1 = \{-200\mathbf{i}\}$ lb
$\mathbf{F}_2 = \{-125\mathbf{i} + 217\mathbf{j}\}$ lb
$\mathbf{F}_3 = \{195\mathbf{i} + 112\mathbf{j}\}$ lb

Engineering Mechanics Statics 14th edition Hibbeler Solutions Manual

© 2016 Pearson Education, Inc., Upper Saddle River, NJ. All rights reserved. This material is protected under all copyright laws as they currently exist. No portion of this material may be reproduced, in any form or by any means, without permission in writing from the publisher.

2–51.

Determine the magnitude of the resultant force and its orientation measured counterclockwise from the positive x axis.

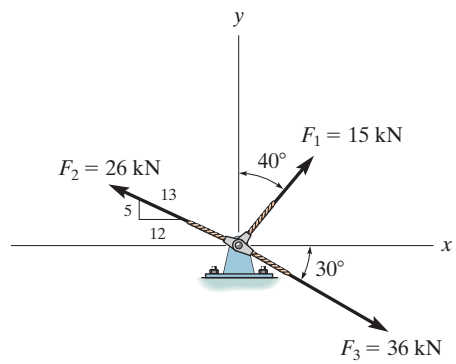

SOLUTION

$\xrightarrow{+} F_{Rx} = \Sigma F_x;\qquad F_{Rx} = 15\sin 40° - \frac{12}{13}(26) + 36\cos 30° = 16.82 \text{ kN}$

$+\uparrow F_{Ry} = \Sigma F_y;\qquad F_{Ry} = 15\cos 40° + \frac{5}{13}(26) - 36\sin 30° = 3.491 \text{ kN}$

$F_R = \sqrt{(16.82)^2 + (3.491)^2} = 17.2 \text{ kN}$ **Ans.**

$\theta = \tan^{-1}\left(\frac{3.491}{16.82}\right) = 11.7°$ **Ans.**

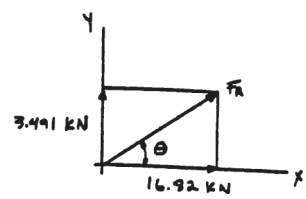

Also,

$\mathbf{F}_1 = \{15\sin 40°\,\mathbf{i} + 15\cos 40°\,\mathbf{j}\}\text{ kN} = \{9.64\mathbf{i} + 11.5\mathbf{j}\}\text{ kN}$

$\mathbf{F}_2 = \left\{-\frac{12}{13}(26)\mathbf{i} + \frac{5}{13}(26)\mathbf{j}\right\}\text{ kN} = \{-24\mathbf{i} + 10\mathbf{j}\}\text{ kN}$

$\mathbf{F}_3 = \{36\cos 30°\mathbf{i} - 36\sin 30°\mathbf{j}\}\text{ kN} = \{31.2\mathbf{i} - 18\mathbf{j}\}\text{ kN}$

$\mathbf{F}_R = \mathbf{F}_1 + \mathbf{F}_2 + \mathbf{F}_3$

$= \{9.64\mathbf{i} + 11.5\mathbf{j}\} + \{-24\mathbf{i} + 10\mathbf{j}\} + \{31.2\mathbf{i} - 18\mathbf{j}\}$

$= \{16.8\mathbf{i} + 3.49\mathbf{j}\}\text{ kN}$

Ans:
$F_R = 17.2$ kN, $\theta = 11.7°$

Engineering Mechanics Statics 14th edition Hibbeler Solutions Manual

© 2016 Pearson Education, Inc., Upper Saddle River, NJ. All rights reserved. This material is protected under all copyright laws as they currently exist. No portion of this material may be reproduced, in any form or by any means, without permission in writing from the publisher.

***2–52.**

Determine the x and y components of each force acting on the *gusset plate* of a bridge truss. Show that the resultant force is zero.

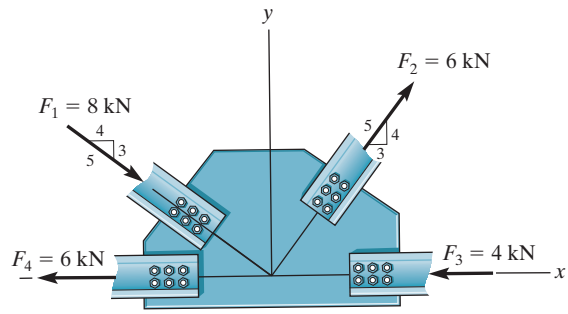

SOLUTION

Scalar Notation. Referring to Fig. *a*, the x and y components of each forces are

$$(F_1)_x = 8\left(\frac{4}{5}\right) = 6.40 \text{ kN} \rightarrow \qquad \textbf{Ans.}$$

$$(F_1)_y = 8\left(\frac{3}{5}\right) = 4.80 \text{ kN} \downarrow \qquad \textbf{Ans.}$$

$$(F_2)_x = 6\left(\frac{3}{5}\right) = 3.60 \text{ kN} \rightarrow \qquad \textbf{Ans.}$$

$$(F_2)_y = 6\left(\frac{4}{5}\right) = 4.80 \text{ kN} \uparrow \qquad \textbf{Ans.}$$

$$(F_3)_x = 4 \text{ kN} \leftarrow \qquad \textbf{Ans.}$$

$$(F_3)_y = 0 \qquad \textbf{Ans.}$$

$$(F_4)_x = 6 \text{ kN} \leftarrow \qquad \textbf{Ans.}$$

$$(F_4)_y = 0 \qquad \textbf{Ans.}$$

Summing these force components along x and y axes algebraically,

$$\overset{+}{\rightarrow} (F_R)_x = \Sigma F_x; \qquad (F_R)_x = 6.40 + 3.60 - 4 - 6 = 0$$

$$+\uparrow (F_R)_y = \Sigma F_y; \qquad (F_R)_y = 4.80 - 4.80 = 0$$

Thus,

$$F_R = \sqrt{(F_R)_x^2 + (F_R)_y^2} = \sqrt{O^2 + O^2} = O \qquad \textbf{(Q.E.D)}$$

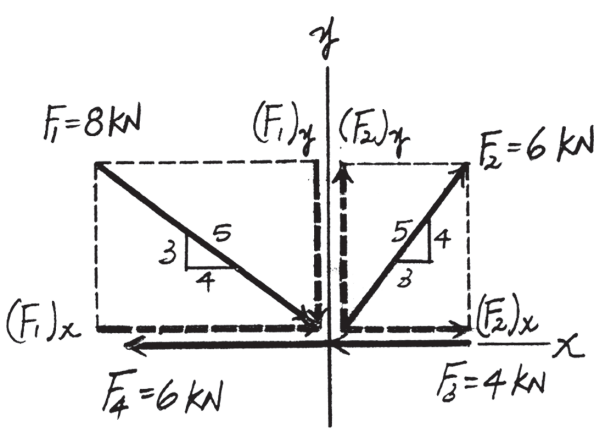

(a)

Ans:
$(F_1)_x = 6.40$ kN $\rightarrow$
$(F_1)_y = 4.80$ kN $\downarrow$
$(F_2)_x = 3.60$ kN $\rightarrow$
$(F_2)_y = 4.80$ kN $\uparrow$
$(F_3)_x = 4$ kN $\leftarrow$
$(F_3)_y = 0$
$(F_4)_x = 6$ kN $\leftarrow$
$(F_4)_y = 0$

Engineering Mechanics Statics 14th edition Hibbeler Solutions Manual

© 2016 Pearson Education, Inc., Upper Saddle River, NJ. All rights reserved. This material is protected under all copyright laws as they currently exist. No portion of this material may be reproduced, in any form or by any means, without permission in writing from the publisher.

2–53.

Express $\mathbf{F}_1$ and $\mathbf{F}_2$ as Cartesian vectors.

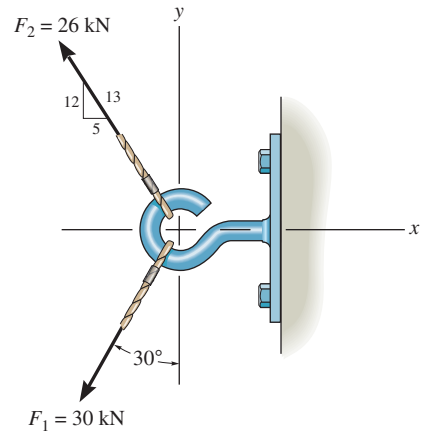

SOLUTION

$$\mathbf{F}_1 = -30 \sin 30° \, \mathbf{i} - 30 \cos 30° \, \mathbf{j}$$

$$= \{-15.0 \, \mathbf{i} - 26.0 \, \mathbf{j}\} \text{ kN}$$ **Ans.**

$$\mathbf{F}_2 = -\frac{5}{13}(26) \, \mathbf{i} + \frac{12}{13}(26) \, \mathbf{j}$$

$$= \{-10.0 \, \mathbf{i} + 24.0 \, \mathbf{j}\} \text{ kN}$$ **Ans.**

Ans:
$\mathbf{F}_1 = \{-15.0\mathbf{i} - 26.0\mathbf{j}\}$ kN
$\mathbf{F}_2 = \{-10.0\mathbf{i} + 24.0\mathbf{j}\}$ kN

Engineering Mechanics Statics 14th edition Hibbeler Solutions Manual

© 2016 Pearson Education, Inc., Upper Saddle River, NJ. All rights reserved. This material is protected under all copyright laws as they currently exist. No portion of this material may be reproduced, in any form or by any means, without permission in writing from the publisher.

2–54.

Determine the magnitude of the resultant force and its direction measured counterclockwise from the positive x axis.

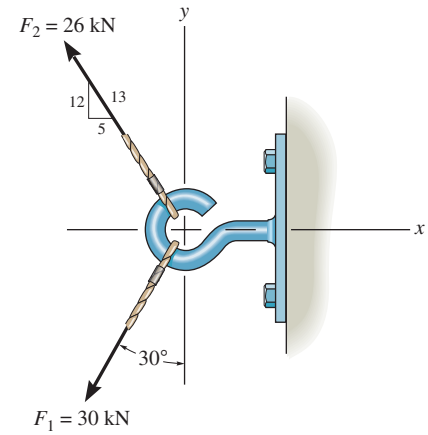

SOLUTION

$\overset{+}{\rightarrow} F_{Rx} = \Sigma F_x; \quad F_{Rx} = -30 \sin 30° - \frac{5}{13}(26) = -25 \text{ kN}$

$+\uparrow F_{Ry} = \Sigma F_y; \quad F_{Ry} = -30 \cos 30° + \frac{12}{13}(26) = -1.981 \text{ kN}$

$$F_R = \sqrt{(-25)^2 + (-1.981)^2} = 25.1 \text{ kN}$$ **Ans.**

$$\phi = \tan^{-1}\left(\frac{1.981}{25}\right) = 4.53°$$

$$\theta = 180° + 4.53° = 185°$$ **Ans.**

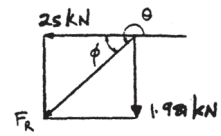

Ans:
$F_R = 25.1$ kN
$\theta = 185°$

Engineering Mechanics Statics 14th edition Hibbeler Solutions Manual

© 2016 Pearson Education, Inc., Upper Saddle River, NJ. All rights reserved. This material is protected under all copyright laws as they currently exist. No portion of this material may be reproduced, in any form or by any means, without permission in writing from the publisher.

2–55.

Determine the magnitude of force **F** so that the resultant force of the three forces is as small as possible. What is the magnitude of the resultant force?

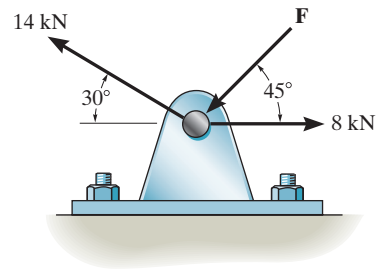

SOLUTION

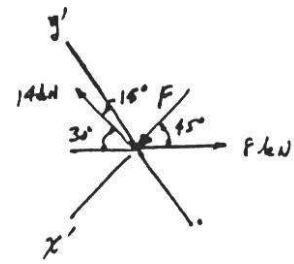

$\xrightarrow{+} F_{Rx} = \Sigma F_x;$ $\quad F_{Rz} = 8 - F\cos 45° - 14\cos 30°$

$= -4.1244 - F\cos 45°$

$+\uparrow F_{Ry} = \Sigma F_y;$ $\quad F_{Ry} = -F\sin 45° + 14\sin 30°$

$= 7 - F\sin 45°$

$$F_R^2 = (-4.1244 - F\cos 45°)^2 + (7 - F\sin 45°)^2 \qquad \textbf{(1)}$$

$$2F_R\frac{dF_R}{dF} = 2(-4.1244 - F\cos 45°)(-\cos 45°) + 2(7 - F\sin 45°)(-\sin 45°) = 0$$

$F = 2.03$ kN **Ans.**

From Eq. (1); $\quad F_R = 7.87$ kN **Ans.**

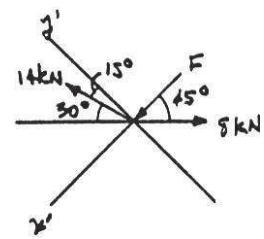

Also, from the figure require

$(F_R)_{x'} = 0 = \Sigma F_{x'};$ $\quad F + 14\sin 15° - 8\cos 45° = 0$

$F = 2.03$ kN **Ans.**

$(F_R)_{y'} = \Sigma F_{y'};$ $\quad F_R = 14\cos 15° - 8\sin 45°$

$F_R = 7.87$ kN **Ans.**

Ans:
$F = 2.03$ kN
$F_R = 7.87$ kN

Engineering Mechanics Statics 14th edition Hibbeler Solutions Manual

© 2016 Pearson Education, Inc., Upper Saddle River, NJ. All rights reserved. This material is protected under all copyright laws as they currently exist. No portion of this material may be reproduced, in any form or by any means, without permission in writing from the publisher.

***2–56.**

If the magnitude of the resultant force acting on the bracket is to be 450 N directed along the positive u axis, determine the magnitude of $\mathbf{F}_1$ and its direction ϕ.

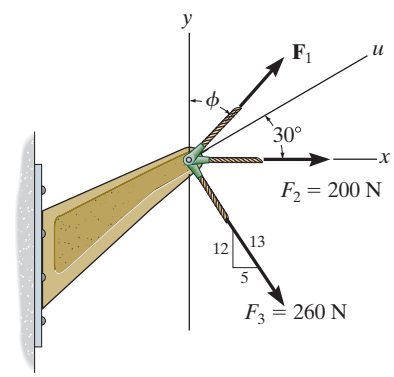

SOLUTION

Rectangular Components: By referring to Fig. a, the x and y components of $\mathbf{F}_1$, $\mathbf{F}_2$, $\mathbf{F}_3$, and $\mathbf{F}_R$ can be written as

$$(F_1)_x = F_1 \sin\phi \qquad (F_1)_y = F_1 \cos\phi$$

$$(F_2)_x = 200 \text{ N} \qquad (F_2)_y = 0$$

$$(F_3)_x = 260\left(\frac{5}{13}\right) = 100 \text{ N} \qquad (F_3)_y = 260\left(\frac{12}{13}\right) = 240 \text{ N}$$

$$(F_R)_x = 450\cos 30° = 389.71 \text{ N} \qquad (F_R)_y = 450 \sin 30° = 225 \text{ N}$$

Resultant Force: Summing the force components algebraically along the x and y axes,

$$\overset{+}{\rightarrow} \Sigma(F_R)_x = \Sigma F_x; \quad 389.71 = F_1 \sin\phi + 200 + 100$$

$$F_1 \sin\phi = 89.71 \qquad \textbf{(1)}$$

$$+\uparrow \Sigma(F_R)_y = \Sigma F_y; \quad 225 = F_1 \cos\phi - 240$$

$$F_1 \cos\phi = 465 \qquad \textbf{(2)}$$

Solving Eqs. (1) and (2), yields

$$\phi = 10.9° \qquad F_1 = 474 \text{ N} \qquad \textbf{Ans.}$$

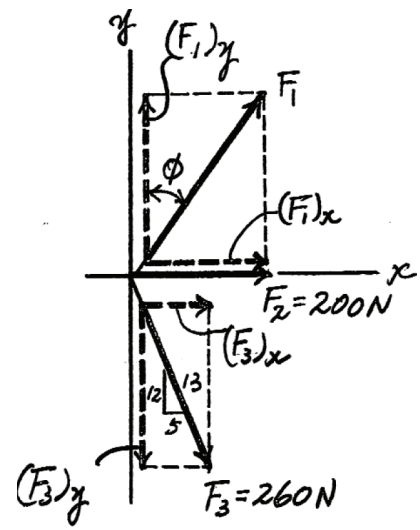

(a)

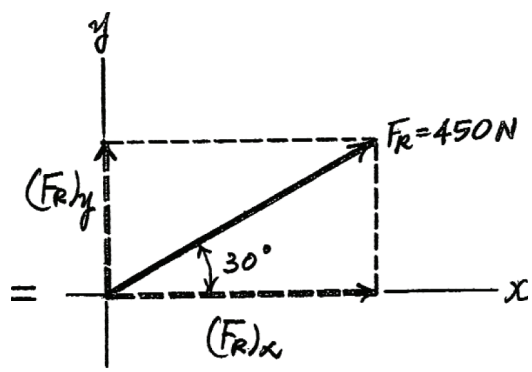

(b)

Ans:
$\phi = 10.9°$
$F_1 = 474$ N

Engineering Mechanics Statics 14th edition Hibbeler Solutions Manual

© 2016 Pearson Education, Inc., Upper Saddle River, NJ. All rights reserved. This material is protected under all copyright laws as they currently exist. No portion of this material may be reproduced, in any form or by any means, without permission in writing from the publisher.

2–57.

If the resultant force acting on the bracket is required to be a minimum, determine the magnitudes of $\mathbf{F}_1$ and the resultant force. Set $\phi = 30°$.

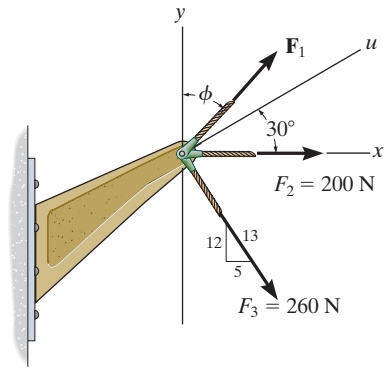

SOLUTION

Rectangular Components: By referring to Fig. *a*, the *x* and *y* components of $\mathbf{F}_1$, $\mathbf{F}_2$, and $\mathbf{F}_3$ can be written as

$$(F_1)_x = F_1 \sin 30° = 0.5F_1 \qquad (F_1)_y = F_1 \cos 30° = 0.8660F_1$$

$$(F_2)_x = 200 \text{ N} \qquad (F_2)_y = 0$$

$$(F_3)_x = 260\left(\frac{5}{13}\right) = 100 \text{ N} \qquad (F_3)_y = 260\left(\frac{12}{13}\right) = 240 \text{ N}$$

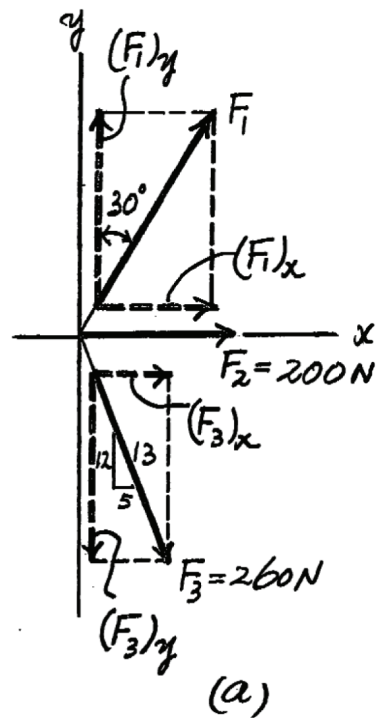

Resultant Force: Summing the force components algebraically along the *x* and *y* axes,

$$\xrightarrow{+} \Sigma(F_R)_x = \Sigma F_x; \quad (F_R)_x = 0.5F_1 + 200 + 100 = 0.5F_1 + 300$$

$$+\uparrow \Sigma(F_R)_y = \Sigma F_y; \quad (F_R)_y = 0.8660F_1 - 240$$

The magnitude of the resultant force $\mathbf{F}_R$ is

$$F_R = \sqrt{(F_R)_x^2 + (F_R)_y^2}$$

$$= \sqrt{(0.5F_1 + 300)^2 + (0.8660F_1 - 240)^2}$$

$$= \sqrt{F_1^2 - 115.69F_1 + 147\,600} \qquad \textbf{(1)}$$

Thus,

$$F_R^2 = F_1^2 - 115.69F_1 + 147\,600 \qquad \textbf{(2)}$$

The first derivative of Eq. (2) is

$$2F_R \frac{dF_R}{dF_1} = 2F_1 - 115.69 \qquad \textbf{(3)}$$

For $\mathbf{F}_R$ to be minimum, $\dfrac{dF_R}{dF_1} = 0$. Thus, from Eq. (3)

$$2F_R \frac{dF_R}{dF_1} = 2F_1 - 115.69 = 0$$

$$F_1 = 57.846 \text{ N} = 57.8 \text{ N} \qquad \textbf{Ans.}$$

from Eq. (1),

$$F_R = \sqrt{(57.846)^2 - 115.69(57.846) + 147\,600} = 380 \text{ N} \qquad \textbf{Ans.}$$

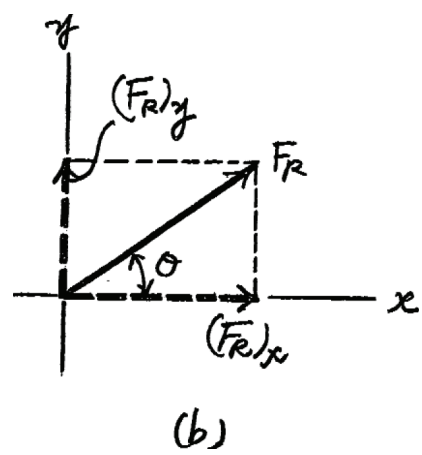

Ans:
$F_R = 380$ N
$F_1 = 57.8$ N

Engineering Mechanics Statics 14th edition Hibbeler Solutions Manual

© 2016 Pearson Education, Inc., Upper Saddle River, NJ. All rights reserved. This material is protected under all copyright laws as they currently exist. No portion of this material may be reproduced, in any form or by any means, without permission in writing from the publisher.

2–58.

Three forces act on the bracket. Determine the magnitude and direction θ of **F** so that the resultant force is directed along the positive x' axis and has a magnitude of 8 kN.

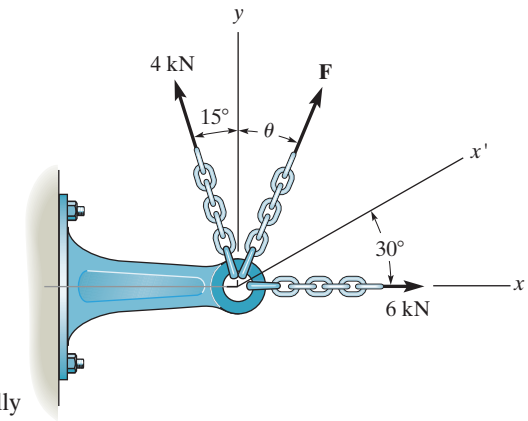

SOLUTION

Scalar Notation. Equating the force components along the x and y axes algebraically by referring to Fig. a,

$$\xrightarrow{+} (F_R)_x = \Sigma F_x; \qquad 8\cos 30° = F\sin\theta + 6 - 4\sin 15°$$

$$F\sin\theta = 1.9635 \qquad (1)$$

$$+\uparrow (F_R)_y = \Sigma F_y; \qquad 8\sin 30° = F\cos\theta + 4\cos 15°$$

$$F\cos\theta = 0.1363 \qquad (2)$$

Divide Eq (1) by (2)

$$\tan\theta = 14.406 \qquad \theta = 86.03° = 86.0° \qquad \textbf{Ans.}$$

Substitute this result into Eq (1)

$$F\sin 86.03° = 1.9635$$

$$F = 1.968\text{ kN} = 1.97\text{ kN} \qquad \textbf{Ans.}$$

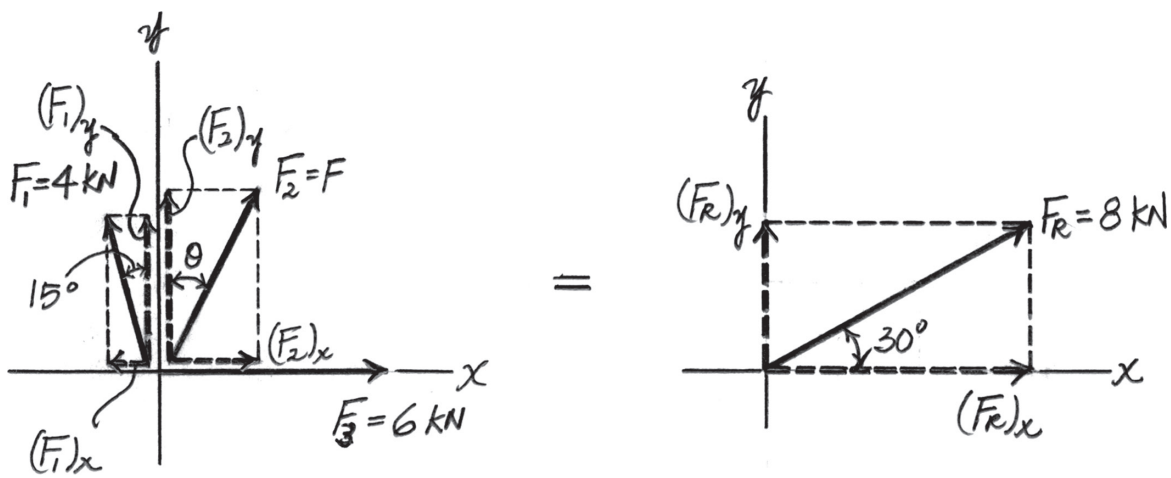

Ans:
$\theta = 86.0°$
$F = 1.97$ kN

Engineering Mechanics Statics 14th edition Hibbeler Solutions Manual

© 2016 Pearson Education, Inc., Upper Saddle River, NJ. All rights reserved. This material is protected under all copyright laws as they currently exist. No portion of this material may be reproduced, in any form or by any means, without permission in writing from the publisher.

2–59.

If $F = 5$ kN and $\theta = 30°$, determine the magnitude of the resultant force and its direction, measured counterclockwise from the positive x axis.

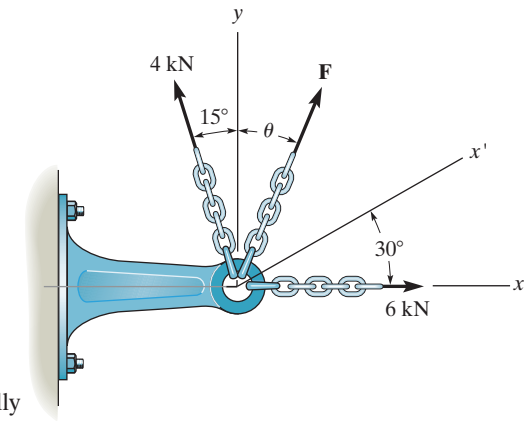

SOLUTION

Scalar Notation. Summing the force components along x and y axes algebraically by referring to Fig. a,

$$\overset{+}{\rightarrow} (F_R)_x = \Sigma F_x; \quad (F_R)_x = 5 \sin 30° + 6 - 4 \sin 15° = 7.465 \text{ kN} \rightarrow$$

$$+\uparrow (F_R)_y = \Sigma F_y; \quad (F_R)_y = 4 \cos 15° + 5 \cos 30° = 8.194 \text{ kN} \uparrow$$

By referring to Fig. b, the magnitude of the resultant force is

$$F_R = \sqrt{(F_R)_x^2 + (F_R)_y^2} = \sqrt{7.465^2 + 8.194^2} = 11.08 \text{ kN} = 11.1 \text{ kN} \quad \textbf{Ans.}$$

And its directional angle θ measured counterclockwise from the positive x axis is

$$\theta = \tan^{-1}\left[\frac{(F_R)_y}{(F_R)_x}\right] = \tan^{-1}\left(\frac{8.194}{7.465}\right) = 47.67° = 47.7° \quad \textbf{Ans.}$$

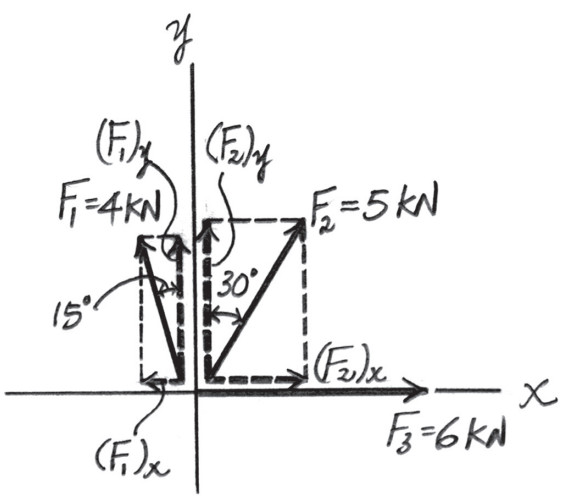

(a)

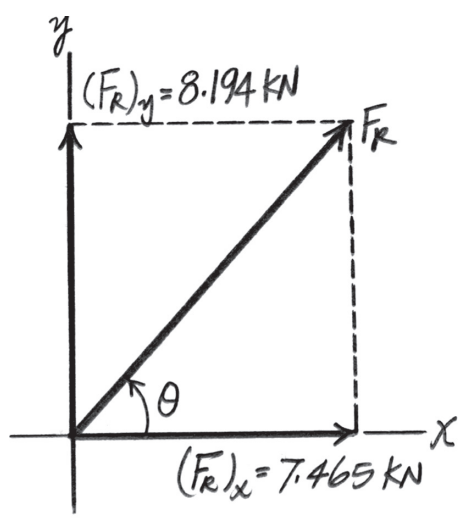

(b)

Ans:
$F_R = 11.1$ kN
$\theta = 47.7°$

Engineering Mechanics Statics 14th edition Hibbeler Solutions Manual

© 2016 Pearson Education, Inc., Upper Saddle River, NJ. All rights reserved. This material is protected under all copyright laws as they currently exist. No portion of this material may be reproduced, in any form or by any means, without permission in writing from the publisher.

***2–60.**

The force **F** has a magnitude of 80 lb and acts within the octant shown. Determine the magnitudes of the x, y, z components of **F**.

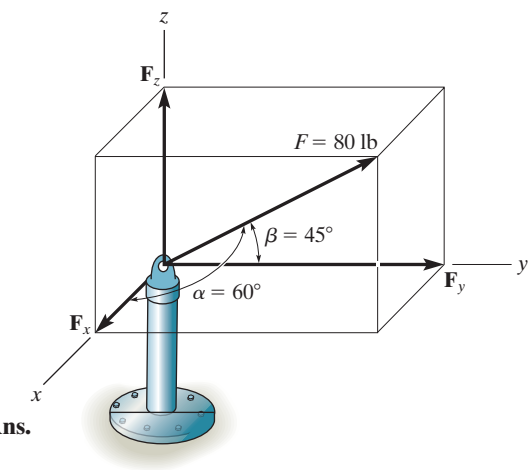

SOLUTION

$1 = \cos^2 60° + \cos^2 45° + \cos^2 \gamma$

Solving for the positive root, $\gamma = 60°$

$F_x = 80 \cos 60° = 40.0$ lb **Ans.**

$F_y = 80 \cos 45° = 56.6$ lb **Ans.**

$F_z = 80 \cos 60° = 40.0$ lb **Ans.**

Ans:
$F_x = 40.0$ lb
$F_y = 56.6$ lb
$F_z = 40.0$ lb

Engineering Mechanics Statics 14th edition Hibbeler Solutions Manual

© 2016 Pearson Education, Inc., Upper Saddle River, NJ. All rights reserved. This material is protected under all copyright laws as they currently exist. No portion of this material may be reproduced, in any form or by any means, without permission in writing from the publisher.

2–61.

The bolt is subjected to the force **F**, which has components acting along the *x, y, z* axes as shown. If the magnitude of **F** is 80 N, and $\alpha = 60°$ and $\gamma = 45°$, determine the magnitudes of its components.

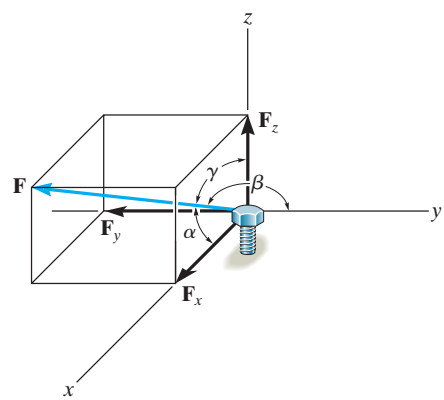

SOLUTION

$$\cos\beta = \sqrt{1 - \cos^2\alpha - \cos^2\gamma}$$

$$= \sqrt{1 - \cos^2 60° - \cos^2 45°}$$

$$\beta = 120°$$

$$F_x = |80 \cos 60°| = 40 \text{ N} \qquad \textbf{Ans.}$$

$$F_y = |80 \cos 120°| = 40 \text{ N} \qquad \textbf{Ans.}$$

$$F_z = |80 \cos 45°| = 56.6 \text{ N} \qquad \textbf{Ans.}$$

Ans:
$F_x = 40$ N
$F_y = 40$ N
$F_z = 56.6$ N

Engineering Mechanics Statics 14th edition Hibbeler Solutions Manual

© 2016 Pearson Education, Inc., Upper Saddle River, NJ. All rights reserved. This material is protected under all copyright laws as they currently exist. No portion of this material may be reproduced, in any form or by any means, without permission in writing from the publisher.

2–62.

Determine the magnitude and coordinate direction angles of the force **F** acting on the support. The component of **F** in the x–y plane is 7 kN.

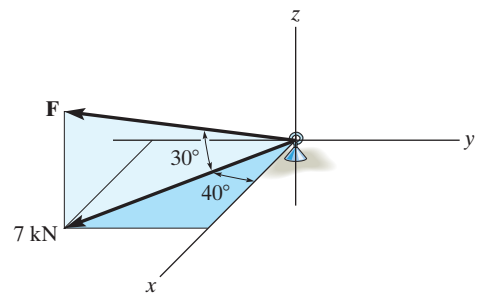

SOLUTION

Coordinate Direction Angles. The unit vector of **F** is

$$\mathbf{u}_F = \cos 30° \cos 40° \mathbf{i} - \cos 30° \sin 40° \mathbf{j} + \sin 30° \mathbf{k}$$
$$= \{0.6634\mathbf{i} - 0.5567\mathbf{j} + 0.5\,\mathbf{k}\}$$

Thus,

$\cos\alpha = 0.6634; \quad \alpha = 48.44° = 48.4°$ **Ans.**

$\cos\beta = -0.5567; \quad \beta = 123.83° = 124°$ **Ans.**

$\cos\gamma = 0.5; \quad \gamma = 60°$ **Ans.**

The magnitude of **F** can be determined from

$F\cos 30° = 7; \quad F = 8.083 \text{ kN} = 8.08 \text{ kN}$ **Ans.**

Ans:
$\alpha = 48.4°$
$\beta = 124°$
$\gamma = 60°$
$F = 8.08$ kN

Engineering Mechanics Statics 14th edition Hibbeler Solutions Manual

© 2016 Pearson Education, Inc., Upper Saddle River, NJ. All rights reserved. This material is protected under all copyright laws as they currently exist. No portion of this material may be reproduced, in any form or by any means, without permission in writing from the publisher.

2–63.

Determine the magnitude and coordinate direction angles of the resultant force and sketch this vector on the coordinate system.

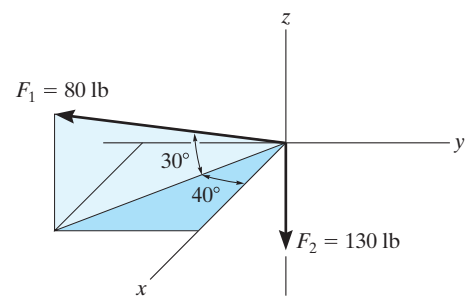

SOLUTION

$\mathbf{F}_1 = \{80 \cos 30° \cos 40° \mathbf{i} - 80 \cos 30° \sin 40° \mathbf{j} + 80 \sin 30° \mathbf{k}\}$ lb

$\mathbf{F}_1 = \{53.1\mathbf{i} - 44.5\mathbf{j} + 40\mathbf{k}\}$ lb

$\mathbf{F}_2 = \{-130\mathbf{k}\}$ lb

$\mathbf{F}_R = \mathbf{F}_1 + \mathbf{F}_2$

$\mathbf{F}_R = \{53.1\mathbf{i} - 44.5\mathbf{j} - 90.0\mathbf{k}\}$ lb

$F_R = \sqrt{(53.1)^2 + (-44.5)^2 + (-90.0)^2} = 114$ lb **Ans.**

$\alpha = \cos^{-1}\left(\dfrac{53.1}{113.6}\right) = 62.1°$ **Ans.**

$\beta = \cos^{-1}\left(\dfrac{-44.5}{113.6}\right) = 113°$ **Ans.**

$\gamma = \cos^{-1}\left(\dfrac{-90.0}{113.6}\right) = 142°$ **Ans.**

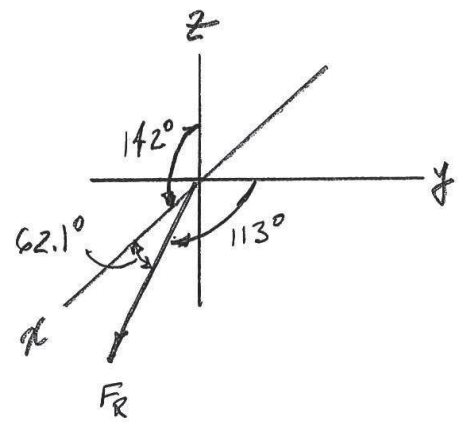

Ans:
$F_R = 114$ lb
$\alpha = 62.1°$
$\beta = 113°$
$\gamma = 142°$

Engineering Mechanics Statics 14th edition Hibbeler Solutions Manual

© 2016 Pearson Education, Inc., Upper Saddle River, NJ. All rights reserved. This material is protected under all copyright laws as they currently exist. No portion of this material may be reproduced, in any form or by any means, without permission in writing from the publisher.

***2–64.**

Specify the coordinate direction angles of $\mathbf{F}_1$ and $\mathbf{F}_2$ and express each force as a Cartesian vector.

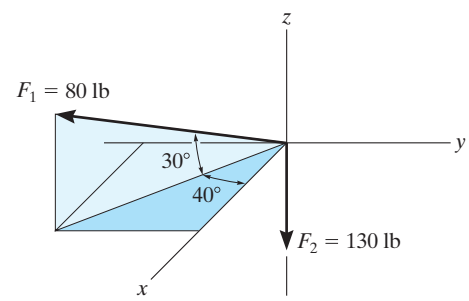

SOLUTION

$\mathbf{F}_1 = \{80 \cos 30° \cos 40° \mathbf{i} - 80 \cos 30° \sin 40° \mathbf{j} + 80 \sin 30° \mathbf{k}\}$ lb

$\mathbf{F}_1 = \{53.1\mathbf{i} - 44.5\mathbf{j} + 40\mathbf{k}\}$ lb **Ans.**

$\alpha_1 = \cos^{-1}\left(\frac{53.1}{80}\right) = 48.4°$ **Ans.**

$\beta_1 = \cos^{-1}\left(\frac{-44.5}{80}\right) = 124°$ **Ans.**

$\gamma_1 = \cos^{-1}\left(\frac{40}{80}\right) = 60°$ **Ans.**

$\mathbf{F}_2 = \{-130\mathbf{k}\}$ lb **Ans.**

$\alpha_2 = \cos^{-1}\left(\frac{0}{130}\right) = 90°$ **Ans.**

$\beta_2 = \cos^{-1}\left(\frac{0}{130}\right) = 90°$ **Ans.**

$\gamma_2 = \cos^{-1}\left(\frac{-130}{130}\right) = 180°$ **Ans.**

Ans:
$\mathbf{F}_1 = \{53.1\mathbf{i} - 44.5\mathbf{j} + 40\mathbf{k}\}$ lb
$\alpha_1 = 48.4°$
$\beta_1 = 124°$
$\gamma_1 = 60°$
$\mathbf{F}_2 = \{-130\text{k}\}$ lb
$\alpha_2 = 90°$
$\beta_2 = 90°$
$\gamma_2 = 180°$

Engineering Mechanics Statics 14th edition Hibbeler Solutions Manual

© 2016 Pearson Education, Inc., Upper Saddle River, NJ. All rights reserved. This material is protected under all copyright laws as they currently exist. No portion of this material may be reproduced, in any form or by any means, without permission in writing from the publisher.

2–65.

The screw eye is subjected to the two forces shown. Express each force in Cartesian vector form and then determine the resultant force. Find the magnitude and coordinate direction angles of the resultant force.

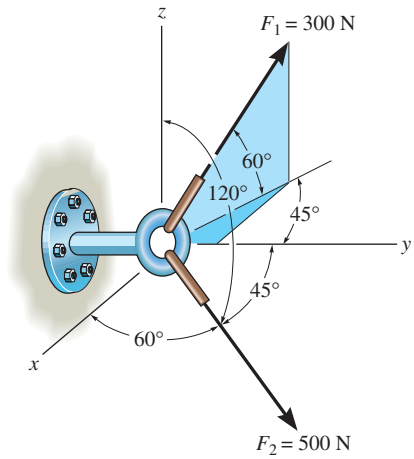

SOLUTION

$$\mathbf{F}_1 = 300(-\cos 60^\circ \sin 45^\circ \mathbf{i} + \cos 60^\circ \cos 45^\circ \mathbf{j} + \sin 60^\circ \mathbf{k})$$

$$= \{-106.07\mathbf{i} + 106.07\mathbf{j} + 259.81\mathbf{k}\}\text{ N}$$

$$= \{-106\mathbf{i} + 106\mathbf{j} + 260\mathbf{k}\}\text{ N} \qquad \textbf{Ans.}$$

$$\mathbf{F}_2 = 500(\cos 60^\circ \mathbf{i} + \cos 45^\circ \mathbf{j} + \cos 120^\circ \mathbf{k})$$

$$= \{250.0\mathbf{i} + 353.55\mathbf{j} - 250.0\mathbf{k}\}\text{ N}$$

$$= \{250\mathbf{i} + 354\mathbf{j} - 250\mathbf{k}\}\text{ N} \qquad \textbf{Ans.}$$

$$\mathbf{F}_R = \mathbf{F}_1 + \mathbf{F}_2$$

$$= -106.07\mathbf{i} + 106.07\mathbf{j} + 259.81\mathbf{k} + 250.0\mathbf{i} + 353.55\mathbf{j} - 250.0\mathbf{k}$$

$$= 143.93\mathbf{i} + 459.62\mathbf{j} + 9.81\mathbf{k}$$

$$= \{144\mathbf{i} + 460\mathbf{j} + 9.81\mathbf{k}\}\text{ N} \qquad \textbf{Ans.}$$

$$F_R = \sqrt{143.93^2 + 459.62^2 + 9.81^2} = 481.73\text{ N} = 482\text{ N} \qquad \textbf{Ans.}$$

$$\mathbf{u}_{F_R} = \frac{\mathbf{F}_R}{F_R} = \frac{143.93\mathbf{i} + 459.62\mathbf{j} + 9.81\mathbf{k}}{481.73} = 0.2988\mathbf{i} + 0.9541\mathbf{j} + 0.02036\mathbf{k}$$

$$\cos\alpha = 0.2988 \qquad \alpha = 72.6^\circ \qquad \textbf{Ans.}$$

$$\cos\beta = 0.9541 \qquad \beta = 17.4^\circ \qquad \textbf{Ans.}$$

$$\cos\gamma = 0.02036 \qquad \gamma = 88.8^\circ \qquad \textbf{Ans.}$$

Ans:
$\mathbf{F}_1 = \{-106\mathbf{i} + 106\mathbf{j} + 260\mathbf{k}\}$ N
$\mathbf{F}_2 = \{250\mathbf{i} + 354\mathbf{j} - 250\mathbf{k}\}$ N
$\mathbf{F}_R = \{144\mathbf{i} + 460\mathbf{j} + 9.81\mathbf{k}\}$ N
$F_R = 482$ N
$\alpha = 72.6^\circ$
$\beta = 17.4^\circ$
$\gamma = 88.8^\circ$

Engineering Mechanics Statics 14th edition Hibbeler Solutions Manual

© 2016 Pearson Education, Inc., Upper Saddle River, NJ. All rights reserved. This material is protected under all copyright laws as they currently exist. No portion of this material may be reproduced, in any form or by any means, without permission in writing from the publisher.

2–66.

Determine the coordinate direction angles of $\mathbf{F}_1$.

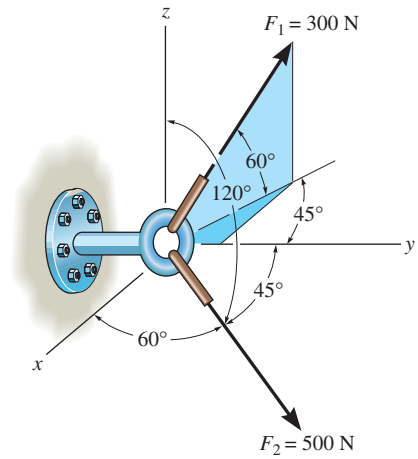

SOLUTION

$$\mathbf{F}_1 = 300(-\cos 60^\circ \sin 45^\circ \mathbf{i} + \cos 60^\circ \cos 45^\circ \mathbf{j} + \sin 60^\circ \mathbf{k})$$

$$= \{-106.07\mathbf{i} + 106.07\mathbf{j} + 259.81\mathbf{k}\}\ \text{N}$$

$$= \{-106\mathbf{i} + 106\mathbf{j} + 260\mathbf{k}\}\ \text{N}$$

$$\mathbf{u}_1 = \frac{\mathbf{F}_1}{300} = -0.3536\mathbf{i} + 0.3536\mathbf{j} + 0.8660\mathbf{k}$$

$\alpha_1 = \cos^{-1}(-0.3536) = 111^\circ$ **Ans.**

$\beta_1 = \cos^{-1}(0.3536) = 69.3^\circ$ **Ans.**

$\gamma_1 = \cos^{-1}(0.8660) = 30.0^\circ$ **Ans.**

Ans:
$\alpha_1 = 111^\circ$
$\beta_1 = 69.3^\circ$
$\gamma_1 = 30.0^\circ$

Engineering Mechanics Statics 14th edition Hibbeler Solutions Manual

© 2016 Pearson Education, Inc., Upper Saddle River, NJ. All rights reserved. This material is protected under all copyright laws as they currently exist. No portion of this material may be reproduced, in any form or by any means, without permission in writing from the publisher.

2–67.

Determine the magnitude and coordinate direction angles of $\mathbf{F}_3$ so that the resultant of the three forces acts along the positive y axis and has a magnitude of 600 lb.

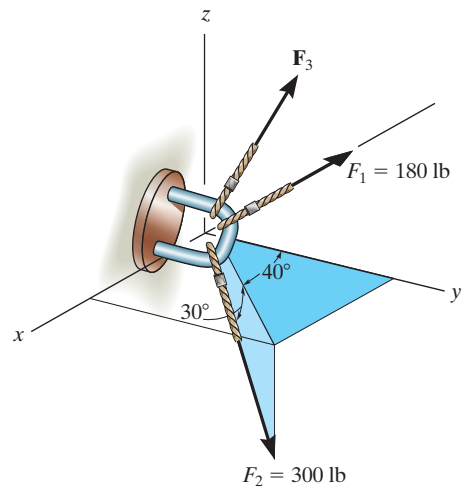

SOLUTION

$F_{Rx} = \Sigma F_x \; ; \qquad 0 = -180 + 300 \cos 30° \sin 40° + F_3 \cos \alpha$

$F_{Ry} = \Sigma F_y \; ; \qquad 600 = 300 \cos 30° \cos 40° + F_3 \cos \beta$

$F_{Rz} = \Sigma F_z \; ; \qquad 0 = -300 \sin 30° + F_3 \cos \gamma$

$\cos^2 \alpha + \cos^2 \beta + \cos^2 \gamma = 1$

Solving:

$F_3 = 428 \text{ lb}$ **Ans.**

$\alpha = 88.3°$ **Ans.**

$\beta = 20.6°$ **Ans.**

$\gamma = 69.5°$ **Ans.**

Ans:
$F_3 = 428$ lb
$\alpha = 88.3°$
$\beta = 20.6°$
$\gamma = 69.5°$

Engineering Mechanics Statics 14th edition Hibbeler Solutions Manual

© 2016 Pearson Education, Inc., Upper Saddle River, NJ. All rights reserved. This material is protected under all copyright laws as they currently exist. No portion of this material may be reproduced, in any form or by any means, without permission in writing from the publisher.

***2–68.**

Determine the magnitude and coordinate direction angles of $\mathbf{F}_3$ so that the resultant of the three forces is zero.

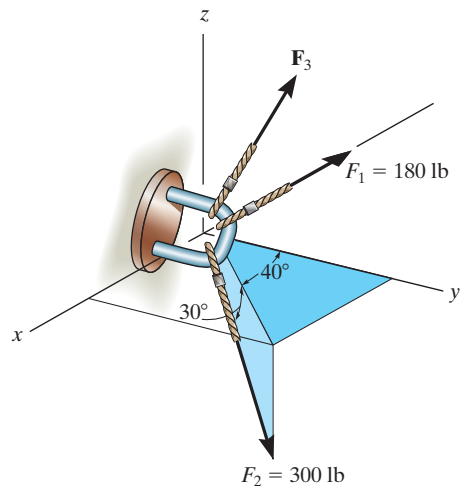

SOLUTION

$F_{Rx} = \Sigma F_x; \qquad 0 = -180 + 300 \cos 30° \sin 40° + F_3 \cos \alpha$

$F_{Ry} = \Sigma F_y; \qquad 0 = 300 \cos 30° \cos 40° + F_3 \cos \beta$

$F_{Rz} = \Sigma F_z; \qquad 0 = -300 \sin 30° + F_3 \cos \gamma$

$\cos^2\alpha + \cos^2\beta + \cos^2\gamma = 1$

Solving:

$F_3 = 250 \text{ lb}$ **Ans.**

$\alpha = 87.0°$ **Ans.**

$\beta = 143°$ **Ans.**

$\gamma = 53.1°$ **Ans.**

Ans:
$F_3 = 250$ lb
$\alpha = 87.0°$
$\beta = 143°$
$\gamma = 53.1°$

Engineering Mechanics Statics 14th edition Hibbeler Solutions Manual

© 2016 Pearson Education, Inc., Upper Saddle River, NJ. All rights reserved. This material is protected under all copyright laws as they currently exist. No portion of this material may be reproduced, in any form or by any means, without permission in writing from the publisher.

2–69.

Determine the magnitude and coordinate direction angles of the resultant force, and sketch this vector on the coordinate system.

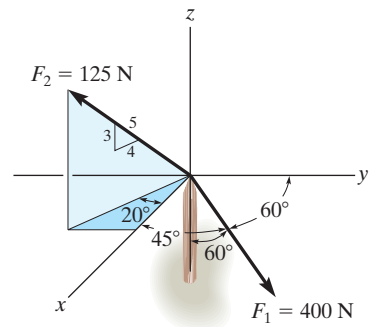

SOLUTION

Cartesian Vector Notation. For $\mathbf{F}_1$ and $\mathbf{F}_2$,

$$\mathbf{F}_1 = 400\,(\cos 45°\mathbf{i} + \cos 60°\mathbf{j} - \cos 60°\mathbf{k}) = \{282.84\mathbf{i} + 200\mathbf{j} - 200\mathbf{k}\}\text{ N}$$

$$\mathbf{F}_2 = 125\left[\frac{4}{5}(\cos 20°)\mathbf{i} - \frac{4}{5}(\sin 20°)\mathbf{j} + \frac{3}{5}\mathbf{k}\right] = \{93.97\mathbf{i} - 34.20\mathbf{j} + 75.0\mathbf{k}\}$$

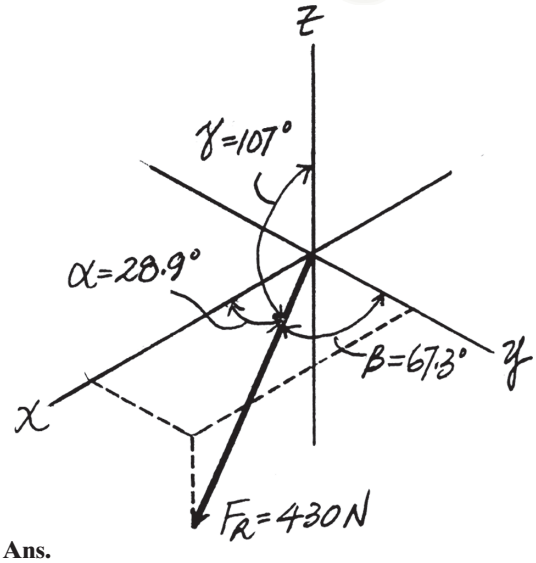

Resultant Force.

$$\mathbf{F}_R = \mathbf{F}_1 + \mathbf{F}_2$$
$$= \{282.84\mathbf{i} + 200\mathbf{j} - 200\mathbf{k}\} + \{93.97\mathbf{i} - 34.20\mathbf{j} + 75.0\mathbf{k}\}$$
$$= \{376.81\mathbf{i} + 165.80\mathbf{j} - 125.00\mathbf{k}\}\text{ N}$$

The magnitude of the resultant force is

$$F_R = \sqrt{(F_R)_x^2 + (F_R)_y^2 + (F_R)_z^2} = \sqrt{376.81^2 + 165.80^2 + (-125.00)^2}$$
$$= 430.23\text{ N} = 430\text{ N} \qquad \textbf{Ans.}$$

The coordinate direction angles are

$$\cos\alpha = \frac{(F_R)_x}{F_R} = \frac{376.81}{430.23}; \qquad \alpha = 28.86° = 28.9° \qquad \textbf{Ans.}$$

$$\cos\beta = \frac{(F_R)_y}{F_R} = \frac{165.80}{430.23}; \qquad \beta = 67.33° = 67.3° \qquad \textbf{Ans.}$$

$$\cos\gamma = \frac{(F_R)_z}{F_R} = \frac{-125.00}{430.23}; \qquad \gamma = 106.89° = 107° \qquad \textbf{Ans.}$$

Ans:
$F_R = 430$ N
$\alpha = 28.9°$
$\beta = 67.3°$
$\gamma = 107°$

Engineering Mechanics Statics 14th edition Hibbeler Solutions Manual

© 2016 Pearson Education, Inc., Upper Saddle River, NJ. All rights reserved. This material is protected under all copyright laws as they currently exist. No portion of this material may be reproduced, in any form or by any means, without permission in writing from the publisher.

2–70.

Determine the magnitude and coordinate direction angles of the resultant force, and sketch this vector on the coordinate system.

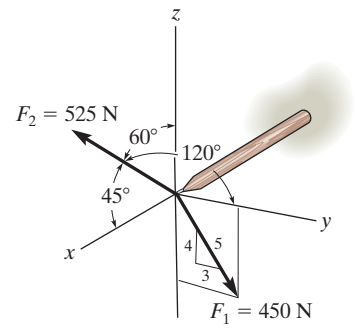

SOLUTION

Cartesian Vector Notation. For $\mathbf{F}_1$ and $\mathbf{F}_2$,

$$\mathbf{F}_1 = 450\left(\frac{3}{5}\mathbf{j} - \frac{4}{5}\mathbf{k}\right) = \{270\mathbf{j} - 360\mathbf{k}\}\text{ N}$$

$$\mathbf{F}_2 = 525\,(\cos 45°\mathbf{i} + \cos 120°\mathbf{j} + \cos 60°\mathbf{k}) = \{371.23\mathbf{i} - 262.5\mathbf{j} + 262.5\mathbf{k}\}\text{ N}$$

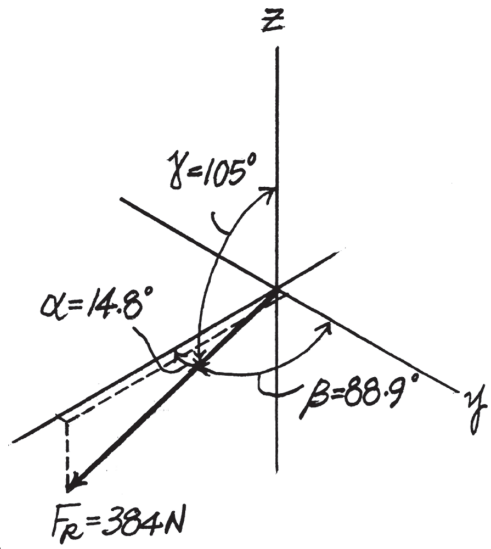

Resultant Force.

$$\begin{aligned}\mathbf{F}_R &= \mathbf{F}_1 + \mathbf{F}_2\\ &= \{270\mathbf{j} - 360\mathbf{k}\} + \{371.23\mathbf{i} - 262.5\mathbf{j} + 262.5\mathbf{k}\}\\ &= \{371.23\mathbf{i} + 7.50\mathbf{j} - 97.5\mathbf{k}\}\text{ N}\end{aligned}$$

The magnitude of the resultant force is

$$F_R = \sqrt{(F_R)_x^2 + (F_R)_y^2 + (F_R)_z^2} = \sqrt{371.23^2 + 7.50^2 + (-97.5)^2}$$

$$= 383.89\text{ N} = 384\text{ N} \qquad \textbf{Ans.}$$

The coordinate direction angles are

$$\cos\alpha = \frac{(F_R)_x}{F_R} = \frac{371.23}{383.89}; \qquad \alpha = 14.76° = 14.8° \qquad \textbf{Ans.}$$

$$\cos\beta = \frac{(F_R)_y}{F_R} = \frac{7.50}{383.89}; \qquad \beta = 88.88° = 88.9° \qquad \textbf{Ans.}$$

$$\cos\gamma = \frac{(F_R)_z}{F_R} = \frac{-97.5}{383.89}; \qquad \gamma = 104.71° = 105° \qquad \textbf{Ans.}$$

Ans:

$$F_R = 384\text{ N}$$

$$\cos\alpha = \frac{371.23}{383.89};\ \alpha = 14.8°$$

$$\cos\beta = \frac{7.50}{383.89};\ \beta = 88.9°$$

$$\cos\gamma = \frac{-97.5}{383.89};\ \gamma = 105°$$

Engineering Mechanics Statics 14th edition Hibbeler Solutions Manual

© 2016 Pearson Education, Inc., Upper Saddle River, NJ. All rights reserved. This material is protected under all copyright laws as they currently exist. No portion of this material may be reproduced, in any form or by any means, without permission in writing from the publisher.

2–71.

Specify the magnitude and coordinate direction angles α_1, β_1, γ_1 of $\mathbf{F}_1$ so that the resultant of the three forces acting on the bracket is $\mathbf{F}_R = \{-350\mathbf{k}\}$ lb. Note that $\mathbf{F}_3$ lies in the x–y plane.

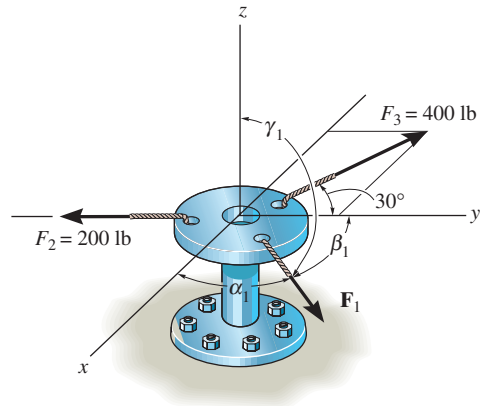

SOLUTION

$\mathbf{F}_1 = F_x\,\mathbf{i} + F_y\,\mathbf{j} + F_z\,\mathbf{k}$

$\mathbf{F}_2 = -200\,\mathbf{j}$

$\mathbf{F}_3 = -400 \sin 30°\,\mathbf{i} + 400 \cos 30°\,\mathbf{j}$

$= -200\,\mathbf{i} + 346.4\,\mathbf{j}$

$\mathbf{F}_R = \Sigma\mathbf{F}$

$-350\,\mathbf{k} = F_x\,\mathbf{i} + F_y\,\mathbf{j} + F_z\,\mathbf{k} - 200\,\mathbf{j} - 200\,\mathbf{i} + 346.4\,\mathbf{j}$

$0 = F_x - 200\,; \qquad F_x = 200 \text{ lb}$

$0 = F_y - 200 + 346.4\,; \qquad F_y = -146.4 \text{ lb}$

$F_z = -350 \text{ lb}$

$F_1 = \sqrt{(200)^2 + (-146.4)^2 + (-350)^2}$

$F_1 = 425.9 \text{ lb} = 429 \text{ lb}$ **Ans.**

$\alpha_1 = \cos^{-1}\left(\dfrac{200}{428.9}\right) = 62.2°$ **Ans.**

$\beta_1 = \cos^{-1}\left(\dfrac{-146.4}{428.9}\right) = 110°$ **Ans.**

$\gamma_1 = \cos^{-1}\left(\dfrac{-350}{428.9}\right) = 145°$ **Ans.**

Ans:
$F_1 = 429$ lb
$\alpha_1 = 62.2°$
$\beta_1 = 110°$
$\gamma_1 = 145°$

Engineering Mechanics Statics 14th edition Hibbeler Solutions Manual

© 2016 Pearson Education, Inc., Upper Saddle River, NJ. All rights reserved. This material is protected under all copyright laws as they currently exist. No portion of this material may be reproduced, in any form or by any means, without permission in writing from the publisher.

***2–72.**

Two forces $\mathbf{F}_1$ and $\mathbf{F}_2$ act on the screw eye. If the resultant force $\mathbf{F}_R$ has a magnitude of 150 lb and the coordinate direction angles shown, determine the magnitude of $\mathbf{F}_2$ and its coordinate direction angles.

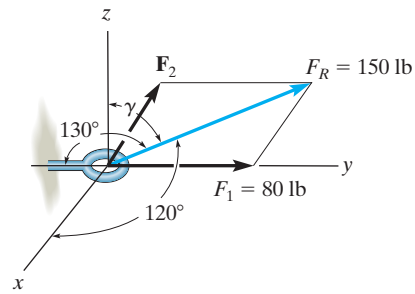

SOLUTION

Cartesian Vector Notation. For $\mathbf{F}_R$, γ can be determined from

$$\cos^2\alpha + \cos^2\beta + \cos^2\gamma = 1$$

$$\cos^2 120° + \cos^2 50° + \cos^2\gamma = 1$$

$$\cos\gamma = \pm 0.5804$$

Here $\gamma < 90°$, then

$$\gamma = 54.52°$$

Thus

$$\mathbf{F}_R = 150(\cos 120°\mathbf{i} + \cos 50°\mathbf{j} + \cos 54.52°\mathbf{k})$$

$$= \{-75.0\mathbf{i} + 96.42\mathbf{j} + 87.05\mathbf{k}\}\text{ lb}$$

Also

$$\mathbf{F}_1 = \{80\mathbf{j}\}\text{ lb}$$

Resultant Force.

$$\mathbf{F}_R = \mathbf{F}_1 + \mathbf{F}_2$$

$$\{-75.0\mathbf{i} + 96.42\mathbf{j} + 87.05\mathbf{k}\} = \{80\mathbf{j}\} + \mathbf{F}_2$$

$$F_2 = \{-75.0\mathbf{i} + 16.42\mathbf{j} + 87.05\mathbf{k}\}\text{ lb}$$

Thus, the magnitude of $\mathbf{F}_2$ is

$$F_2 = \sqrt{(F_2)_x + (F_2)_y + (F_2)_z} = \sqrt{(-75.0)^2 + 16.42^2 + 87.05^2}$$

$$= 116.07\text{ lb} = 116\text{ lb} \qquad \textbf{Ans.}$$

And its coordinate direction angles are

$$\cos\alpha_2 = \frac{(F_2)_x}{F_2} = \frac{-75.0}{116.07}; \qquad \alpha_2 = 130.25° = 130° \qquad \textbf{Ans.}$$

$$\cos\beta_2 = \frac{(F_2)_y}{F_2} = \frac{16.42}{116.07}; \qquad \beta_2 = 81.87° = 81.9° \qquad \textbf{Ans.}$$

$$\cos\gamma_2 = \frac{(F_2)_z}{F_2} = \frac{87.05}{116.07}; \qquad \gamma_2 = 41.41° = 41.4° \qquad \textbf{Ans.}$$

Ans:
$F_R = 116$ lb
$\cos\alpha_2 = 130°$
$\cos\beta_2 = 81.9°$
$\cos\gamma_2 = 41.4°$

Engineering Mechanics Statics 14th edition Hibbeler Solutions Manual

© 2016 Pearson Education, Inc., Upper Saddle River, NJ. All rights reserved. This material is protected under all copyright laws as they currently exist. No portion of this material may be reproduced, in any form or by any means, without permission in writing from the publisher.

2–73.

Express each force in Cartesian vector form.

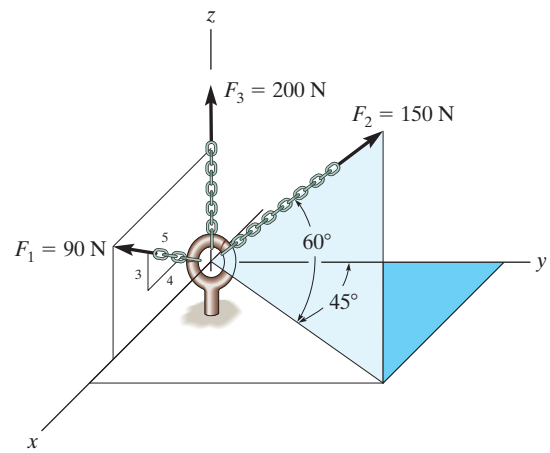

SOLUTION

Cartesian Vector Notation. For $\mathbf{F}_1$, $\mathbf{F}_2$ and $\mathbf{F}_3$,

$$\mathbf{F}_1 = 90\left(\frac{4}{5}\mathbf{i} + \frac{3}{5}\mathbf{k}\right) = \{72.0\mathbf{i} + 54.0\mathbf{k}\}\text{ N}$$ **Ans.**

$$\mathbf{F}_2 = 150\,(\cos 60°\sin 45°\mathbf{i} + \cos 60°\cos 45°\mathbf{j} + \sin 60°\mathbf{k})$$

$$= \{53.03\mathbf{i} + 53.03\mathbf{j} + 129.90\mathbf{k}\}\text{ N}$$

$$= \{53.0\mathbf{i} + 53.0\mathbf{j} + 130\mathbf{k}\}\text{ N}$$ **Ans.**

$$\mathbf{F}_3 = \{200\,\mathbf{k}\}$$ **Ans.**

Ans:
$\mathbf{F}_1 = \{72.0\mathbf{i} + 54.0\mathbf{k}\}$ N
$\mathbf{F}_2 = \{53.0\mathbf{i} + 53.0\mathbf{j} + 130\mathbf{k}\}$ N
$\mathbf{F}_3 = \{200\,\mathbf{k}\}$

Engineering Mechanics Statics 14th edition Hibbeler Solutions Manual

© 2016 Pearson Education, Inc., Upper Saddle River, NJ. All rights reserved. This material is protected under all copyright laws as they currently exist. No portion of this material may be reproduced, in any form or by any means, without permission in writing from the publisher.

2–74.

Determine the magnitude and coordinate direction angles of the resultant force, and sketch this vector on the coordinate system.

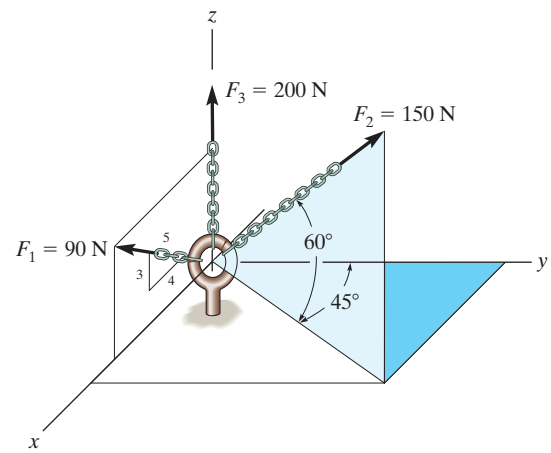

SOLUTION

Cartesian Vector Notation. For $\mathbf{F}_1$, $\mathbf{F}_2$ and $\mathbf{F}_3$,

$$\mathbf{F}_1 = 90\left(\frac{4}{5}\mathbf{i} + \frac{3}{5}\mathbf{k}\right) = \{72.0\mathbf{i} + 54.0\mathbf{k}\}\text{ N}$$

$$\mathbf{F}_2 = 150\,(\cos 60°\sin 45°\mathbf{i} + \cos 60°\cos 45°\mathbf{j} + \sin 60°\mathbf{k})$$

$$= \{53.03\mathbf{i} + 53.03\mathbf{j} + 129.90\mathbf{k}\}\text{ N}$$

$$\mathbf{F}_3 = \{200\text{ k}\}\text{ N}$$

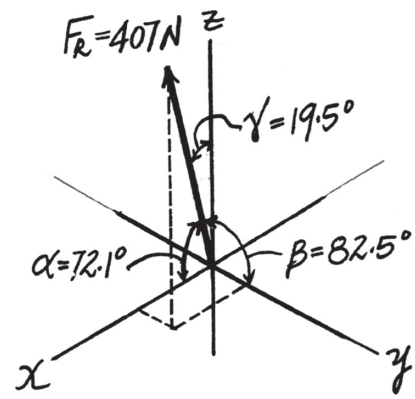

Resultant Force.

$$\mathbf{F} = \mathbf{F}_1 + \mathbf{F}_2 + \mathbf{F}_3$$

$$= (72.0\mathbf{i} + 54.0\mathbf{k}) + (53.03\mathbf{i} + 53.03\mathbf{j} + 129.90\mathbf{k}) + (200\mathbf{k})$$

$$= \{125.03\mathbf{i} + 53.03\mathbf{j} + 383.90\}\text{ N}$$

The magnitude of the resultant force is

$$F_R = \sqrt{(F_R)_x^2 + (F_R)_y^2 + (F_R)_z^2} = \sqrt{125.03^2 + 53.03^2 + 383.90^2}$$

$$= 407.22\text{ N} = 407\text{ N} \qquad \textbf{Ans.}$$

And the coordinate direction angles are

$$\cos\alpha = \frac{(F_R)_x}{F_R} = \frac{125.03}{407.22}; \qquad \alpha = 72.12° = 72.1° \qquad \textbf{Ans.}$$

$$\cos\beta = \frac{(F_R)_y}{F_R} = \frac{53.03}{407.22}; \qquad \beta = 82.52° = 82.5° \qquad \textbf{Ans.}$$

$$\cos\gamma = \frac{(F_R)_z}{F_R} = \frac{383.90}{407.22}; \qquad \gamma = 19.48° = 19.5° \qquad \textbf{Ans.}$$

Ans:
$F_R = 407$ N
$\alpha = 72.1°$
$\beta = 82.5°$
$\gamma = 19.5°$

Engineering Mechanics Statics 14th edition Hibbeler Solutions Manual

© 2016 Pearson Education, Inc., Upper Saddle River, NJ. All rights reserved. This material is protected under all copyright laws as they currently exist. No portion of this material may be reproduced, in any form or by any means, without permission in writing from the publisher.

2–75.

The spur gear is subjected to the two forces caused by contact with other gears. Express each force as a Cartesian vector.

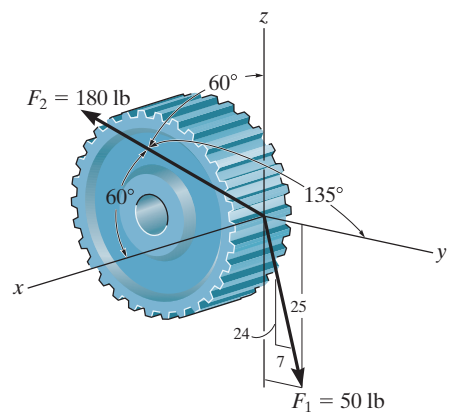

SOLUTION

$$\mathbf{F}_1 = \frac{7}{25}(50)\mathbf{j} - \frac{24}{25}(50)\mathbf{k} = \{14.0\mathbf{j} - 48.0\mathbf{k}\}\text{ lb}$$ **Ans.**

$$\mathbf{F}_2 = 180\cos 60°\mathbf{i} + 180\cos 135°\mathbf{j} + 180\cos 60°\mathbf{k}$$

$$= \{90\mathbf{i} - 127\mathbf{j} + 90\mathbf{k}\}\text{ lb}$$ **Ans.**

Ans:
$\mathbf{F}_1 = \{14.0\mathbf{j} - 48.0\mathbf{k}\}$ lb
$\mathbf{F}_2 = \{90\mathbf{i} - 127\mathbf{j} + 90\mathbf{k}\}$ lb

Engineering Mechanics Statics 14th edition Hibbeler Solutions Manual

© 2016 Pearson Education, Inc., Upper Saddle River, NJ. All rights reserved. This material is protected under all copyright laws as they currently exist. No portion of this material may be reproduced, in any form or by any means, without permission in writing from the publisher.

***2–76.**

The spur gear is subjected to the two forces caused by contact with other gears. Determine the resultant of the two forces and express the result as a Cartesian vector.

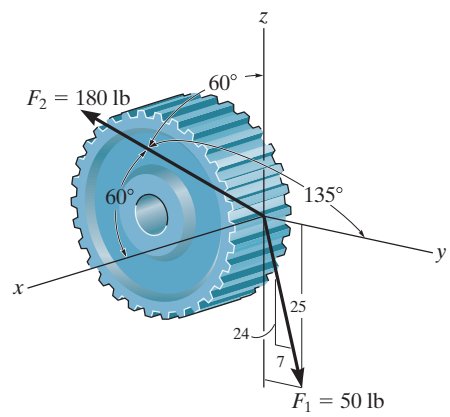

SOLUTION

$$F_{Rx} = 180 \cos 60° = 90$$

$$F_{Ry} = \frac{7}{25}(50) + 180 \cos 135° = -113$$

$$F_{Rz} = -\frac{24}{25}(50) + 180 \cos 60° = 42$$

$$\mathbf{F}_R = \{90\mathbf{i} - 113\mathbf{j} + 42\mathbf{k}\}\text{ lb}$$ **Ans.**

Ans:
$F_{Rx} = 90$
$F_{Ry} = -113$
$F_{Rz} = 42$
$\mathbf{F}_R = \{90\mathbf{i} - 113\mathbf{j} + 42\mathbf{k}\}$ lb

Engineering Mechanics Statics 14th edition Hibbeler Solutions Manual

© 2016 Pearson Education, Inc., Upper Saddle River, NJ. All rights reserved. This material is protected under all copyright laws as they currently exist. No portion of this material may be reproduced, in any form or by any means, without permission in writing from the publisher.

2–77.

Determine the magnitude and coordinate direction angles of the resultant force, and sketch this vector on the coordinate system.

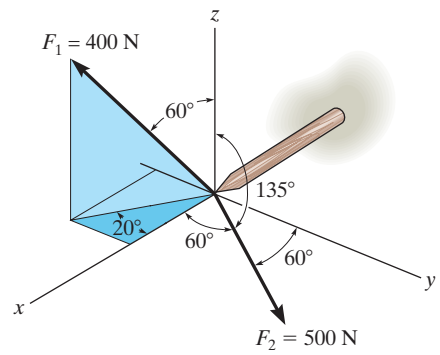

SOLUTION

Cartesian Vector Notation. For $\mathbf{F}_1$ and $\mathbf{F}_2$,

$$\mathbf{F}_1 = 400\,(\sin 60^\circ \cos 20^\circ \mathbf{i} - \sin 60^\circ \sin 20^\circ \mathbf{j} + \cos 60^\circ \mathbf{k})$$

$$= \{325.52\mathbf{i} - 118.48\mathbf{j} + 200\mathbf{k}\}\ \text{N}$$

$$\mathbf{F}_2 = 500\,(\cos 60^\circ \mathbf{i} + \cos 60^\circ \mathbf{j} + \cos 135^\circ \mathbf{k})$$

$$= \{250\mathbf{i} + 250\mathbf{j} - 353.55\mathbf{k}\}\ \text{N}$$

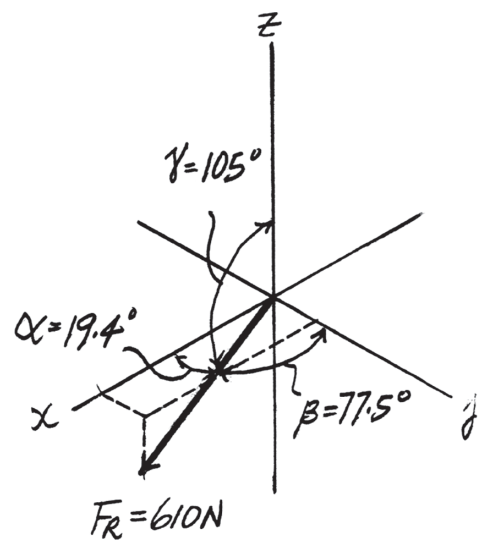

Resultant Force.

$$\mathbf{F}_R = \mathbf{F}_1 + \mathbf{F}_2$$

$$= (325.52\mathbf{i} - 118.48\mathbf{j} + 200\mathbf{k}) + (250\mathbf{i} + 250\mathbf{j} - 353.55\mathbf{k})$$

$$= \{575.52\mathbf{i} + 131.52\mathbf{j} - 153.55\,\mathbf{k}\}\ \text{N}$$

The magnitude of the resultant force is

$$F_R = \sqrt{(F_R)_x^2 + (F_R)_y^2 + (F_R)_z^2} = \sqrt{575.52^2 + 131.52^2 + (-153.55)^2}$$

$$= 610.00\ \text{N} = 610\ \text{N} \qquad \textbf{Ans.}$$

The coordinate direction angles are

$$\cos\alpha = \frac{(F_R)_x}{F_R} = \frac{575.52}{610.00} \qquad \alpha = 19.36^\circ = 19.4^\circ \qquad \textbf{Ans.}$$

$$\cos\beta = \frac{(F_R)_y}{F_R} = \frac{131.52}{610.00} \qquad \beta = 77.549^\circ = 77.5^\circ \qquad \textbf{Ans.}$$

$$\cos\gamma = \frac{(F_R)_z}{F_R} = \frac{-153.55}{610.00} \qquad \gamma = 104.58^\circ = 105^\circ \qquad \textbf{Ans.}$$

Ans:
$F_R = 610$ N
$\alpha = 19.4^\circ$
$\beta = 77.5^\circ$
$\gamma = 105^\circ$

Engineering Mechanics Statics 14th edition Hibbeler Solutions Manual

© 2016 Pearson Education, Inc., Upper Saddle River, NJ. All rights reserved. This material is protected under all copyright laws as they currently exist. No portion of this material may be reproduced, in any form or by any means, without permission in writing from the publisher.

2–78.

The two forces $\mathbf{F}_1$ and $\mathbf{F}_2$ acting at A have a resultant force of $\mathbf{F}_R = \{-100\mathbf{k}\}$ lb. Determine the magnitude and coordinate direction angles of $\mathbf{F}_2$.

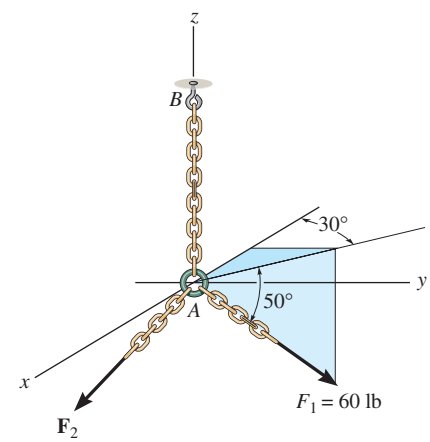

SOLUTION

Cartesian Vector Notation:

$$\mathbf{F}_R = \{-100\,\mathbf{k}\}\text{ lb}$$

$$\mathbf{F}_1 = 60\{-\cos 50^\circ \cos 30^\circ\,\mathbf{i} + \cos 50^\circ \sin 30^\circ\,\mathbf{j} - \sin 50^\circ\,\mathbf{k}\}\text{ lb}$$

$$= \{-33.40\,\mathbf{i} + 19.28\,\mathbf{j} - 45.96\,\mathbf{k}\}\text{ lb}$$

$$\mathbf{F}_2 = \{F_{2_x}\mathbf{i} + F_{2_y}\mathbf{j} + F_{2_z}\mathbf{k}\}\text{ lb}$$

Resultant Force:

$$\mathbf{F}_R = \mathbf{F}_1 + \mathbf{F}_2$$

$$-100\mathbf{k} = \{(F_{2_x} - 33.40)\,\mathbf{i} + (F_{2_y} + 19.28)\,\mathbf{j} + (F_{2_z} - 45.96)\,\mathbf{k}\}$$

Equating **i, j** and **k** components, we have

$$F_{2_x} - 33.40 = 0 \qquad F_{2_x} = 33.40\text{ lb}$$

$$F_{2_y} + 19.28 = 0 \qquad F_{2_y} = -19.28\text{ lb}$$

$$F_{2_z} - 45.96 = -100 \qquad F_{2_z} = -54.04\text{ lb}$$

The magnitude of force $\mathbf{F}_2$ is

$$F_2 = \sqrt{F_{2_x}^2 + F_{2_y}^2 + F_{2_z}^2}$$

$$= \sqrt{33.40^2 + (-19.28)^2 + (-54.04)^2}$$

$$= 66.39\text{ lb} = 66.4\text{ lb} \qquad \textbf{Ans.}$$

The coordinate direction angles for $\mathbf{F}_2$ are

$$\cos\alpha = \frac{F_{2_x}}{F_2} = \frac{33.40}{66.39} \qquad \alpha = 59.8^\circ \qquad \textbf{Ans.}$$

$$\cos\beta = \frac{F_{2_y}}{F_2} = \frac{-19.28}{66.39} \qquad \beta = 107^\circ \qquad \textbf{Ans.}$$

$$\cos\gamma = \frac{F_{2_z}}{F_2} = \frac{-54.04}{66.39} \qquad \gamma = 144^\circ \qquad \textbf{Ans.}$$

Ans:
$F_2 = 66.4$ lb
$\alpha = 59.8^\circ$
$\beta = 107^\circ$
$\gamma = 144^\circ$

Engineering Mechanics Statics 14th edition Hibbeler Solutions Manual

© 2016 Pearson Education, Inc., Upper Saddle River, NJ. All rights reserved. This material is protected under all copyright laws as they currently exist. No portion of this material may be reproduced, in any form or by any means, without permission in writing from the publisher.

2–79.

Determine the coordinate direction angles of the force $\mathbf{F}_1$ and indicate them on the figure.

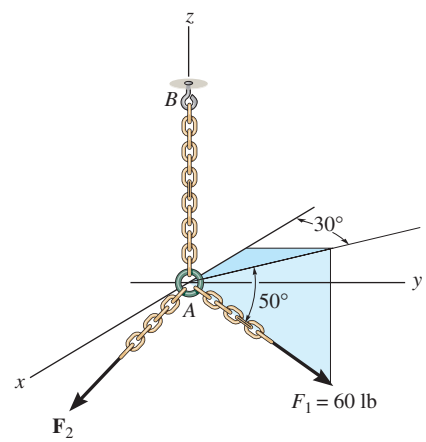

SOLUTION

Unit Vector For Force $\mathbf{F}_1$:

$$\mathbf{u}_{F_1} = -\cos 50^\circ \cos 30^\circ\, \mathbf{i} + \cos 50^\circ \sin 30^\circ\, \mathbf{j} - \sin 50^\circ\, \mathbf{k}$$

$$= -0.5567\, \mathbf{i} + 0.3214\, \mathbf{j} - 0.7660\, \mathbf{k}$$

Coordinate Direction Angles: From the unit vector obtained above, we have

$\cos\alpha = -0.5567 \qquad \alpha = 124^\circ$ **Ans.**

$\cos\beta = 0.3214 \qquad \beta = 71.3^\circ$ **Ans.**

$\cos\gamma = -0.7660 \qquad \gamma = 140^\circ$ **Ans.**

Ans:
$\alpha = 124^\circ$
$\beta = 71.3^\circ$
$\gamma = 140^\circ$

Engineering Mechanics Statics 14th edition Hibbeler Solutions Manual

© 2016 Pearson Education, Inc., Upper Saddle River, NJ. All rights reserved. This material is protected under all copyright laws as they currently exist. No portion of this material may be reproduced, in any form or by any means, without permission in writing from the publisher.

***2–80.**

The bracket is subjected to the two forces shown. Express each force in Cartesian vector form and then determine the resultant force $\mathbf{F}_R$. Find the magnitude and coordinate direction angles of the resultant force.

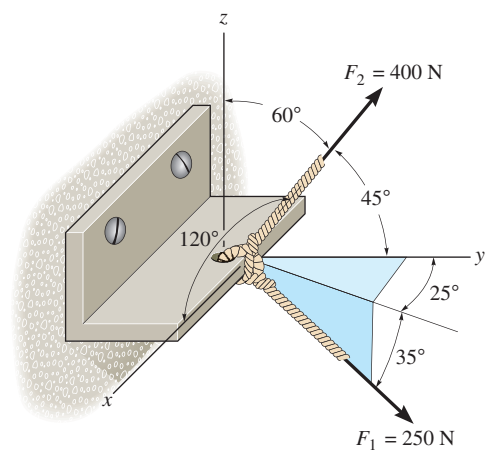

SOLUTION

Cartesian Vector Notation:

$$\mathbf{F}_1 = 250\{\cos 35° \sin 25°\mathbf{i} + \cos 35° \cos 25°\mathbf{j} - \sin 35°\mathbf{k}\}\text{ N}$$

$$= \{86.55\mathbf{i} + 185.60\mathbf{j} - 143.39\mathbf{k}\}\text{ N}$$

$$= \{86.5\mathbf{i} + 186\mathbf{j} - 143\mathbf{k}\}\text{ N} \qquad \textbf{Ans.}$$

$$\mathbf{F}_2 = 400\{\cos 120°\mathbf{i} + \cos 45°\mathbf{j} + \cos 60°\mathbf{k}\}\text{ N}$$

$$= \{-200.0\mathbf{i} + 282.84\mathbf{j} + 200.0\mathbf{k}\}\text{ N}$$

$$= \{-200\mathbf{i} + 283\mathbf{j} + 200\mathbf{k}\}\text{ N} \qquad \textbf{Ans.}$$

Resultant Force:

$$\mathbf{F}_R = \mathbf{F}_1 + \mathbf{F}_2$$

$$= \{(86.55 - 200.0)\mathbf{i} + (185.60 + 282.84)\mathbf{j} + (-143.39 + 200.0)\,\mathbf{k}\}$$

$$= \{-113.45\mathbf{i} + 468.44\mathbf{j} + 56.61\mathbf{k}\}\text{ N}$$

$$= \{-113\mathbf{i} + 468\mathbf{j} + 56.6\mathbf{k}\}\text{ N} \qquad \textbf{Ans.}$$

The magnitude of the resultant force is

$$F_R = \sqrt{F_{R_x}^2 + F_{R_y}^2 + F_{R_z}^2}$$

$$= \sqrt{(-113.45)^2 + 468.44^2 + 56.61^2}$$

$$= 485.30\text{ N} = 485\text{ N} \qquad \textbf{Ans.}$$

The coordinate direction angles are

$$\cos\alpha = \frac{F_{R_x}}{F_R} = \frac{-113.45}{485.30} \qquad \alpha = 104° \qquad \textbf{Ans.}$$

$$\cos\beta = \frac{F_{R_y}}{F_R} = \frac{468.44}{485.30} \qquad \beta = 15.1° \qquad \textbf{Ans.}$$

$$\cos\gamma = \frac{F_{R_z}}{F_R} = \frac{56.61}{485.30} \qquad \gamma = 83.3° \qquad \textbf{Ans.}$$

Ans:
$\mathbf{F}_1 = \{86.5\mathbf{i} + 186\mathbf{j} - 143\mathbf{k}\}$ N
$\mathbf{F}_2 = \{-200\mathbf{i} + 283\mathbf{j} + 200\mathbf{k}\}$ N
$\mathbf{F}_R = \{-113\mathbf{i} + 468\mathbf{j} + 56.6\mathbf{k}\}$ N
$F_R = 485$ N
$\alpha = 104°$
$\beta = 15.1°$
$\gamma = 83.3°$

Engineering Mechanics Statics 14th edition Hibbeler Solutions Manual

© 2016 Pearson Education, Inc., Upper Saddle River, NJ. All rights reserved. This material is protected under all copyright laws as they currently exist. No portion of this material may be reproduced, in any form or by any means, without permission in writing from the publisher.

2–81.

If the coordinate direction angles for $\mathbf{F}_3$ are $\alpha_3 = 120°$, $\beta_3 = 60°$ and $\gamma_3 = 45°$, determine the magnitude and coordinate direction angles of the resultant force acting on the eyebolt.

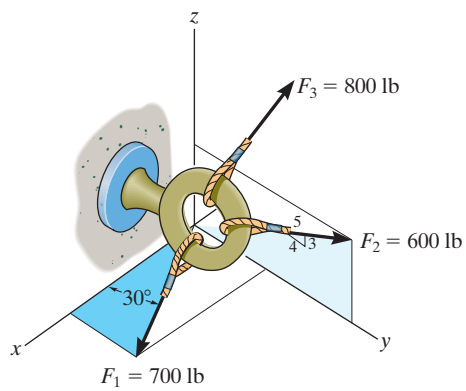

SOLUTION

Force Vectors: By resolving $\mathbf{F}_1$, $\mathbf{F}_2$ and $\mathbf{F}_3$ into their x, y, and z components, as shown in Figs. a, b, and c, respectively, $\mathbf{F}_1$, $\mathbf{F}_2$ and $\mathbf{F}_3$ can be expressed in Cartesian vector form as

$$\mathbf{F}_1 = 700\cos 30°(+\mathbf{i}) + 700\sin 30°(+\mathbf{j}) = \{606.22\mathbf{i} + 350\mathbf{j}\}\text{ lb}$$

$$\mathbf{F}_2 = 0\mathbf{i} + 600\left(\frac{4}{5}\right)(+\mathbf{j}) + 600\left(\frac{3}{5}\right)(+\mathbf{k}) = \{480\mathbf{j} + 360\mathbf{k}\}\text{ lb}$$

$$\mathbf{F}_3 = 800\cos 120°\mathbf{i} + 800\cos 60°\mathbf{j} + 800\cos 45°\mathbf{k} = [-400\mathbf{i} + 400\mathbf{j} + 565.69\mathbf{k}]\text{ lb}$$

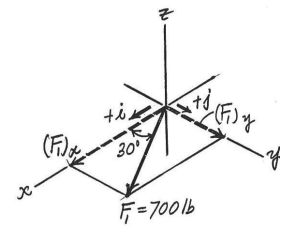

(a)

Resultant Force: By adding $\mathbf{F}_1$, $\mathbf{F}_2$ and $\mathbf{F}_3$ vectorally, we obtain $\mathbf{F}_R$. Thus,

$$\mathbf{F}_R = \mathbf{F}_1 + \mathbf{F}_2 + \mathbf{F}_3$$

$$= (606.22\mathbf{i} + 350\mathbf{j}) + (480\mathbf{j} + 360\mathbf{k}) + (-400\mathbf{i} + 400\mathbf{j} + 565.69\mathbf{k})$$

$$= [206.22\mathbf{i} + 1230\mathbf{j} + 925.69\mathbf{k}]\text{ lb}$$

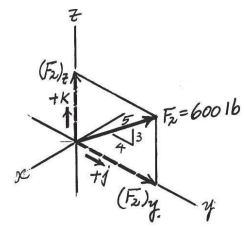

(b)

The magnitude of $\mathbf{F}_R$ is

$$F_R = \sqrt{(F_R)_x{}^2 + (F_R)_y{}^2 + (F_R)_z{}^2}$$

$$= \sqrt{(206.22)^2 + (1230)^2 + (925.69)^2} = 1553.16\text{ lb} = 1.55\text{ kip} \qquad \textbf{Ans.}$$

The coordinate direction angles of $\mathbf{F}_R$ are

$$\alpha = \cos^{-1}\left[\frac{(F_R)_x}{F_R}\right] = \cos^{-1}\left(\frac{206.22}{1553.16}\right) = 82.4° \qquad \textbf{Ans.}$$

$$\beta = \cos^{-1}\left[\frac{(F_R)_y}{F_R}\right] = \cos^{-1}\left(\frac{1230}{1553.16}\right) = 37.6° \qquad \textbf{Ans.}$$

$$\gamma = \cos^{-1}\left[\frac{(F_R)_z}{F_R}\right] = \cos^{-1}\left(\frac{925.69}{1553.16}\right) = 53.4° \qquad \textbf{Ans.}$$

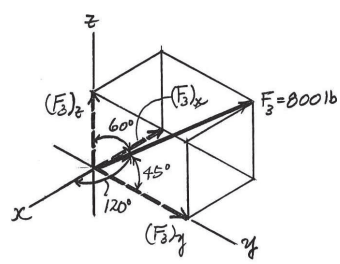

(c)

Ans:
$F_R = 1.55$ kip
$\alpha = 82.4°$
$\beta = 37.6°$
$\gamma = 53.4°$

Engineering Mechanics Statics 14th edition Hibbeler Solutions Manual

© 2016 Pearson Education, Inc., Upper Saddle River, NJ. All rights reserved. This material is protected under all copyright laws as they currently exist. No portion of this material may be reproduced, in any form or by any means, without permission in writing from the publisher.

2–82.

If the coordinate direction angles for $\mathbf{F}_3$ are $\alpha_3 = 120°$, $\beta_3 = 45°$ and $\gamma_3 = 60°$, determine the magnitude and coordinate direction angles of the resultant force acting on the eyebolt.

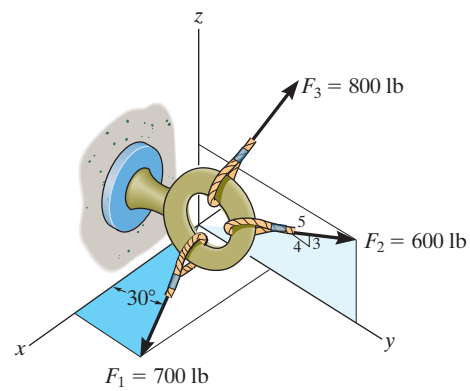

SOLUTION

Force Vectors: By resolving $\mathbf{F}_1$, $\mathbf{F}_2$ and $\mathbf{F}_3$ into their x, y, and z components, as shown in Figs. a, b, and c, respectively, $\mathbf{F}_1$, $\mathbf{F}_2$, and $\mathbf{F}_3$ can be expressed in Cartesian vector form as

$$\mathbf{F}_1 = 700\cos 30°(+\mathbf{i}) + 700\sin 30°(+\mathbf{j}) = \{606.22\mathbf{i} + 350\mathbf{j}\}\text{ lb}$$

$$\mathbf{F}_2 = 0\mathbf{i} + 600\left(\frac{4}{5}\right)(+\mathbf{j}) + 600\left(\frac{3}{5}\right)(+\mathbf{k}) = \{480\mathbf{j} + 360\mathbf{k}\}\text{ lb}$$

$$\mathbf{F}_3 = 800\cos 120°\mathbf{i} + 800\cos 45°\mathbf{j} + 800\cos 60°\mathbf{k} = \{-400\mathbf{i} + 565.69\mathbf{j} + 400\mathbf{k}\}\text{ lb}$$

$$\mathbf{F}_R = \mathbf{F}_1 + \mathbf{F}_2 + \mathbf{F}_3$$

$$= 606.22\mathbf{i} + 350\mathbf{j} + 480\mathbf{j} + 360\mathbf{k} - 400\mathbf{i} + 565.69\mathbf{j} + 400\mathbf{k}$$

$$= \{206.22\mathbf{i} + 1395.69\mathbf{j} + 760\mathbf{k}\}\text{ lb}$$

$$F_R = \sqrt{(206.22)^2 + (1395.69)^2 + (760)^2}$$

$$= 1602.52\text{ lb} = 1.60\text{ kip} \qquad \textbf{Ans.}$$

$$\alpha = \cos^{-1}\left(\frac{206.22}{1602.52}\right) = 82.6° \qquad \textbf{Ans.}$$

$$\beta = \cos^{-1}\left(\frac{1395.69}{1602.52}\right) = 29.4° \qquad \textbf{Ans.}$$

$$\gamma = \cos^{-1}\left(\frac{760}{1602.52}\right) = 61.7° \qquad \textbf{Ans.}$$

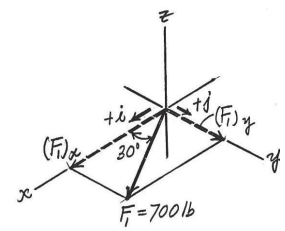

(a)

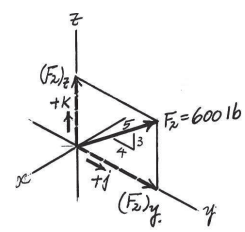

(b)

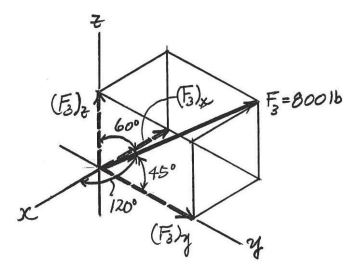

(c)

Ans:
$F_R = 1.60$ kip
$\alpha = 82.6°$
$\beta = 29.4°$
$\gamma = 61.7°$

Engineering Mechanics Statics 14th edition Hibbeler Solutions Manual

© 2016 Pearson Education, Inc., Upper Saddle River, NJ. All rights reserved. This material is protected under all copyright laws as they currently exist. No portion of this material may be reproduced, in any form or by any means, without permission in writing from the publisher.

2–83.

If the direction of the resultant force acting on the eyebolt is defined by the unit vector $\mathbf{u}_{F_R} = \cos 30°\mathbf{j} + \sin 30°\mathbf{k}$, determine the coordinate direction angles of $\mathbf{F}_3$ and the magnitude of $\mathbf{F}_R$.

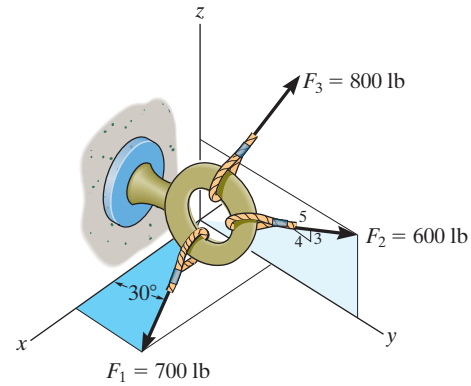

SOLUTION

Force Vectors: By resolving $\mathbf{F}_1$, $\mathbf{F}_2$ and $\mathbf{F}_3$ into their x, y, and z components, as shown in Figs. a, b, and c, respectively, $\mathbf{F}_1$, $\mathbf{F}_2$, and $\mathbf{F}_3$ can be expressed in Cartesian vector form as

$$\mathbf{F}_1 = 700 \cos 30°(+\mathbf{i}) + 700 \sin 30°(+\mathbf{j}) = \{606.22\mathbf{i} + 350\mathbf{j}\}\text{ lb}$$

$$\mathbf{F}_2 = 0\mathbf{i} + 600\left(\frac{4}{5}\right)(+\mathbf{j}) + 600\left(\frac{3}{5}\right)(+\mathbf{k}) = \{480\mathbf{j} + 360\mathbf{k}\}\text{ lb}$$

$$\mathbf{F}_3 = 800 \cos \alpha_3\mathbf{i} + 800 \cos \beta_3\mathbf{j} + 800 \cos \gamma_3\mathbf{k}$$

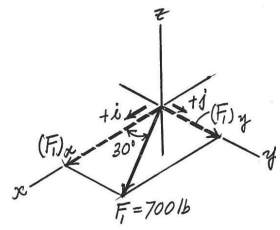

(a)

Since the direction of $\mathbf{F}_R$ is defined by $\mathbf{u}_{F_R} = \cos 30°\mathbf{j} + \sin 30°\mathbf{k}$, it can be written in Cartesian vector form as

$$\mathbf{F}_R = F_R\mathbf{u}_{F_R} = F_R(\cos 30°\mathbf{j} + \sin 30°\mathbf{k}) = 0.8660F_R\mathbf{j} + 0.5F_R\mathbf{k}$$

Resultant Force: By adding $\mathbf{F}_1$, $\mathbf{F}_2$, and $\mathbf{F}_3$ vectorally, we obtain $\mathbf{F}_R$. Thus,

$$\mathbf{F}_R = \mathbf{F}_1 + \mathbf{F}_2 + \mathbf{F}_3$$

$$0.8660F_R\mathbf{j} + 0.5F_R\mathbf{k} = (606.22\mathbf{i} + 350\mathbf{j}) + (480\mathbf{j} + 360\mathbf{k}) + (800 \cos \alpha_3\mathbf{i} + 800 \cos \beta_3\mathbf{j} + 800 \cos \gamma_3\mathbf{k})$$

$$0.8660F_R\mathbf{j} + 0.5F_R\mathbf{k} = (606.22 + 800 \cos \alpha_3)\mathbf{i} + (350 + 480 + 800 \cos \beta_3)\mathbf{j} + (360 + 800 \cos \gamma_3)\mathbf{k}$$

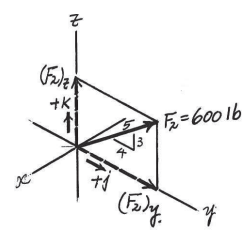

(b)

Equating the $\mathbf{i}$, $\mathbf{j}$, and $\mathbf{k}$ components, we have

$$0 = 606.22 + 800 \cos \alpha_3$$
$$800 \cos \alpha_3 = -606.22 \qquad \textbf{(1)}$$

$$0.8660F_R = 350 + 480 + 800 \cos \beta_3$$
$$800 \cos \beta_3 = 0.8660F_R - 830 \qquad \textbf{(2)}$$

$$0.5F_R = 360 + 800 \cos \gamma_3$$
$$800 \cos \gamma_3 = 0.5F_R - 360 \qquad \textbf{(3)}$$

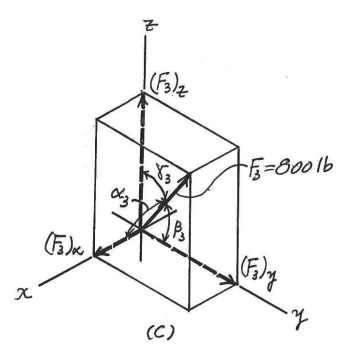

(c)

Squaring and then adding Eqs. (1), (2), and (3), yields

$$800^2\,[\cos^2 \alpha_3 + \cos^2 \beta_3 + \cos^2 \gamma_3] = F_R{}^2 - 1797.60F_R + 1{,}186{,}000 \qquad \textbf{(4)}$$

However, $\cos^2 \alpha_3 + \cos^2 \beta_3 + \cos^2 \gamma_3 = 1$. Thus, from Eq. (4)

$$F_R{}^2 - 1797.60F_R + 546{,}000 = 0$$

Solving the above quadratic equation, we have two positive roots

$F_R = 387.09\text{ N} = 387\text{ N}$ **Ans.**

$F_R = 1410.51\text{ N} = 1.41\text{ kN}$ **Ans.**

From Eq. (1),

$\alpha_3 = 139°$ **Ans.**

Substituting $F_R = 387.09$ N into Eqs. (2), and (3), yields

$\beta_3 = 128°$ $\qquad \gamma_3 = 102°$ **Ans.**

Substituting $F_R = 1410.51$ N into Eqs. (2), and (3), yields

$\beta_3 = 60.7°$ $\qquad \gamma_3 = 64.4°$ **Ans.**

Ans:
$\alpha_3 = 139°$
$\beta_3 = 128°$, $\gamma_3 = 102°$, $F_{R1} = 387$ N
$\beta_3 = 60.7°$, $\gamma_3 = 64.4°$, $F_{R2} = 1.41$ kN

Engineering Mechanics Statics 14th edition Hibbeler Solutions Manual

© 2016 Pearson Education, Inc., Upper Saddle River, NJ. All rights reserved. This material is protected under all copyright laws as they currently exist. No portion of this material may be reproduced, in any form or by any means, without permission in writing from the publisher.

***2–84.**

The pole is subjected to the force **F**, which has components acting along the *x, y, z* axes as shown. If the magnitude of **F** is 3 kN, $\beta = 30°$, and $\gamma = 75°$, determine the magnitudes of its three components.

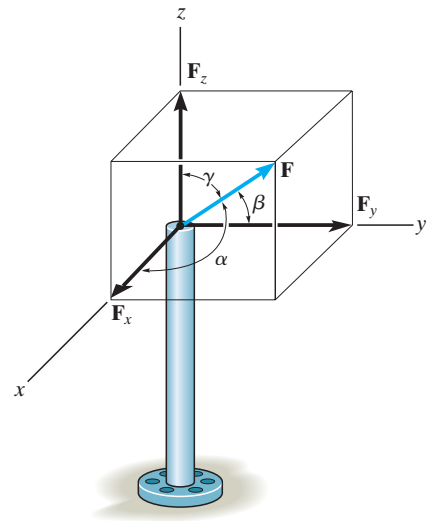

SOLUTION

$$\cos^2\alpha + \cos^2\beta + \cos^2\gamma = 1$$

$$\cos^2\alpha + \cos^2 30° + \cos^2 75° = 1$$

$$\alpha = 64.67°$$

$$F_x = 3\cos 64.67° = 1.28 \text{ kN} \qquad \textbf{Ans.}$$

$$F_y = 3\cos 30° = 2.60 \text{ kN} \qquad \textbf{Ans.}$$

$$F_z = 3\cos 75° = 0.776 \text{ kN} \qquad \textbf{Ans.}$$

Ans:
$F_x = 1.28$ kN
$F_y = 2.60$ kN
$F_z = 0.776$ kN

Engineering Mechanics Statics 14th edition Hibbeler Solutions Manual

© 2016 Pearson Education, Inc., Upper Saddle River, NJ. All rights reserved. This material is protected under all copyright laws as they currently exist. No portion of this material may be reproduced, in any form or by any means, without permission in writing from the publisher.

2–85.

The pole is subjected to the force **F** which has components $F_x = 1.5$ kN and $F_z = 1.25$ kN. If $\beta = 75°$, determine the magnitudes of **F** and $\mathbf{F}_y$.

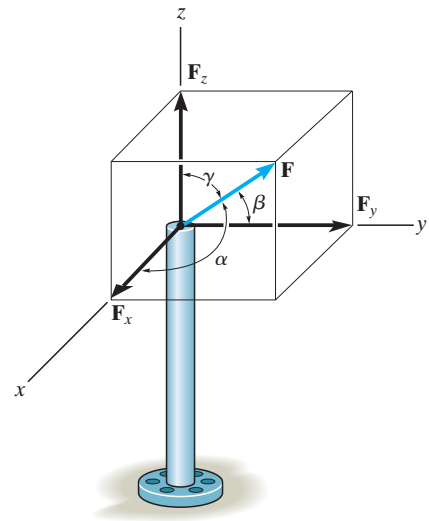

SOLUTION

$$\cos^2\alpha + \cos^2\beta + \cos^2\gamma = 1$$

$$\left(\frac{1.5}{F}\right)^2 + \cos^2 75° + \left(\frac{1.25}{F}\right)^2 = 1$$

$$F = 2.02 \text{ kN} \qquad \textbf{Ans.}$$

$$F_y = 2.02 \cos 75° = 0.523 \text{ kN} \qquad \textbf{Ans.}$$

Ans:
$F = 2.02$ kN
$F_y = 0.523$ kN

Engineering Mechanics Statics 14th edition Hibbeler Solutions Manual

© 2016 Pearson Education, Inc., Upper Saddle River, NJ. All rights reserved. This material is protected under all copyright laws as they currently exist. No portion of this material may be reproduced, in any form or by any means, without permission in writing from the publisher.

2–86.

Determine the length of the connecting rod AB by first formulating a Cartesian position vector from A to B and then determining its magnitude.

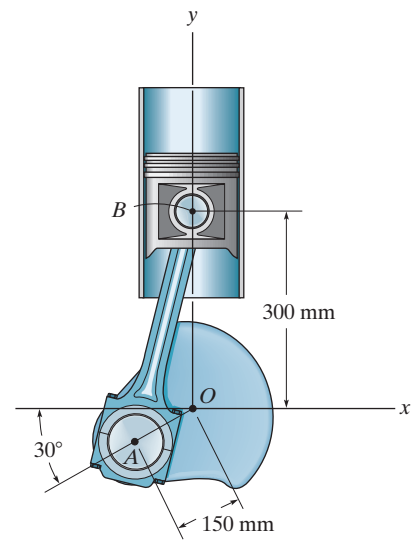

SOLUTION

Position Vector. The coordinates of points A and B are $A(-150\cos 30°, -150\sin 30°)$ mm and $B(0, 300)$ mm respectively. Then

$$\mathbf{r}_{AB} = [0 - (-150\cos 30°)]\mathbf{i} + [300 - (-150\sin 30°)]\mathbf{j}$$

$$= \{129.90\mathbf{i} + 375\mathbf{j}\}\text{ mm}$$

Thus, the magnitude of $\mathbf{r}_{AB}$ is

$$\mathbf{r}_{AB} = \sqrt{129.90^2 + 375^2} = 396.86\text{ mm} = 397\text{ mm}$$ **Ans.**

Ans:
$r_{AB} = 397$ mm

Engineering Mechanics Statics 14th edition Hibbeler Solutions Manual

© 2016 Pearson Education, Inc., Upper Saddle River, NJ. All rights reserved. This material is protected under all copyright laws as they currently exist. No portion of this material may be reproduced, in any form or by any means, without permission in writing from the publisher.

2–87.

Express force **F** as a Cartesian vector; then determine its coordinate direction angles.

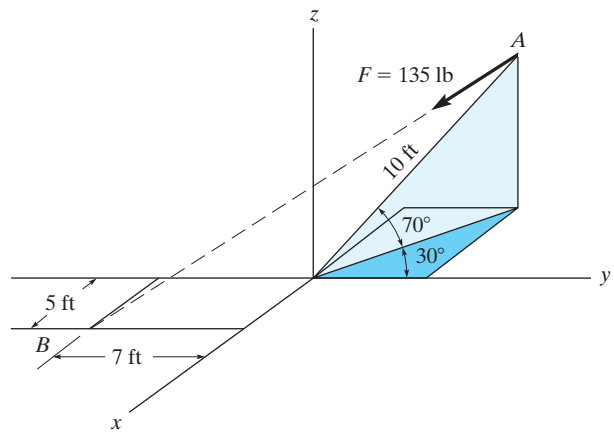

SOLUTION

$$\mathbf{r}_{AB} = (5 + 10\cos 70°\sin 30°)\mathbf{i} + (-7 - 10\cos 70°\cos 30°)\mathbf{j} - 10\sin 70°\mathbf{k}$$

$$\mathbf{r}_{AB} = \{6.710\mathbf{i} - 9.962\mathbf{j} - 9.397\mathbf{k}\}\text{ ft}$$

$$r_{AB} = \sqrt{(6.710)^2 + (-9.962)^2 + (-9.397)^2} = 15.25$$

$$\mathbf{u}_{AB} = \frac{\mathbf{r}_{AB}}{r_{AB}} = (0.4400\mathbf{i} - 0.6532\mathbf{j} - 0.6162\mathbf{k})$$

$$\mathbf{F} = 135\mathbf{u}_{AB} = (59.40\mathbf{i} - 88.18\mathbf{j} - 83.18\mathbf{k})$$

$$= \{59.4\mathbf{i} - 88.2\mathbf{j} - 83.2\mathbf{k}\}\text{ lb} \qquad \textbf{Ans.}$$

$$\alpha = \cos^{-1}\left(\frac{59.40}{135}\right) = 63.9° \qquad \textbf{Ans.}$$

$$\beta = \cos^{-1}\left(\frac{-88.18}{135}\right) = 131° \qquad \textbf{Ans.}$$

$$\gamma = \cos^{-1}\left(\frac{-83.18}{135}\right) = 128° \qquad \textbf{Ans.}$$

Ans:
$\{59.4\mathbf{i} - 88.2\mathbf{j} - 83.2\mathbf{k}\}$ lb
$\alpha = 63.9°$
$\beta = 131°$
$\gamma = 128°$

Engineering Mechanics Statics 14th edition Hibbeler Solutions Manual

© 2016 Pearson Education, Inc., Upper Saddle River, NJ. All rights reserved. This material is protected under all copyright laws as they currently exist. No portion of this material may be reproduced, in any form or by any means, without permission in writing from the publisher.

***2–88.**

Express each of the forces in Cartesian vector form and determine the magnitude and coordinate direction angles of the resultant force.

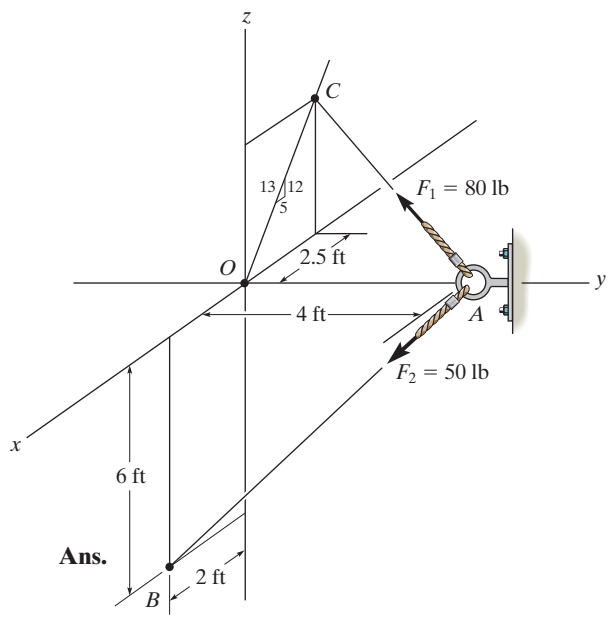

SOLUTION

$$\mathbf{r}_{AC} = \left\{-2.5\,\mathbf{i} - 4\,\mathbf{j} + \frac{12}{5}(2.5)\,\mathbf{k}\right\}\text{ ft}$$

$$\mathbf{F}_1 = 80\text{ lb}\left(\frac{\mathbf{r}_{AC}}{r_{AC}}\right) = -26.20\,\mathbf{i} - 41.93\,\mathbf{j} + 62.89\,\mathbf{k}$$

$$= \{-26.2\,\mathbf{i} - 41.9\,\mathbf{j} + 62.9\,\mathbf{k}\}\text{ lb} \qquad \textbf{Ans.}$$

$$\mathbf{r}_{AB} = \{2\,\mathbf{i} - 4\,\mathbf{j} - 6\,\mathbf{k}\}\text{ ft}$$

$$\mathbf{F}_2 = 50\text{ lb}\left(\frac{\mathbf{r}_{AB}}{r_{AB}}\right) = 13.36\,\mathbf{i} - 26.73\,\mathbf{j} - 40.09\,\mathbf{k}$$

$$= \{13.4\,\mathbf{i} - 26.7\,\mathbf{j} - 40.1\,\mathbf{k}\}\text{ lb} \qquad \textbf{Ans.}$$

$$\mathbf{F}_R = \mathbf{F}_1 + \mathbf{F}_2$$

$$= -12.84\,\mathbf{i} - 68.65\,\mathbf{j} + 22.80\,\mathbf{k}$$

$$= \{-12.8\,\mathbf{i} - 68.7\,\mathbf{j} + 22.8\,\mathbf{k}\}\text{ lb}$$

$$\mathbf{F}_R = \sqrt{(-12.84)^2\,(-68.65)^2 + (22.80)^2} = 73.47 = 73.5\text{ lb} \qquad \textbf{Ans.}$$

$$\alpha = \cos^{-1}\left(\frac{-12.84}{73.47}\right) = 100° \qquad \textbf{Ans.}$$

$$\beta = \cos^{-1}\left(\frac{-68.65}{73.47}\right) = 159° \qquad \textbf{Ans.}$$

$$\gamma = \cos^{-1}\left(\frac{22.80}{73.47}\right) = 71.9° \qquad \textbf{Ans.}$$

Ans:
$\mathbf{F}_1 = \{-26.2\,\mathbf{i} - 41.9\,\mathbf{j} + 62.9\,\mathbf{k}\}$ lb
$\mathbf{F}_2 = \{13.4\,\mathbf{i} - 26.7\,\mathbf{j} - 40.1\,\mathbf{k}\}$ lb
$\mathbf{F}_R = 73.5$ lb
$\alpha = 100°$
$\beta = 159°$
$\gamma = 71.9°$

Engineering Mechanics Statics 14th edition Hibbeler Solutions Manual

© 2016 Pearson Education, Inc., Upper Saddle River, NJ. All rights reserved. This material is protected under all copyright laws as they currently exist. No portion of this material may be reproduced, in any form or by any means, without permission in writing from the publisher.

2–89.

If $\mathbf{F} = \{350\mathbf{i} - 250\mathbf{j} - 450\mathbf{k}\}$ N and cable AB is 9 m long, determine the x, y, z coordinates of point A.

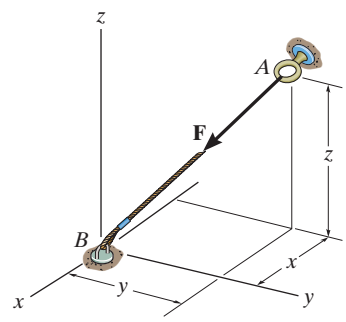

SOLUTION

Position Vector: The position vector $\mathbf{r}_{AB}$, directed from point A to point B, is given by

$$\mathbf{r}_{AB} = [0 - (-x)]\mathbf{i} + (0 - y)\mathbf{j} + (0 - z)\mathbf{k}$$

$$= x\mathbf{i} - y\mathbf{j} - z\mathbf{k}$$

Unit Vector: Knowing the magnitude of $\mathbf{r}_{AB}$ is 9 m, the unit vector for $\mathbf{r}_{AB}$ is given by

$$\mathbf{u}_{AB} = \frac{\mathbf{r}_{AB}}{r_{AB}} = \frac{x\mathbf{i} - y\mathbf{j} - z\mathbf{k}}{9}$$

The unit vector for force $\mathbf{F}$ is

$$\mathbf{u}_F = \frac{\mathbf{F}}{F} = \frac{350\mathbf{i} - 250\mathbf{j} - 450\mathbf{k}}{3\sqrt{350^2 + (-250)^2 + (-450)^2}} = 0.5623\mathbf{i} - 0.4016\mathbf{j} - 0.7229\mathbf{k}$$

Since force $\mathbf{F}$ is also directed from point A to point B, then

$$\mathbf{u}_{AB} = \mathbf{u}_F$$

$$\frac{x\mathbf{i} - y\mathbf{j} - z\mathbf{k}}{9} = 0.5623\mathbf{i} - 0.4016\mathbf{j} - 0.7229\mathbf{k}$$

Equating the $\mathbf{i}$, $\mathbf{j}$, and $\mathbf{k}$ components,

$\frac{x}{9} = 0.5623$ $\quad x = 5.06$ m **Ans.**

$\frac{-y}{9} = -0.4016$ $\quad y = 3.61$ m **Ans.**

$\frac{-z}{9} = 0.7229$ $\quad z = 6.51$ m **Ans.**

Ans:
$x = 5.06$ m
$y = 3.61$ m
$z = 6.51$ m

Engineering Mechanics Statics 14th edition Hibbeler Solutions Manual

© 2016 Pearson Education, Inc., Upper Saddle River, NJ. All rights reserved. This material is protected under all copyright laws as they currently exist. No portion of this material may be reproduced, in any form or by any means, without permission in writing from the publisher.

2–90.

The 8-m-long cable is anchored to the ground at A. If $x = 4$ m and $y = 2$ m, determine the coordinate z to the highest point of attachment along the column.

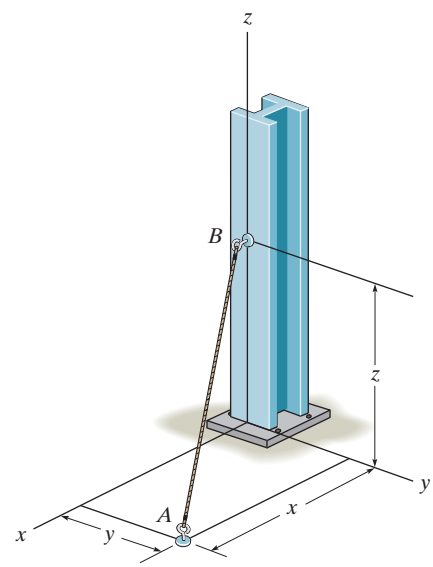

SOLUTION

$$\mathbf{r} = \{4\mathbf{i} + 2\mathbf{j} + z\mathbf{k}\}\text{ m}$$

$$r = \sqrt{(4)^2 + (2)^2 + (z)^2} = 8$$

$$z = 6.63\text{ m}$$ **Ans.**

Ans:
6.63 m

Engineering Mechanics Statics 14th edition Hibbeler Solutions Manual

© 2016 Pearson Education, Inc., Upper Saddle River, NJ. All rights reserved. This material is protected under all copyright laws as they currently exist. No portion of this material may be reproduced, in any form or by any means, without permission in writing from the publisher.

2–91.

The 8-m-long cable is anchored to the ground at A. If $z = 5$ m, determine the location $+x, +y$ of point A. Choose a value such that $x = y$.

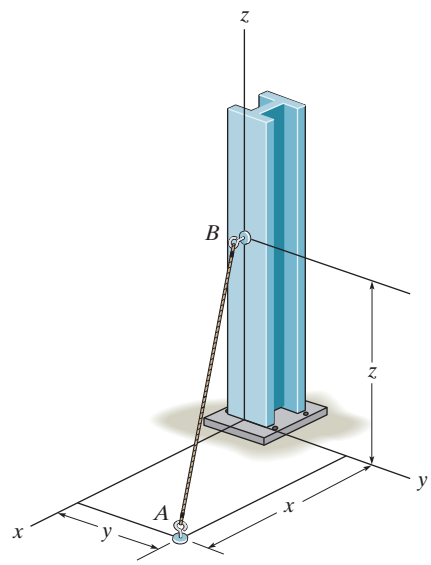

SOLUTION

$$\mathbf{r} = \{x\mathbf{i} + y\mathbf{j} + 5\mathbf{k}\}\text{ m}$$

$$r = \sqrt{(x)^2 + (y)^2 + (5)^2} = 8$$

$$x = y, \text{ thus}$$

$$2x^2 = 8^2 - 5^2$$

$$x = y = 4.42\text{ m}$$ **Ans.**

Ans:
4.42 m

Engineering Mechanics Statics 14th edition Hibbeler Solutions Manual

© 2016 Pearson Education, Inc., Upper Saddle River, NJ. All rights reserved. This material is protected under all copyright laws as they currently exist. No portion of this material may be reproduced, in any form or by any means, without permission in writing from the publisher.

***2–92.**

Express each of the forces in Cartesian vector form and determine the magnitude and coordinate direction angles of the resultant force.

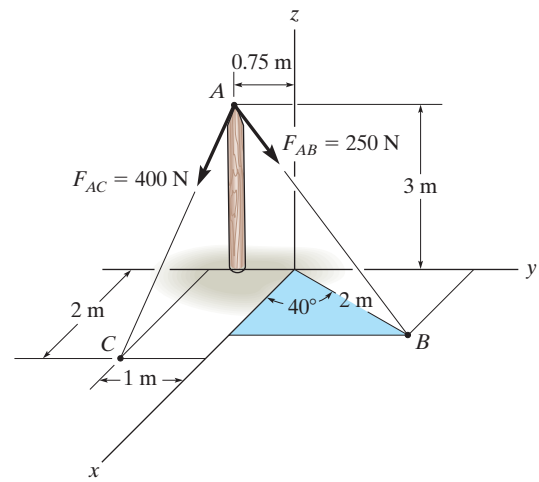

SOLUTION

Unit Vectors. The coordinates for points A, B and C are $(0, -0.75, 3)$ m, $B(2\cos 40°, 2\sin 40°, 0)$ m and $C(2, -1, 0)$ m respectively.

$$\mathbf{u}_{AB} = \frac{\mathbf{r}_{AB}}{\mathbf{r}_{AB}} = \frac{(2\cos 40° - 0)\mathbf{i} + [2\sin 40° - (-0.75)]\mathbf{j} + (0-3)\mathbf{k}}{\sqrt{(2\cos 40° - 0)^2 + [2\sin 40° - (-0.75)]^2 + (0-3)^2}}$$

$$= 0.3893\mathbf{i} + 0.5172\mathbf{j} - 0.7622\mathbf{k}$$

$$\mathbf{u}_{AC} = \frac{\mathbf{r}_{AC}}{\mathbf{r}_{AC}} = \frac{(2-0)\mathbf{i} + [-1-(-0.75)]\mathbf{j} + (0-3)\mathbf{k}}{\sqrt{(2-0)^2 + [-1-(-0.75)]^2 + (0-3)^2}}$$

$$= 0.5534\mathbf{i} - 0.0692\mathbf{j} - 0.8301\mathbf{k}$$

Force Vectors

$$\mathbf{F}_{AB} = \mathbf{F}_{AB}\mathbf{u}_{AB} = 250\,(0.3893\mathbf{i} + 0.5172\mathbf{j} - 0.7622\mathbf{k})$$

$$= \{97.32\mathbf{i} + 129.30\mathbf{j} - 190.56\mathbf{k}\}\text{ N}$$

$$= \{97.3\mathbf{i} + 129\mathbf{j} - 191\mathbf{k}\}\text{ N} \qquad \textbf{Ans.}$$

$$\mathbf{F}_{AC} = \mathbf{F}_{AC}\mathbf{u}_{AC} = 400\,(0.5534\mathbf{i} - 0.06917\mathbf{j} - 0.8301\mathbf{k})$$

$$= \{221.35\mathbf{i} - 27.67\mathbf{j} - 332.02\mathbf{k}\}\text{ N}$$

$$= \{221\mathbf{i} - 27.7\mathbf{j} - 332\mathbf{k}\}\text{ N} \qquad \textbf{Ans.}$$

Resultant Force

$$\mathbf{F}_R = \mathbf{F}_{AB} + \mathbf{F}_{AC}$$

$$= \{97.32\mathbf{i} + 129.30\mathbf{j} - 190.56\mathbf{k}\} + \{221.35\mathbf{i} - 27.67\mathbf{j} - 332.02\mathbf{k}\}$$

$$= \{318.67\mathbf{i} + 101.63\mathbf{j} - 522.58\,\mathbf{k}\}\text{ N}$$

The magnitude of $\mathbf{F}_R$ is

$$\mathbf{F}_R = \sqrt{(F_R)_x^2 + (F_R)_y^2 + (F_R)_z^2} = \sqrt{318.67^2 + 101.63^2 + (-522.58)^2}$$

$$= 620.46\text{ N} = 620\text{ N}$$

And its coordinate direction angles are

$$\cos\alpha = \frac{(F_R)_x}{F_R} = \frac{318.67}{620.46}; \qquad \alpha = 59.10° = 59.1° \qquad \textbf{Ans.}$$

$$\cos\beta = \frac{(F_R)_y}{F_R} = \frac{101.63}{620.46}; \qquad \beta = 80.57° = 80.6° \qquad \textbf{Ans.}$$

$$\cos\gamma = \frac{(F_R)_z}{F_R} = \frac{-522.58}{620.46}; \qquad \gamma = 147.38° = 147° \qquad \textbf{Ans.}$$

Ans:
$\mathbf{F}_{AB} = \{97.3\mathbf{i} - 129\mathbf{j} - 191\mathbf{k}\}$ N
$\mathbf{F}_{AC} = \{221\mathbf{i} - 27.7\mathbf{j} - 332\mathbf{k}\}$ N
$F_R = 620$ N
$\cos\alpha = 59.1°$
$\cos\beta = 80.6°$
$\cos\gamma = 147°$

Engineering Mechanics Statics 14th edition Hibbeler Solutions Manual

© 2016 Pearson Education, Inc., Upper Saddle River, NJ. All rights reserved. This material is protected under all copyright laws as they currently exist. No portion of this material may be reproduced, in any form or by any means, without permission in writing from the publisher.

2–93.

If $F_B = 560$ N and $F_C = 700$ N, determine the magnitude and coordinate direction angles of the resultant force acting on the flag pole.

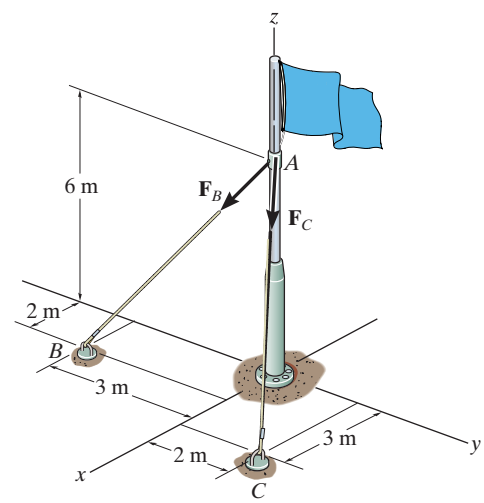

SOLUTION

Force Vectors: The unit vectors $\mathbf{u}_B$ and $\mathbf{u}_C$ of $\mathbf{F}_B$ and $\mathbf{F}_C$ must be determined first. From Fig. *a*

$$\mathbf{u}_B = \frac{\mathbf{r}_B}{r_B} = \frac{(2-0)\mathbf{i} + (-3-0)\mathbf{j} + (0-6)\mathbf{k}}{\sqrt{(2-0)^2 + (-3-0)^2 + (0-6)^2}} = \frac{2}{7}\mathbf{i} - \frac{3}{7}\mathbf{j} - \frac{6}{7}\mathbf{k}$$

$$\mathbf{u}_C = \frac{\mathbf{r}_C}{r_C} = \frac{(3-0)\mathbf{i} + (2-0)\mathbf{j} + (0-6)\mathbf{k}}{\sqrt{(3-0)^2 + (2-0)^2 + (0-6)^2}} = \frac{3}{7}\mathbf{i} + \frac{2}{7}\mathbf{j} - \frac{6}{7}\mathbf{k}$$

Thus, the force vectors $\mathbf{F}_B$ and $\mathbf{F}_C$ are given by

$$\mathbf{F}_B = F_B\mathbf{u}_B = 560\left(\frac{2}{7}\mathbf{i} - \frac{3}{7}\mathbf{j} - \frac{6}{7}\mathbf{k}\right) = \{160\mathbf{i} - 240\mathbf{j} - 480\mathbf{k}\}\text{ N}$$

$$\mathbf{F}_C = F_C\mathbf{u}_C = 700\left(\frac{3}{7}\mathbf{i} + \frac{2}{7}\mathbf{j} - \frac{6}{7}\mathbf{k}\right) = \{300\mathbf{i} + 200\mathbf{j} - 600\mathbf{k}\}\text{ N}$$

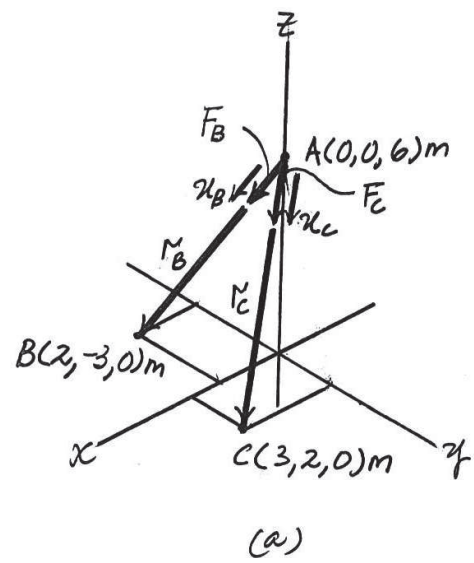

Resultant Force:

$$\mathbf{F}_R = \mathbf{F}_B + \mathbf{F}_C = (160\mathbf{i} - 240\mathbf{j} - 480\mathbf{k}) + (300\mathbf{i} + 200\mathbf{j} - 600\mathbf{k})$$

$$= \{460\mathbf{i} - 40\mathbf{j} + 1080\mathbf{k}\}\text{ N}$$

The magnitude of $\mathbf{F}_R$ is

$$F_R = \sqrt{(F_R)_x{}^2 + (F_R)_y{}^2 + (F_R)_z{}^2}$$

$$= \sqrt{(460)^2 + (-40)^2 + (-1080)^2} = 1174.56\text{ N} = 1.17\text{ kN} \qquad \textbf{Ans.}$$

The coordinate direction angles of $\mathbf{F}_R$ are

$$\alpha = \cos^{-1}\left[\frac{(F_R)_x}{F_R}\right] = \cos^{-1}\left(\frac{460}{1174.56}\right) = 66.9° \qquad \textbf{Ans.}$$

$$\beta = \cos^{-1}\left[\frac{(F_R)_y}{F_R}\right] = \cos^{-1}\left(\frac{-40}{1174.56}\right) = 92.0° \qquad \textbf{Ans.}$$

$$\gamma = \cos^{-1}\left[\frac{(F_R)_z}{F_R}\right] = \cos^{-1}\left(\frac{-1080}{1174.56}\right) = 157° \qquad \textbf{Ans.}$$

Ans:
$F_R = 1.17$ kN
$\alpha = 66.9°$
$\beta = 92.0°$
$\gamma = 157°$

Engineering Mechanics Statics 14th edition Hibbeler Solutions Manual

© 2016 Pearson Education, Inc., Upper Saddle River, NJ. All rights reserved. This material is protected under all copyright laws as they currently exist. No portion of this material may be reproduced, in any form or by any means, without permission in writing from the publisher.

2–94.

If $F_B = 700$ N, and $F_C = 560$ N, determine the magnitude and coordinate direction angles of the resultant force acting on the flag pole.

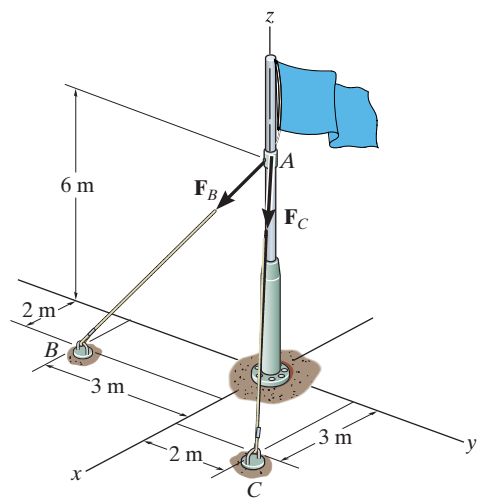

SOLUTION

Force Vectors: The unit vectors $\mathbf{u}_B$ and $\mathbf{u}_C$ of $\mathbf{F}_B$ and $\mathbf{F}_C$ must be determined first. From Fig. *a*

$$\mathbf{u}_B = \frac{\mathbf{r}_B}{r_B} = \frac{(2-0)\mathbf{i} + (-3-0)\mathbf{j} + (0-6)\mathbf{k}}{\sqrt{(2-0)^2 + (-3-0)^2 + (0-6)^2}} = \frac{2}{7}\mathbf{i} - \frac{3}{7}\mathbf{j} - \frac{6}{7}\mathbf{k}$$

$$\mathbf{u}_C = \frac{\mathbf{r}_C}{r_C} = \frac{(3-0)\mathbf{i} + (2-0)\mathbf{j} + (0-6)\mathbf{k}}{\sqrt{(3-0)^2 + (2-0)^2 + (0-6)^2}} = \frac{3}{7}\mathbf{i} + \frac{2}{7}\mathbf{j} - \frac{6}{7}\mathbf{k}$$

Thus, the force vectors $\mathbf{F}_B$ and $\mathbf{F}_C$ are given by

$$\mathbf{F}_B = F_B\mathbf{u}_B = 700\left(\frac{2}{7}\mathbf{i} - \frac{3}{7}\mathbf{j} - \frac{6}{7}\mathbf{k}\right) = \{200\mathbf{i} - 300\mathbf{j} - 600\mathbf{k}\}\text{ N}$$

$$\mathbf{F}_C = F_C\mathbf{u}_C = 560\left(\frac{3}{7}\mathbf{i} + \frac{2}{7}\mathbf{j} - \frac{6}{7}\mathbf{k}\right) = \{240\mathbf{i} + 160\mathbf{j} - 480\mathbf{k}\}\text{ N}$$

Resultant Force:

$$\mathbf{F}_R = \mathbf{F}_B + \mathbf{F}_C = (200\mathbf{i} - 300\mathbf{j} - 600\mathbf{k}) + (240\mathbf{i} + 160\mathbf{j} - 480\mathbf{k})$$

$$= \{440\mathbf{i} - 140\mathbf{j} - 1080\mathbf{k}\}\text{ N}$$

The magnitude of $\mathbf{F}_R$ is

$$F_R = \sqrt{(F_R)_x{}^2 + (F_R)_y{}^2 + (F_R)_z{}^2}$$

$$= \sqrt{(440)^2 + (-140)^2 + (-1080)^2} = 1174.56\text{ N} = 1.17\text{ kN} \qquad \textbf{Ans.}$$

The coordinate direction angles of $\mathbf{F}_R$ are

$$\alpha = \cos^{-1}\left[\frac{(F_R)_x}{F_R}\right] = \cos^{-1}\left(\frac{440}{1174.56}\right) = 68.0° \qquad \textbf{Ans.}$$

$$\beta = \cos^{-1}\left[\frac{(F_R)_y}{F_R}\right] = \cos^{-1}\left(\frac{-140}{1174.56}\right) = 96.8° \qquad \textbf{Ans.}$$

$$\gamma = \cos^{-1}\left[\frac{(F_R)_z}{F_R}\right] = \cos^{-1}\left(\frac{-1080}{1174.56}\right) = 157° \qquad \textbf{Ans.}$$

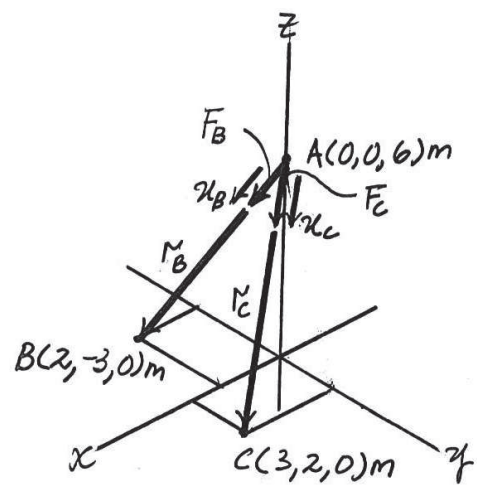

(a)

Ans:
$F_R = 1.17$ kN
$\alpha = 68.0°$
$\beta = 96.8°$
$\gamma = 157°$

Engineering Mechanics Statics 14th edition Hibbeler Solutions Manual

© 2016 Pearson Education, Inc., Upper Saddle River, NJ. All rights reserved. This material is protected under all copyright laws as they currently exist. No portion of this material may be reproduced, in any form or by any means, without permission in writing from the publisher.

2–95.

The plate is suspended using the three cables which exert the forces shown. Express each force as a Cartesian vector.

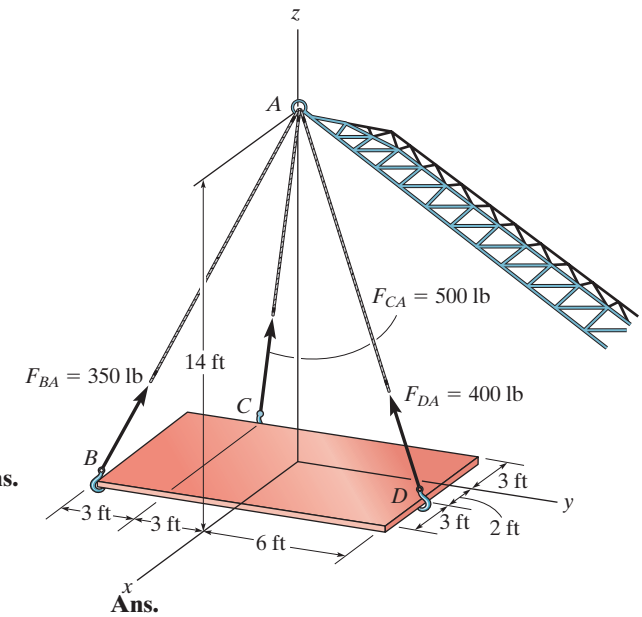

SOLUTION

$$\mathbf{F}_{BA} = 350\left(\frac{\mathbf{r}_{BA}}{r_{BA}}\right) = 350\left(-\frac{5}{16.031}\mathbf{i} + \frac{6}{16.031}\mathbf{j} + \frac{14}{16.031}\mathbf{k}\right)$$

$$= \{-109\,\mathbf{i} + 131\,\mathbf{j} + 306\,\mathbf{k}\}\text{ lb}$$ **Ans.**

$$\mathbf{F}_{CA} = 500\left(\frac{\mathbf{r}_{CA}}{r_{CA}}\right) = 500\left(\frac{3}{14.629}\mathbf{i} + \frac{3}{14.629}\mathbf{j} + \frac{14}{14.629}\mathbf{k}\right)$$

$$= \{103\,\mathbf{i} + 103\,\mathbf{j} + 479\,\mathbf{k}\}\text{ lb}$$ **Ans.**

$$\mathbf{F}_{DA} = 400\left(\frac{\mathbf{r}_{DA}}{r_{DA}}\right) = 400\left(-\frac{2}{15.362}\mathbf{i} - \frac{6}{15.362}\mathbf{j} + \frac{14}{15.362}\mathbf{k}\right)$$

$$= \{-52.1\,\mathbf{i} - 156\,\mathbf{j} + 365\,\mathbf{k}\}\text{ lb}$$ **Ans.**

Ans:
$\mathbf{F}_{BA} = \{-109\,\mathbf{i} + 131\,\mathbf{j} + 306\,\mathbf{k}\}$ lb
$\mathbf{F}_{CA} = \{103\,\mathbf{i} + 103\,\mathbf{j} + 479\,\mathbf{k}\}$ lb
$\mathbf{F}_{DA} = \{-52.1\,\mathbf{i} - 156\,\mathbf{j} + 365\,\mathbf{k}\}$ lb

Engineering Mechanics Statics 14th edition Hibbeler Solutions Manual

© 2016 Pearson Education, Inc., Upper Saddle River, NJ. All rights reserved. This material is protected under all copyright laws as they currently exist. No portion of this material may be reproduced, in any form or by any means, without permission in writing from the publisher.

***2–96.**

The three supporting cables exert the forces shown on the sign. Represent each force as a Cartesian vector.

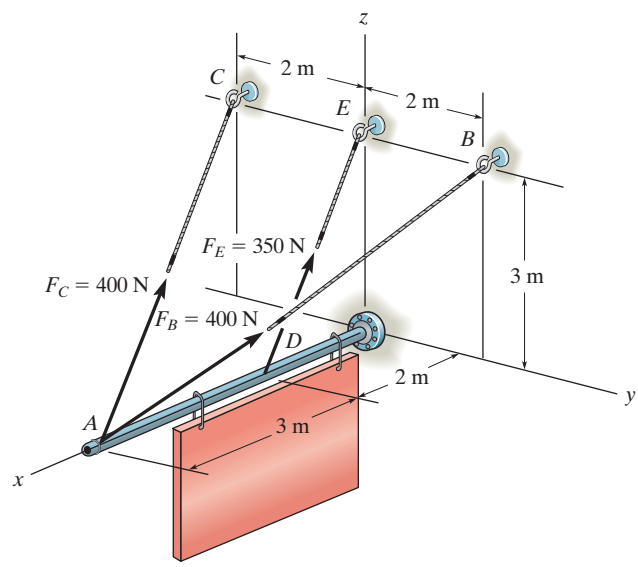

SOLUTION

$\mathbf{r}_C = (0 - 5)\mathbf{i} + (-2 - 0)\mathbf{j} + (3 - 0)\mathbf{k} = \{-5\mathbf{i} - 2\mathbf{j} + 3\mathbf{k}\}$ m

$r_C = \sqrt{(-5)^2 + (-2)^2 + 3^2} = \sqrt{38}$ m

$\mathbf{r}_B = (0 - 5)\mathbf{i} + (2 - 0)\mathbf{j} + (3 - 0)\mathbf{k} = \{-5\mathbf{i} + 2\mathbf{j} + 3\mathbf{k}\}$ m

$r_B = \sqrt{(-5)^2 + 2^2 + 3^2} = \sqrt{38}$ m

$\mathbf{r}_E = (0 - 2)\mathbf{i} + (0 - 0)\mathbf{j} + (3 - 0)\mathbf{k} = \{-2\mathbf{i} + 0\mathbf{j} + 3\mathbf{k}\}$ m

$r_E = \sqrt{(-2)^2 + 0^2 + 3^2} = \sqrt{13}$ m

$$\mathbf{F} = F_{\mathbf{u}} = F\left(\frac{\mathbf{r}}{r}\right)$$

$$\mathbf{F}_C = 400\left(\frac{-5\mathbf{i} - 2\mathbf{j} + 3\mathbf{k}}{\sqrt{38}}\right) = \{-324\mathbf{i} - 130\mathbf{j} + 195\mathbf{k}\}\text{ N} \qquad \textbf{Ans.}$$

$$\mathbf{F}_B = 400\left(\frac{-5\mathbf{i} + 2\mathbf{j} + 3\mathbf{k}}{\sqrt{38}}\right) = \{-324\mathbf{i} + 130\mathbf{j} + 195\mathbf{k}\}\text{ N} \qquad \textbf{Ans.}$$

$$\mathbf{F}_E = 350\left(\frac{-2\mathbf{i} + 0\mathbf{j} + 3\mathbf{k}}{\sqrt{13}}\right) = \{-194\mathbf{i} + 291\mathbf{k}\}\text{ N} \qquad \textbf{Ans.}$$

Ans:
$\mathbf{F}_C = \{-324\mathbf{i} - 130\mathbf{j} + 195\mathbf{k}\}$ N
$\mathbf{F}_B = \{-324\mathbf{i} + 130\mathbf{j} + 195\mathbf{k}\}$ N
$\mathbf{F}_E = \{-194\mathbf{i} + 291\mathbf{k}\}$ N

Engineering Mechanics Statics 14th edition Hibbeler Solutions Manual

© 2016 Pearson Education, Inc., Upper Saddle River, NJ. All rights reserved. This material is protected under all copyright laws as they currently exist. No portion of this material may be reproduced, in any form or by any means, without permission in writing from the publisher.

2–97.

Determine the magnitude and coordinate direction angles of the resultant force of the two forces acting on the sign at point A.

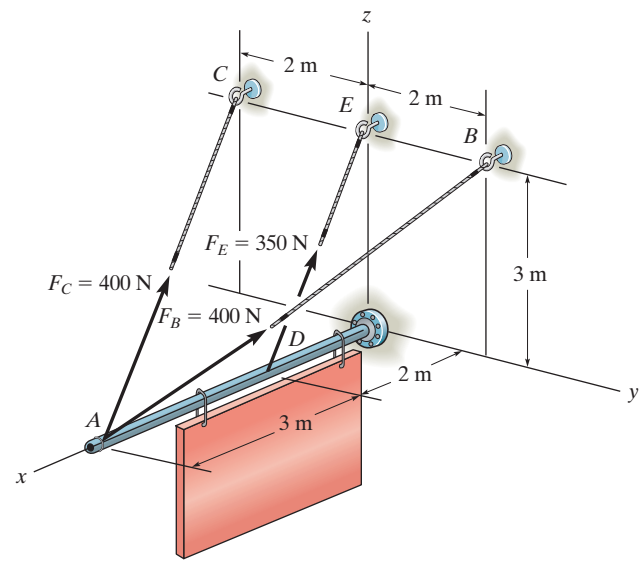

SOLUTION

$\mathbf{r}_C = (0 - 5)\mathbf{i} + (-2 - 0)\mathbf{j} + (3 - 0)\mathbf{k} = \{-5\mathbf{i} - 2\mathbf{j} + 3\mathbf{k}\}$

$r_C = \sqrt{(-5)^2 + (-2)^2 + (3)^2} = \sqrt{38}\text{ m}$

$\mathbf{F}_C = 400\left(\dfrac{\mathbf{r}_C}{r_C}\right) = 400\left(\dfrac{(-5\mathbf{i} - 2\mathbf{j} + 3\mathbf{k})}{\sqrt{38}}\right)$

$\mathbf{F}_C = (-324.4428\mathbf{i} - 129.777\mathbf{j} + 194.666\mathbf{k})$

$\mathbf{r}_B = (0 - 5)\mathbf{i} + (2 - 0)\mathbf{j} + (3 - 0)\mathbf{k} = \{-5\mathbf{i} + 2\mathbf{j} + 3\mathbf{k}\}$

$r_B = \sqrt{(-5)^2 + 2^2 + 3^2} = \sqrt{38}\text{ m}$

$\mathbf{F}_B = 400\left(\dfrac{\mathbf{r}_B}{r_B}\right) = 400\left(\dfrac{(-5\mathbf{i} + 2\mathbf{j} + 3\mathbf{k})}{\sqrt{38}}\right)$

$\mathbf{F}_B = (-324.443\mathbf{i} + 129.777\mathbf{j} + 194.666\mathbf{k})$

$\mathbf{F}_R = \mathbf{F}_C + \mathbf{F}_B = (-648.89\mathbf{i} + 389.33\mathbf{k})$

$F_R = \sqrt{(-648.89)^2 + (389.33)^2 + 0^2} = 756.7242$

$F_R = 757\text{ N}$ **Ans.**

$\alpha = \cos^{-1}\left(\dfrac{-648.89}{756.7242}\right) = 149.03 = 149°$ **Ans.**

$\beta = \cos^{-1}\left(\dfrac{0}{756.7242}\right) = 90.0°$ **Ans.**

$\gamma = \cos^{-1}\left(\dfrac{389.33}{756.7242}\right) = 59.036 = 59.0°$ **Ans.**

Ans:
$F_R = 757$ N
$\alpha = 149°$
$\beta = 90.0°$
$\gamma = 59.0°$

Engineering Mechanics Statics 14th edition Hibbeler Solutions Manual

© 2016 Pearson Education, Inc., Upper Saddle River, NJ. All rights reserved. This material is protected under all copyright laws as they currently exist. No portion of this material may be reproduced, in any form or by any means, without permission in writing from the publisher.

2–98.

The force **F** has a magnitude of 80 lb and acts at the midpoint C of the thin rod. Express the force as a Cartesian vector.

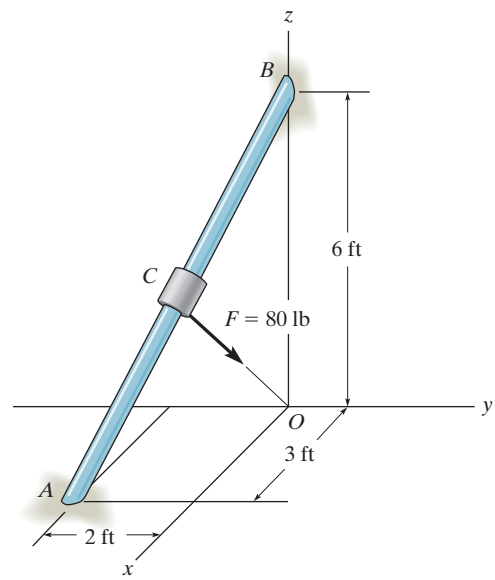

SOLUTION

$\mathbf{r}_{AB} = (-3\mathbf{i} + 2\mathbf{j} + 6\mathbf{k})$

$\mathbf{r}_{CB} = \frac{1}{2}\mathbf{r}_{AB} = (-1.5\mathbf{i} + 1\mathbf{j} + 3\mathbf{k})$

$\mathbf{r}_{CO} = \mathbf{r}_{BO} + \mathbf{r}_{CB}$

$= -6\mathbf{k} - 1.5\mathbf{i} + 1\mathbf{j} + 3\mathbf{k}$

$= -1.5\mathbf{i} + 1\mathbf{j} - 3\mathbf{k}$

$r_{CO} = 3.5$

$F = 80\left(\frac{\mathbf{r}_{CO}}{r_{CO}}\right) = \{-34.3\mathbf{i} + 22.9\mathbf{j} - 68.6\mathbf{k}\}$ lb **Ans.**

Ans:

$F = \{-34.3\mathbf{i} + 22.9\mathbf{j} - 68.6\mathbf{k}\}$ lb

Engineering Mechanics Statics 14th edition Hibbeler Solutions Manual

© 2016 Pearson Education, Inc., Upper Saddle River, NJ. All rights reserved. This material is protected under all copyright laws as they currently exist. No portion of this material may be reproduced, in any form or by any means, without permission in writing from the publisher.

2–99.

The load at A creates a force of 60 lb in wire AB. Express this force as a Cartesian vector acting on A and directed toward B as shown.

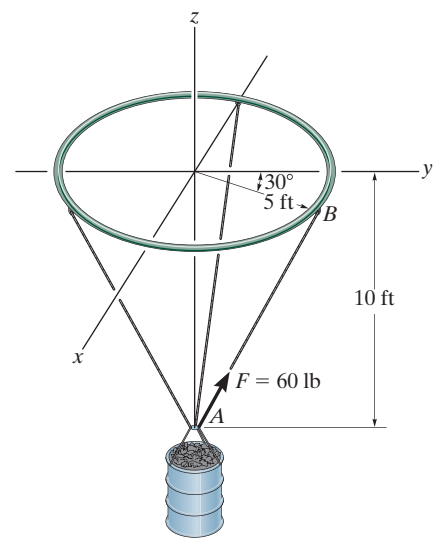

SOLUTION

Unit Vector: First determine the position vector $\mathbf{r}_{AB}$. The coordinates of point B are

$B\,(5 \sin 30°, 5 \cos 30°, 0)$ ft $= B\,(2.50, 4.330, 0)$ ft

Then

$$\mathbf{r}_{AB} = \{(2.50 - 0)\mathbf{i} + (4.330 - 0)\mathbf{j} + [0 - (-10)]\mathbf{k}\}\text{ ft}$$

$$= \{2.50\mathbf{i} + 4.330\mathbf{j} + 10\mathbf{k}\}\text{ ft}$$

$$r_{AB} = \sqrt{2.50^2 + 4.330^2 + 10.0^2} = 11.180\text{ ft}$$

$$\mathbf{u}_{AB} = \frac{\mathbf{r}_{AB}}{r_{AB}} = \frac{2.50\mathbf{i} + 4.330\mathbf{j} + 10\mathbf{k}}{11.180}$$

$$= 0.2236\mathbf{i} + 0.3873\mathbf{j} + 0.8944\mathbf{k}$$

Force Vector:

$$\mathbf{F} = F\mathbf{u}_{AB} = 60\,\{0.2236\mathbf{i} + 0.3873\mathbf{j} + 0.8944\mathbf{k}\}\text{ lb}$$

$$= \{13.4\mathbf{i} + 23.2\mathbf{j} + 53.7\mathbf{k}\}\text{ lb} \qquad \textbf{Ans.}$$

Ans:
$\mathbf{F} = \{13.4\mathbf{i} + 23.2\mathbf{j} + 53.7\mathbf{k}\}$ lb

Engineering Mechanics Statics 14th edition Hibbeler Solutions Manual

© 2016 Pearson Education, Inc., Upper Saddle River, NJ. All rights reserved. This material is protected under all copyright laws as they currently exist. No portion of this material may be reproduced, in any form or by any means, without permission in writing from the publisher.

***2–100.**

Determine the magnitude and coordinate direction angles of the resultant force acting at point A on the post.

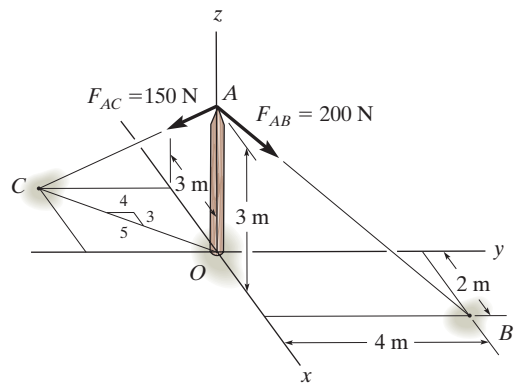

SOLUTION

Unit Vector. The coordinates for points A, B and C are $A(0, 0, 3)$ m, $B(2, 4, 0)$ m and $C(-3, -4, 0)$ m respectively

$$\mathbf{r}_{AB} = (2 - 0)\mathbf{i} + (4 - 0)\mathbf{j} + (0 - 3)\mathbf{k} = \{2\mathbf{i} + 4\mathbf{j} - 3\mathbf{k}\}\text{ m}$$

$$\mathbf{u}_{AB} = \frac{\mathbf{r}_{AB}}{\mathbf{r}_{AB}} = \frac{2\mathbf{i} + 4\mathbf{j} - 3\mathbf{k}}{\sqrt{2^2 + 4^2 + (-3)^2}} = \frac{2}{\sqrt{29}}\mathbf{i} + \frac{4}{\sqrt{29}}\mathbf{j} - \frac{3}{\sqrt{29}}\mathbf{k}$$

$$\mathbf{r}_{AC} = (-3 - 0)\mathbf{i} + (-4 - 0)\mathbf{j} + (0 - 3)\mathbf{k} = \{-3\mathbf{i} - 4\mathbf{j} - 3\mathbf{k}\}\text{ m}$$

$$\mathbf{u}_{AC} = \frac{\mathbf{r}_{AC}}{\mathbf{r}_{AC}} = \frac{-3\mathbf{i} - 4\mathbf{j} - 3\mathbf{k}}{\sqrt{(-3)^2 + (-4)^2 + (-3)^2}} = -\frac{3}{\sqrt{34}}\mathbf{i} - \frac{4}{\sqrt{34}}\mathbf{j} - \frac{3}{\sqrt{34}}\mathbf{k}$$

Force Vectors

$$\mathbf{F}_{AB} = \mathbf{F}_{AB}\,\mathbf{u}_{AB} = 200\left(\frac{2}{\sqrt{29}}\mathbf{i} + \frac{4}{\sqrt{29}}\mathbf{j} - \frac{3}{\sqrt{29}}\mathbf{k}\right)$$

$$= \{74.28\mathbf{i} + 148.56\mathbf{j} - 111.42\mathbf{k}\}\text{ N}$$

$$\mathbf{F}_{AC} = \mathbf{F}_{AC}\,\mathbf{u}_{AC} = 150\left(-\frac{3}{\sqrt{34}}\mathbf{i} - \frac{4}{\sqrt{34}}\mathbf{j} - \frac{3}{\sqrt{34}}\mathbf{k}\right)$$

$$= \{-77.17\mathbf{i} - 102.90\mathbf{j} - 77.17\mathbf{k}\}\text{ N}$$

Resultant Force

$$\mathbf{F}_R = \mathbf{F}_{AB} + \mathbf{F}_{AC}$$

$$= \{74.28\mathbf{i} + 148.56\mathbf{j} - 111.42\mathbf{k}\} + \{-77.17\mathbf{i} - 102.90\mathbf{j} - 77.17\mathbf{k}\}$$

$$= \{-2.896\mathbf{i} + 45.66\mathbf{j} - 188.59\,\mathbf{k}\}\text{ N}$$

The magnitude of the resultant force is

$$F_R = \sqrt{(F_R)_x^2 + (F_R)_y^2 + (F_R)_z^2} = \sqrt{(-2.896)^2 + 45.66^2 + (-188.59)^2}$$

$$= 194.06\text{ N} = 194\text{ N} \qquad \textbf{Ans.}$$

And its coordinate direction angles are

$$\cos\alpha = \frac{(F_R)_x}{F_R} = \frac{-2.896}{194.06}; \qquad \alpha = 90.86° = 90.9° \qquad \textbf{Ans.}$$

$$\cos\beta = \frac{(F_R)_y}{F_R} = \frac{45.66}{194.06}; \qquad \beta = 76.39° = 76.4° \qquad \textbf{Ans.}$$

$$\cos\gamma = \frac{(F_R)_z}{F_R} = \frac{-188.59}{194.06}; \qquad \gamma = 166.36° = 166° \qquad \textbf{Ans.}$$

Ans:
$F_R = 194$ N
$\cos\alpha = 90.9°$
$\cos\beta = 76.4°$
$\cos\gamma = 166°$

Engineering Mechanics Statics 14th edition Hibbeler Solutions Manual

© 2016 Pearson Education, Inc., Upper Saddle River, NJ. All rights reserved. This material is protected under all copyright laws as they currently exist. No portion of this material may be reproduced, in any form or by any means, without permission in writing from the publisher.

2–101.

The two mooring cables exert forces on the stern of a ship as shown. Represent each force as a Cartesian vector and determine the magnitude and coordinate direction angles of the resultant.

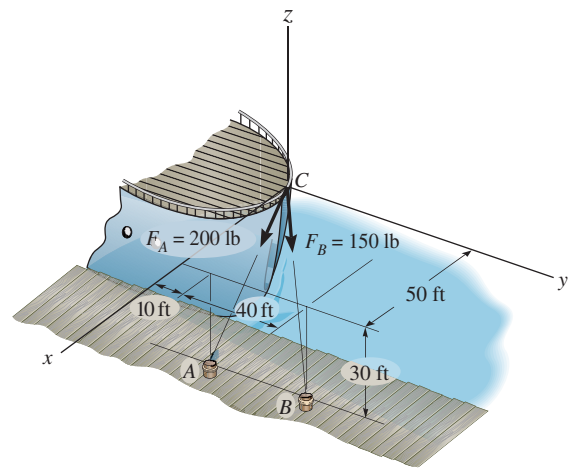

SOLUTION

Unit Vector:

$$\mathbf{r}_{CA} = \{(50 - 0)\mathbf{i} + (10 - 0)\mathbf{j} + (-30 - 0)\mathbf{k}\}\text{ ft} = \{50\mathbf{i} + 10\mathbf{j} - 30\mathbf{k}\}\text{ ft}$$

$$r_{CA} = \sqrt{50^2 + 10^2 + (-30)^2} = 59.16\text{ ft}$$

$$\mathbf{u}_{CA} = \frac{\mathbf{r}_{CA}}{r_{CA}} = \frac{50\mathbf{i} + 10\mathbf{j} - 30\mathbf{k}}{59.16} = 0.8452\mathbf{i} + 0.1690\mathbf{j} - 0.5071\mathbf{k}$$

$$\mathbf{r}_{CB} = \{(50 - 0)\mathbf{i} + (50 - 0)\mathbf{j} + (-30 - 0)\mathbf{k}\}\text{ ft} = \{50\mathbf{i} + 50\mathbf{j} - 30\mathbf{k}\}\text{ ft}$$

$$r_{CB} = \sqrt{50^2 + 50^2 + (-30)^2} = 76.81\text{ ft}$$

$$\mathbf{u}_{CB} = \frac{\mathbf{r}_{CA}}{r_{CA}} = \frac{50\mathbf{i} + 50\mathbf{j} - 30\mathbf{k}}{76.81} = 0.6509\mathbf{i} + 0.6509\mathbf{j} - 0.3906\mathbf{k}$$

Force Vector:

$$\mathbf{F}_A = F_A\mathbf{u}_{CA} = 200\{0.8452\mathbf{i} + 0.1690\mathbf{j} - 0.5071\mathbf{k}\}\text{ lb}$$

$$= \{169.03\mathbf{i} + 33.81\mathbf{j} - 101.42\mathbf{k}\}\text{ lb}$$

$$= \{169\mathbf{i} + 33.8\mathbf{j} - 101\mathbf{k}\}\text{ lb} \qquad \textbf{Ans.}$$

$$\mathbf{F}_B = F_B\mathbf{u}_{CB} = 150\{0.6509\mathbf{i} + 0.6509\mathbf{j} - 0.3906\mathbf{k}\}\text{ lb}$$

$$= \{97.64\mathbf{i} + 97.64\mathbf{j} - 58.59\mathbf{k}\}\text{ lb}$$

$$= \{97.6\mathbf{i} + 97.6\mathbf{j} - 58.6\mathbf{k}\}\text{ lb} \qquad \textbf{Ans.}$$

Resultant Force:

$$\mathbf{F}_R = \mathbf{F}_A + \mathbf{F}_B$$

$$= \{(169.03 + 97.64)\mathbf{i} + (33.81 + 97.64)\mathbf{j} + (-101.42 - 58.59)\mathbf{k}\}\text{ lb}$$

$$= \{266.67\mathbf{i} + 131.45\mathbf{j} - 160.00\mathbf{k}\}\text{ lb}$$

The magnitude of $\mathbf{F}_R$ is

$$F_R = \sqrt{266.67^2 + 131.45^2 + (-160.00)^2}$$

$$= 337.63\text{ lb} = 338\text{ lb} \qquad \textbf{Ans.}$$

The coordinate direction angles of $\mathbf{F}_R$ are

$$\cos\alpha = \frac{266.67}{337.63} \qquad \alpha = 37.8° \qquad \textbf{Ans.}$$

$$\cos\beta = \frac{131.45}{337.63} \qquad \beta = 67.1° \qquad \textbf{Ans.}$$

$$\cos\gamma = -\frac{160.00}{337.63} \qquad \gamma = 118° \qquad \textbf{Ans.}$$

Ans:
$\mathbf{F}_A = \{169\mathbf{i} + 33.8\mathbf{j} - 101\mathbf{k}\}$ lb
$\mathbf{F}_B = \{97.6\mathbf{i} + 97.6\mathbf{j} - 58.6\mathbf{k}\}$ lb
$F_R = 338$ lb
$\alpha = 37.8°$
$\beta = 67.1°$
$\gamma = 118°$

Engineering Mechanics Statics 14th edition Hibbeler Solutions Manual

© 2016 Pearson Education, Inc., Upper Saddle River, NJ. All rights reserved. This material is protected under all copyright laws as they currently exist. No portion of this material may be reproduced, in any form or by any means, without permission in writing from the publisher.

2–102.

The engine of the lightweight plane is supported by struts that are connected to the space truss that makes up the structure of the plane. The anticipated loading in two of the struts is shown. Express each of these forces as a Cartesian vector.

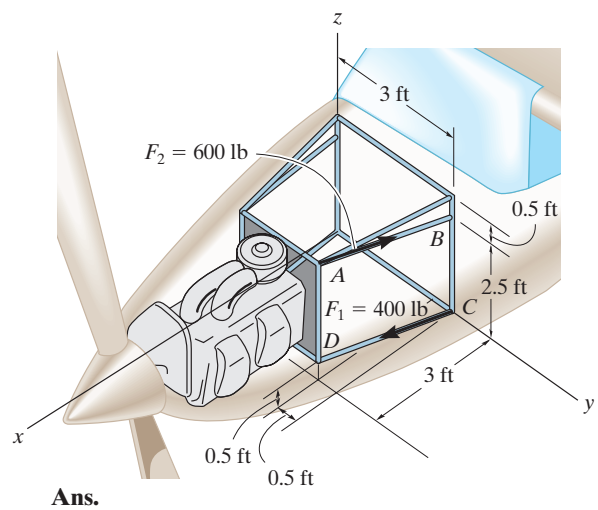

SOLUTION

$$\mathbf{F}_1 = 400\left(\frac{\mathbf{r}_{CD}}{r_{CD}}\right) = 400\left(\frac{3}{3.0822}\mathbf{i} - \frac{0.5}{3.0822}\mathbf{j} + \frac{0.5}{3.0822}\mathbf{k}\right)$$

$$= \{389\,\mathbf{i} - 64.9\,\mathbf{j} + 64.9\,\mathbf{k}\}\text{ lb}$$ **Ans.**

$$\mathbf{F}_2 = 600\left(\frac{\mathbf{r}_{AB}}{r_{AB}}\right) = 600\left(-\frac{3}{3.0822}\mathbf{i} - \frac{0.5}{3.0822}\mathbf{j} + \frac{0.5}{3.0822}\mathbf{k}\right)$$

$$= \{-584\,\mathbf{i} + 97.3\,\mathbf{j} - 97.3\mathbf{k}\}\text{ lb}$$ **Ans.**

Ans:
$\mathbf{F}_1 = \{389\mathbf{i} - 64.9\mathbf{j} + 64.9\mathbf{k}\}$ lb
$\mathbf{F}_2 = \{-584\mathbf{i} + 97.3\mathbf{j} - 97.3\mathbf{k}\}$ lb

Engineering Mechanics Statics 14th edition Hibbeler Solutions Manual

© 2016 Pearson Education, Inc., Upper Saddle River, NJ. All rights reserved. This material is protected under all copyright laws as they currently exist. No portion of this material may be reproduced, in any form or by any means, without permission in writing from the publisher.

2–103.

Determine the magnitude and coordinates on angles of the resultant force.

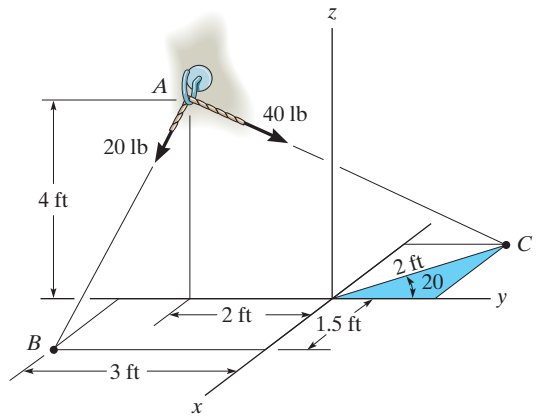

SOLUTION

$\mathbf{r}_{AC} = \{-2\sin 20°\mathbf{i} + (2 + 2\cos 20°)\mathbf{j} - 4\,\mathbf{k}\}$ ft

$\mathbf{u}_{AC} = \left(\dfrac{\mathbf{r}_{AC}}{r_{AC}}\right) = -0.1218\mathbf{i} + 0.6910\,\mathbf{j} - 0.7125\,\mathbf{k}$

$\mathbf{F}_{Ac} = 4\text{ lb}\mathbf{u}_{AC} = \{-4.874\,\mathbf{i} + 27.64\,\mathbf{j} - 28.50\,\mathbf{k}\}$ lb

$\mathbf{r}_{AB} = \{1.5\,\mathbf{i} - 1\,\mathbf{j} - 4\,\mathbf{k}\}$ ft

$\mathbf{u}_{AB} = \left(\dfrac{\mathbf{r}_{AB}}{r_{AB}}\right) = 0.3419\,\mathbf{i} + 0.2279\,\mathbf{j} - 0.9117\,\mathbf{k}$

$\mathbf{F}_{AB} = 20\text{ lb}\,\mathbf{u}_{AB} = \{6.838\,\mathbf{i} - 4.558\,\mathbf{j} - 18.23\,\mathbf{k}\}$ lb

$\mathbf{F}_R = \mathbf{F}_{AB} + \mathbf{F}_{AC}$

$\mathbf{F}_R = \{1.964\,\mathbf{i} + 23.08\,\mathbf{j} - 46.73\,\mathbf{k}\}$lb

$F_R = \sqrt{(1.964)^2 + (23.08)^2 + (-46.73)^2} = 52.16 = 52.2$ lb **Ans.**

$\alpha = \cos^{-1}\left(\dfrac{1.964}{52.16}\right) = 87.8°$ **Ans.**

$\beta = \cos^{-1}\left(\dfrac{23.08}{52.16}\right) = 63.7°$ **Ans.**

$\gamma = \cos^{-1}\left(\dfrac{-46.73}{52.16}\right) = 154°$ **Ans.**

Ans:
$F_R = 52.2$ lb
$\alpha = 87.8°$
$\beta = 63.7°$
$\gamma = 154°$

Engineering Mechanics Statics 14th edition Hibbeler Solutions Manual

© 2016 Pearson Education, Inc., Upper Saddle River, NJ. All rights reserved. This material is protected under all copyright laws as they currently exist. No portion of this material may be reproduced, in any form or by any means, without permission in writing from the publisher.

***2–104.**

If the force in each cable tied to the bin is 70 lb, determine the magnitude and coordinate direction angles of the resultant force.

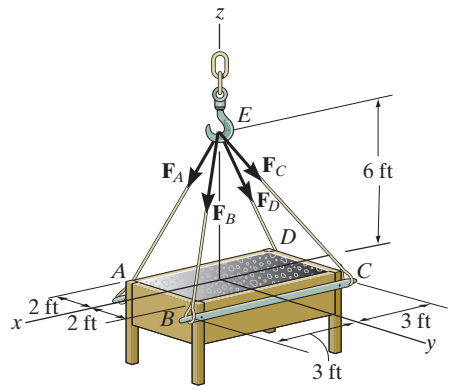

SOLUTION

Force Vectors: The unit vectors $\mathbf{u}_A$, $\mathbf{u}_B$, $\mathbf{u}_C$, and $\mathbf{u}_D$ of $\mathbf{F}_A$, $\mathbf{F}_B$, $\mathbf{F}_C$, and $\mathbf{F}_D$ must be determined first. From Fig. *a*,

$$\mathbf{u}_A = \frac{\mathbf{r}_A}{r_A} = \frac{(3-0)\mathbf{i} + (-2-0)\mathbf{j} + (0-6)\mathbf{k}}{\sqrt{(3-0)^2 + (-2-0)^2 + (0-6)^2}} = \frac{3}{7}\mathbf{i} - \frac{2}{7}\mathbf{j} - \frac{6}{7}\mathbf{k}$$

$$\mathbf{u}_B = \frac{\mathbf{r}_B}{r_B} = \frac{(3-0)\mathbf{i} + (2-0)\mathbf{j} + (0-6)\mathbf{k}}{\sqrt{(3-0)^2 + (2-0)^2 + (0-6)^2}} = \frac{3}{7}\mathbf{i} + \frac{2}{7}\mathbf{j} - \frac{6}{7}\mathbf{k}$$

$$\mathbf{u}_C = \frac{\mathbf{r}_C}{r_C} = \frac{(-3-0)\mathbf{i} + (2-0)\mathbf{j} + (0-6)\mathbf{k}}{\sqrt{(-3-0)^2 + (2-0)^2 + (0-6)^2}} = -\frac{3}{7}\mathbf{i} + \frac{2}{7}\mathbf{j} - \frac{6}{7}\mathbf{k}$$

$$\mathbf{u}_D = \frac{\mathbf{r}_D}{r_D} = \frac{(-3-0)\mathbf{i} + (-2-0)\mathbf{j} + (0-6)\mathbf{k}}{\sqrt{(-3-0)^2 + (-2-0)^2 + (0-6)^2}} = -\frac{3}{7}\mathbf{i} - \frac{2}{7}\mathbf{j} - \frac{6}{7}\mathbf{k}$$

Thus, the force vectors $\mathbf{F}_A$, $\mathbf{F}_B$, $\mathbf{F}_C$, and $\mathbf{F}_D$ are given by

$$\mathbf{F}_A = F_A\mathbf{u}_A = 70\left(\frac{3}{7}\mathbf{i} - \frac{2}{7}\mathbf{j} - \frac{6}{7}\mathbf{k}\right) = [30\mathbf{i} - 20\mathbf{j} - 60\mathbf{k}]\text{ lb}$$

$$\mathbf{F}_B = F_B\mathbf{u}_B = 70\left(\frac{3}{7}\mathbf{i} + \frac{2}{7}\mathbf{j} - \frac{6}{7}\mathbf{k}\right) = [30\mathbf{i} + 20\mathbf{j} - 60\mathbf{k}]\text{ lb}$$

$$\mathbf{F}_C = F_C\mathbf{u}_C = 70\left(-\frac{3}{7}\mathbf{i} + \frac{2}{7}\mathbf{j} - \frac{6}{7}\mathbf{k}\right) = [-30\mathbf{i} + 20\mathbf{j} - 60\mathbf{k}]\text{ lb}$$

$$\mathbf{F}_D = F_D\mathbf{u}_D = 70\left(-\frac{3}{7}\mathbf{i} - \frac{2}{7}\mathbf{j} - \frac{6}{7}\mathbf{k}\right) = [-30\mathbf{i} - 20\mathbf{j} - 60\mathbf{k}]\text{ lb}$$

Resultant Force:

$$\mathbf{F}_R = \mathbf{F}_A + \mathbf{F}_B + \mathbf{F}_C + \mathbf{F}_D = (30\mathbf{i} - 20\mathbf{j} - 60\mathbf{k}) + (30\mathbf{i} + 20\mathbf{j} - 60\mathbf{k}) + (-30\mathbf{i} + 20\mathbf{j} - 60\mathbf{k}) + (-30\mathbf{i} - 20\mathbf{j} - 60\mathbf{k})$$
$$= \{-240\mathbf{k}\}\text{ N}$$

The magnitude of $\mathbf{F}_R$ is

$$F_R = \sqrt{(F_R)_x^2 + (F_R)_y^2 + (F_R)_z^2}$$
$$= \sqrt{0 + 0 + (-240)^2} = 240\text{ lb} \qquad \textbf{Ans.}$$

The coordinate direction angles of $\mathbf{F}_R$ are

$$\alpha = \cos^{-1}\left[\frac{(F_R)_x}{F_R}\right] = \cos^{-1}\left(\frac{0}{240}\right) = 90^\circ \qquad \textbf{Ans.}$$

$$\beta = \cos^{-1}\left[\frac{(F_R)_y}{F_R}\right] = \cos^{-1}\left(\frac{0}{240}\right) = 90^\circ \qquad \textbf{Ans.}$$

$$\gamma = \cos^{-1}\left[\frac{(F_R)_z}{F_R}\right] = \cos^{-1}\left(\frac{-240}{240}\right) = 180^\circ \qquad \textbf{Ans.}$$

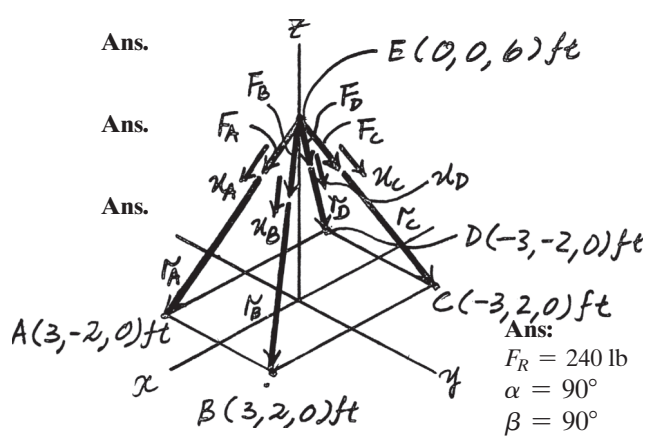

Ans:
$F_R = 240$ lb
$\alpha = 90^\circ$
$\beta = 90^\circ$
$\gamma = 180^\circ$

Engineering Mechanics Statics 14th edition Hibbeler Solutions Manual

© 2016 Pearson Education, Inc., Upper Saddle River, NJ. All rights reserved. This material is protected under all copyright laws as they currently exist. No portion of this material may be reproduced, in any form or by any means, without permission in writing from the publisher.

2–105.

If the resultant of the four forces is $\mathbf{F}_R = \{-360\mathbf{k}\}$ lb, determine the tension developed in each cable. Due to symmetry, the tension in the four cables is the same.

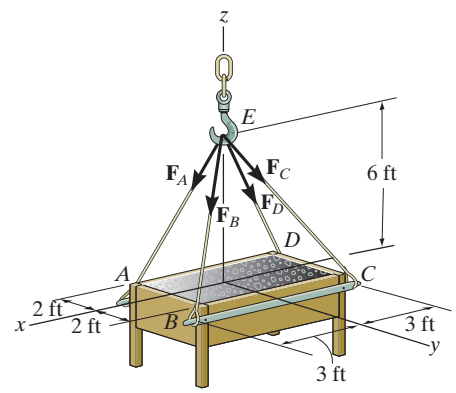

SOLUTION

Force Vectors: The unit vectors $\mathbf{u}_A$, $\mathbf{u}_B$, $\mathbf{u}_C$, and $\mathbf{u}_D$ of $\mathbf{F}_A$, $\mathbf{F}_B$, $\mathbf{F}_C$, and $\mathbf{F}_D$ must be determined first. From Fig. *a*,

$$\mathbf{u}_A = \frac{\mathbf{r}_A}{r_A} = \frac{(3-0)\mathbf{i} + (-2-0)\mathbf{j} + (0-6)\mathbf{k}}{\sqrt{(3-0)^2 + (-2-0)^2 + (0-6)^2}} = \frac{3}{7}\mathbf{i} - \frac{2}{7}\mathbf{j} - \frac{6}{7}\mathbf{k}$$

$$\mathbf{u}_B = \frac{\mathbf{r}_B}{r_B} = \frac{(3-0)\mathbf{i} + (2-0)\mathbf{j} + (0-6)\mathbf{k}}{\sqrt{(3-0)^2 + (2-0)^2 + (0-6)^2}} = \frac{3}{7}\mathbf{i} + \frac{2}{7}\mathbf{j} - \frac{6}{7}\mathbf{k}$$

$$\mathbf{u}_C = \frac{\mathbf{r}_C}{r_C} = \frac{(-3-0)\mathbf{i} + (2-0)\mathbf{j} + (0-6)\mathbf{k}}{\sqrt{(-3-0)^2 + (2-0)^2 + (0-6)^2}} = -\frac{3}{7}\mathbf{i} + \frac{2}{7}\mathbf{j} - \frac{6}{7}\mathbf{k}$$

$$\mathbf{u}_D = \frac{\mathbf{r}_D}{r_D} = \frac{(-3-0)\mathbf{i} + (-2-0)\mathbf{j} + (0-6)\mathbf{k}}{\sqrt{(-3-0)^2 + (-2-0)^2 + (0-6)^2}} = -\frac{3}{7}\mathbf{i} - \frac{2}{7}\mathbf{j} - \frac{6}{7}\mathbf{k}$$

Since the magnitudes of $\mathbf{F}_A$, $\mathbf{F}_B$, $\mathbf{F}_C$, and $\mathbf{F}_D$ are the same and denoted as F, the four vectors or forces can be written as

$$\mathbf{F}_A = F_A\mathbf{u}_A = F\left(\frac{3}{7}\mathbf{i} - \frac{2}{7}\mathbf{j} - \frac{6}{7}\mathbf{k}\right)$$

$$\mathbf{F}_B = F_B\mathbf{u}_B = F\left(\frac{3}{7}\mathbf{i} + \frac{2}{7}\mathbf{j} - \frac{6}{7}\mathbf{k}\right)$$

$$\mathbf{F}_C = F_C\mathbf{u}_C = F\left(-\frac{3}{7}\mathbf{i} + \frac{2}{7}\mathbf{j} - \frac{6}{7}\mathbf{k}\right)$$

$$\mathbf{F}_D = F_D\mathbf{u}_D = F\left(-\frac{3}{7}\mathbf{i} - \frac{2}{7}\mathbf{j} - \frac{6}{7}\mathbf{k}\right)$$

Resultant Force: The vector addition of $\mathbf{F}_A$, $\mathbf{F}_B$, $\mathbf{F}_C$, and $\mathbf{F}_D$ is equal to $\mathbf{F}_R$. Thus,

$$\mathbf{F}_R = \mathbf{F}_A + \mathbf{F}_B + \mathbf{F}_C + \mathbf{F}_D$$

$$\{-360\mathbf{k}\} = \left[F\left(\frac{3}{7}\mathbf{i} - \frac{2}{7}\mathbf{j} - \frac{6}{7}\mathbf{k}\right)\right] + \left[F\left(\frac{3}{7}\mathbf{i} + \frac{2}{7}\mathbf{j} - \frac{6}{7}\mathbf{k}\right)\right] + \left[F\left(-\frac{3}{7}\mathbf{i} + \frac{2}{7}\mathbf{j} - \frac{6}{7}\mathbf{k}\right) + \left[F\left(-\frac{3}{7}\mathbf{i} - \frac{2}{7}\mathbf{j} - \frac{6}{7}\mathbf{k}\right)\right]\right.$$

$$-360\mathbf{k} = -\frac{24}{7}\mathbf{k}$$

Thus,

$$360 = \frac{24}{7}F \qquad F = 105 \text{ lb}$$ **Ans.**

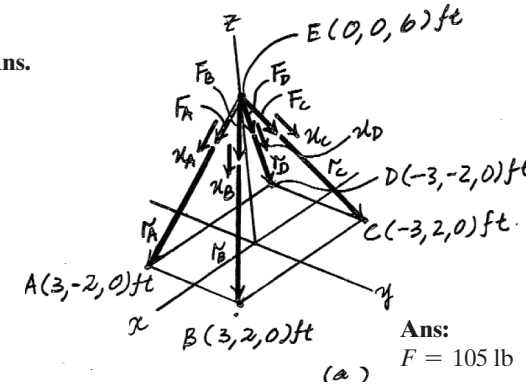

Ans:
$F = 105$ lb

Engineering Mechanics Statics 14th edition Hibbeler Solutions Manual

© 2016 Pearson Education, Inc., Upper Saddle River, NJ. All rights reserved. This material is protected under all copyright laws as they currently exist. No portion of this material may be reproduced, in any form or by any means, without permission in writing from the publisher.

2–106.

Express the force **F** in Cartesian vector form if it acts at the midpoint B of the rod.

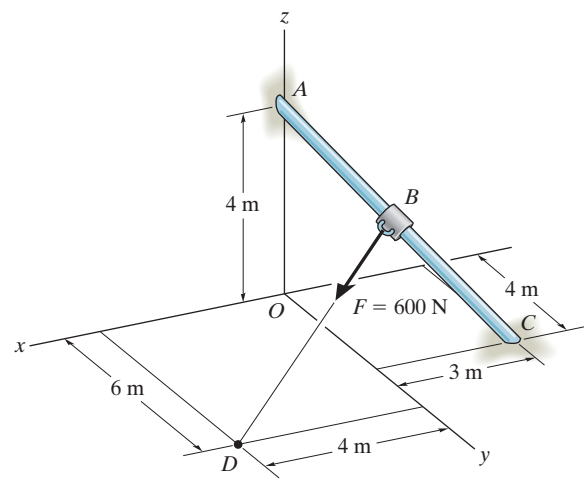

SOLUTION

$$\mathbf{r}_{AB} = \frac{\mathbf{r}_{AC}}{2} = \frac{-3\mathbf{i} + 4\mathbf{j} - 4\mathbf{k}}{2} = -1.5\mathbf{i} + 2\mathbf{j} - 2\mathbf{k}$$

$$\mathbf{r}_{AD} = \mathbf{r}_{AB} + \mathbf{r}_{BD}$$

$$\mathbf{r}_{BD} = \mathbf{r}_{AD} - \mathbf{r}_{AB}$$

$$= (4\mathbf{i} + 6\mathbf{j} - 4\mathbf{k}) - (-1.5\mathbf{i} + 2\mathbf{j} - 2\mathbf{k})$$

$$= \{5.5\mathbf{i} + 4\mathbf{j} - 2\mathbf{k}\}\ \text{m}$$

$$r_{BD} = \sqrt{(5.5)^2 + (4)^2 + (-2)^2} = 7.0887\ \text{m}$$

$$\mathbf{F} = 600\left(\frac{\mathbf{r}_{BD}}{r_{BD}}\right) = 465.528\mathbf{i} + 338.5659\mathbf{j} - 169.2829\mathbf{k}$$

$$\mathbf{F} = \{466\mathbf{i} + 339\mathbf{j} - 169\mathbf{k}\}\ \text{N}$$ **Ans.**

Ans:
$\mathbf{F} = \{466\mathbf{i} + 339\mathbf{j} - 169\mathbf{k}\}$ N

Engineering Mechanics Statics 14th edition Hibbeler Solutions Manual

© 2016 Pearson Education, Inc., Upper Saddle River, NJ. All rights reserved. This material is protected under all copyright laws as they currently exist. No portion of this material may be reproduced, in any form or by any means, without permission in writing from the publisher.

2–107.

Express force **F** in Cartesian vector form if point B is located 3 m along the rod end C.

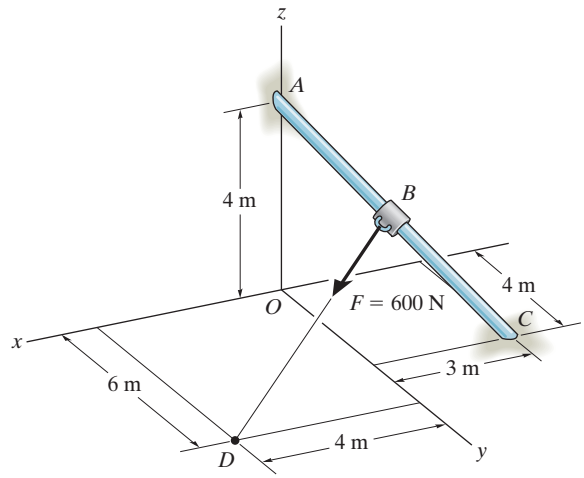

SOLUTION

$$\mathbf{r}_{CA} = 3\mathbf{i} - 4\mathbf{j} + 4\mathbf{k}$$

$$r_{CA} = 6.403124$$

$$\mathbf{r}_{CB} = \frac{3}{6.403124}(\mathbf{r}_{CA}) = 1.4056\mathbf{i} - 1.8741\mathbf{j} + 1.8741\mathbf{k}$$

$$\mathbf{r}_{OB} = \mathbf{r}_{OC} + \mathbf{r}_{CB}$$

$$= -3\mathbf{i} + 4\mathbf{j} + \mathbf{r}_{CB}$$

$$= -1.59444\mathbf{i} + 2.1259\mathbf{j} + 1.874085\mathbf{k}$$

$$\mathbf{r}_{OD} = \mathbf{r}_{OB} + \mathbf{r}_{BD}$$

$$\mathbf{r}_{BD} = \mathbf{r}_{OD} - \mathbf{r}_{OB} = (4\mathbf{i} + 6\mathbf{j}) - \mathbf{r}_{OB}$$

$$= 5.5944\mathbf{i} + 3.8741\mathbf{j} - 1.874085\mathbf{k}$$

$$r_{BD} = \sqrt{(5.5914)^2 + (3.8741)^2 + (-1.874085)^2} = 7.0582$$

$$\mathbf{F} = 600\left(\frac{\mathbf{r}_{BD}}{r_{BD}}\right) = 475.568\mathbf{i} + 329.326\mathbf{j} - 159.311\mathbf{k}$$

$$\mathbf{F} = \{476\mathbf{i} + 329\mathbf{j} - 159\mathbf{k}\}\ \text{N}$$ **Ans.**

Ans:
$\mathbf{F} = \{476\mathbf{i} + 329\mathbf{j} - 159\mathbf{k}\}$ N

Engineering Mechanics Statics 14th edition Hibbeler Solutions Manual

© 2016 Pearson Education, Inc., Upper Saddle River, NJ. All rights reserved. This material is protected under all copyright laws as they currently exist. No portion of this material may be reproduced, in any form or by any means, without permission in writing from the publisher.

***2–108.**

The chandelier is supported by three chains which are concurrent at point O. If the force in each chain has a magnitude of 60 lb, express each force as a Cartesian vector and determine the magnitude and coordinate direction angles of the resultant force.

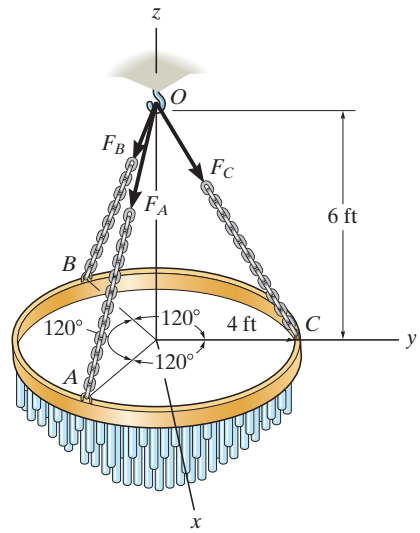

SOLUTION

$$\mathbf{F}_A = 60\frac{(4\cos 30°\,\mathbf{i} - 4\sin 30°\,\mathbf{j} - 6\,\mathbf{k})}{\sqrt{(4\cos 30°)^2 + (-4\sin 30°)^2 + (-6)^2}}$$

$$= \{28.8\,\mathbf{i} - 16.6\,\mathbf{j} - 49.9\,\mathbf{k}\}\text{ lb} \qquad \textbf{Ans.}$$

$$\mathbf{F}_B = 60\frac{(-4\cos 30°\,\mathbf{i} - 4\sin 30°\,\mathbf{j} - 6\mathbf{k})}{\sqrt{(-4\cos 30°)^2 + (-4\sin 30°)^2 + (-6)^2}}$$

$$= \{-28.8\,\mathbf{i} - 16.6\,\mathbf{j} - 49.9\,\mathbf{k}\}\text{ lb} \qquad \textbf{Ans.}$$

$$\mathbf{F}_C = 60\frac{(4\,\mathbf{j} - 6\,\mathbf{k})}{\sqrt{(4)^2 + (-6)^2}}$$

$$= \{33.3\,\mathbf{j} - 49.9\,\mathbf{k}\}\text{ lb} \qquad \textbf{Ans.}$$

$$\mathbf{F}_R = \mathbf{F}_A + \mathbf{F}_B + \mathbf{F}_C = \{-149.8\,\mathbf{k}\}\text{ lb}$$

$$F_R = 150\text{ lb} \qquad \textbf{Ans.}$$

$$\alpha = 90° \qquad \textbf{Ans.}$$

$$\beta = 90° \qquad \textbf{Ans.}$$

$$\gamma = 180° \qquad \textbf{Ans.}$$

Ans:
$\mathbf{F}_A = \{28.8\mathbf{i} - 16.6\mathbf{j} - 49.9\mathbf{k}\}$ lb
$\mathbf{F}_B = \{-28.8\mathbf{i} - 16.6\mathbf{j} - 49.9\mathbf{k}\}$ lb
$\mathbf{F}_C = \{33.3\mathbf{j} - 49.9\mathbf{k}\}$ lb
$F_R = 150$ lb
$\alpha = 90°$
$\beta = 90°$
$\gamma = 180°$

Engineering Mechanics Statics 14th edition Hibbeler Solutions Manual

© 2016 Pearson Education, Inc., Upper Saddle River, NJ. All rights reserved. This material is protected under all copyright laws as they currently exist. No portion of this material may be reproduced, in any form or by any means, without permission in writing from the publisher.

2–109.

The chandelier is supported by three chains which are concurrent at point O. If the resultant force at O has a magnitude of 130 lb and is directed along the negative z axis, determine the force in each chain.

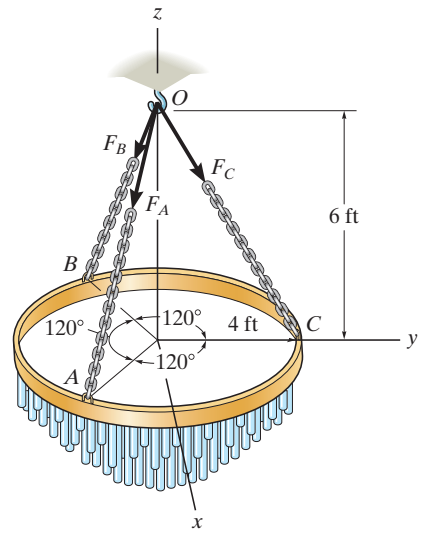

SOLUTION

$$\mathbf{F}_C = F\frac{(4\,\mathbf{j} - 6\,\mathbf{k})}{\sqrt{4^2 + (-6)^2}} = 0.5547\,F\mathbf{j} - 0.8321\,F\mathbf{k}$$

$$\mathbf{F}_A = \mathbf{F}_B = \mathbf{F}_C$$

$$F_{Rz} = \Sigma F_z; \qquad 130 = 3(0.8321F)$$

$$F = 52.1 \text{ lb}$$ **Ans.**

Ans:
$F = 52.1$ lb

Engineering Mechanics Statics 14th edition Hibbeler Solutions Manual

© 2016 Pearson Education, Inc., Upper Saddle River, NJ. All rights reserved. This material is protected under all copyright laws as they currently exist. No portion of this material may be reproduced, in any form or by any means, without permission in writing from the publisher.

2–110.

The window is held open by chain AB. Determine the length of the chain, and express the 50-lb force acting at A along the chain as a Cartesian vector and determine its coordinate direction angles.

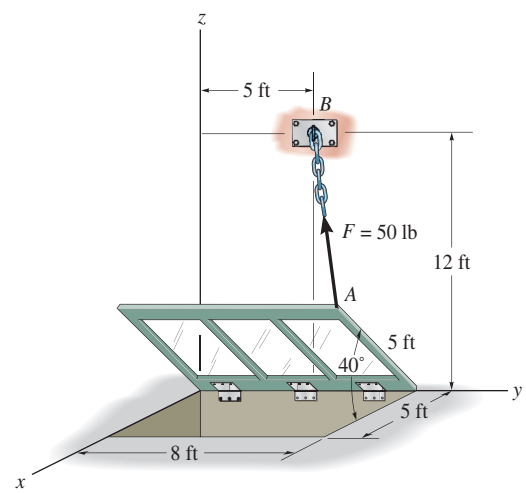

SOLUTION

Unit Vector: The coordinates of point A are

$$A(5\cos 40°, 8, 5\sin 40°)\text{ ft} = A(3.830, 8.00, 3.214)\text{ ft}$$

Then

$$\mathbf{r}_{AB} = \{(0 - 3.830)\mathbf{i} + (5 - 8.00)\mathbf{j} + (12 - 3.214)\mathbf{k}\}\text{ ft}$$

$$= \{-3.830\mathbf{i} - 3.00\mathbf{j} + 8.786\mathbf{k}\}\text{ ft}$$

$$r_{AB} = \sqrt{(-3.830)^2 + (-3.00)^2 + 8.786^2} = 10.043\text{ ft} = 10.0\text{ ft} \qquad \textbf{Ans.}$$

$$\mathbf{u}_{AB} = \frac{\mathbf{r}_{AB}}{r_{AB}} = \frac{-3.830\mathbf{i} - 3.00\mathbf{j} + 8.786\mathbf{k}}{10.043}$$

$$= -0.3814\mathbf{i} - 0.2987\mathbf{j} + 0.8748\mathbf{k}$$

Force Vector:

$$\mathbf{F} = F\mathbf{u}_{AB} = 50\{-0.3814\mathbf{i} - 0.2987\mathbf{j} + 0.8748\mathbf{k}\}\text{ lb}$$

$$= \{-19.1\mathbf{i} - 14.9\mathbf{j} + 43.7\mathbf{k}\}\text{ lb} \qquad \textbf{Ans.}$$

Coordinate Direction Angles: From the unit vector $\mathbf{u}_{AB}$ obtained above, we have

$$\cos\alpha = -0.3814 \qquad \alpha = 112° \qquad \textbf{Ans.}$$

$$\cos\beta = -0.2987 \qquad \beta = 107° \qquad \textbf{Ans.}$$

$$\cos\gamma = 0.8748 \qquad \gamma = 29.0° \qquad \textbf{Ans.}$$

Ans:
$r_{AB} = 10.0$ ft
$\mathbf{F} = \{-19.1\mathbf{i} - 14.9\mathbf{j} + 43.7\mathbf{k}\}$ lb
$\alpha = 112°$
$\beta = 107°$
$\gamma = 29.0°$

Engineering Mechanics Statics 14th edition Hibbeler Solutions Manual

© 2016 Pearson Education, Inc., Upper Saddle River, NJ. All rights reserved. This material is protected under all copyright laws as they currently exist. No portion of this material may be reproduced, in any form or by any means, without permission in writing from the publisher.

2–111.

The window is held open by cable AB. Determine the length of the cable and express the 30-N force acting at A along the cable as a Cartesian vector.

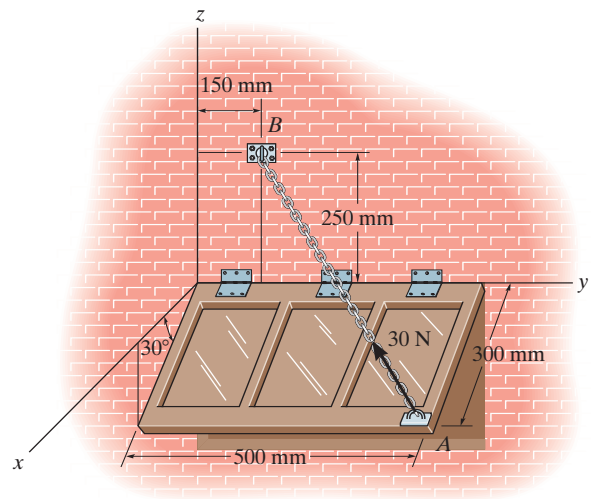

SOLUTION

$$\mathbf{r}_{AB} = (0-300\cos 30°)\mathbf{i} + (150 - 500)\mathbf{j} + (250 + 300\sin 30°)\mathbf{k}$$

$$= -259.81\,\mathbf{i} - 350\,\mathbf{j} + 400\,\mathbf{k}$$

$$r_{AB} = \sqrt{(-259.81)^2 + (-350)^2 + (400)^2} = 591.61$$

$$= 592 \text{ mm}$$ **Ans.**

$$\mathbf{F} = 30\left(\frac{\mathbf{r}_{AB}}{r_{AB}}\right) = \{-13.2\,\mathbf{i} - 17.7\,\mathbf{j} + 20.3\mathbf{k}\}\text{ N}$$ **Ans.**

Ans:
$r_{AB} = 592$ mm
$\mathbf{F} = \{-13.2\mathbf{i} - 17.7\mathbf{j} + 20.3\mathbf{k}\}$ N

Engineering Mechanics Statics 14th edition Hibbeler Solutions Manual

© 2016 Pearson Education, Inc., Upper Saddle River, NJ. All rights reserved. This material is protected under all copyright laws as they currently exist. No portion of this material may be reproduced, in any form or by any means, without permission in writing from the publisher.

***2–112.**

Given the three vectors **A**, **B**, and **D**, show that $\mathbf{A}\cdot(\mathbf{B}+\mathbf{D}) = (\mathbf{A}\cdot\mathbf{B}) + (\mathbf{A}\cdot\mathbf{D})$.

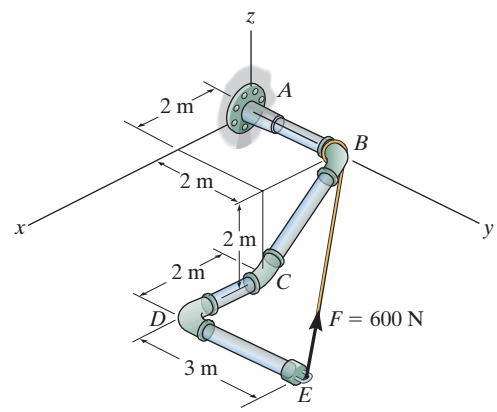

SOLUTION

Since the component of $(\mathbf{B}+\mathbf{D})$ is equal to the sum of the components of **B** and **D**, then

$$\mathbf{A}\cdot(\mathbf{B}+\mathbf{D}) = \mathbf{A}\cdot\mathbf{B} + \mathbf{A}\cdot\mathbf{D} \qquad \textbf{(QED)}$$

Also,

$$\begin{aligned}\mathbf{A}\cdot(\mathbf{B}+\mathbf{D}) &= (A_x\,\mathbf{i} + A_y\,\mathbf{j} + A_z\mathbf{k})\cdot[(B_x + D_x)\mathbf{i} + (B_y + D_y)\mathbf{j} + (B_z + D_z)\mathbf{k}]\\ &= A_x(B_x + D_x) + A_y(B_y + D_y) + A_z(B_z + D_z)\\ &= (A_xB_x + A_yB_y + A_zB_z) + (A_xD_x + A_yD_y + A_zD_z)\\ &= (\mathbf{A}\cdot\mathbf{B}) + (\mathbf{A}\cdot\mathbf{D}) \qquad \textbf{(QED)}\end{aligned}$$

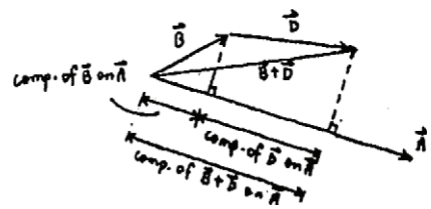

Engineering Mechanics Statics 14th edition Hibbeler Solutions Manual

© 2016 Pearson Education, Inc., Upper Saddle River, NJ. All rights reserved. This material is protected under all copyright laws as they currently exist. No portion of this material may be reproduced, in any form or by any means, without permission in writing from the publisher.

2–113.

Determine the magnitudes of the components of $F = 600$ N acting along and perpendicular to segment DE of the pipe assembly.

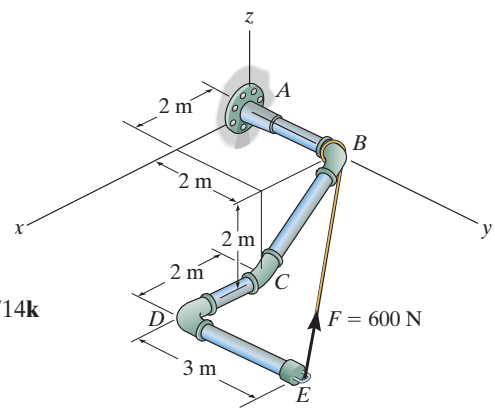

SOLUTION

Unit Vectors: The unit vectors $\mathbf{u}_{EB}$ and $\mathbf{u}_{ED}$ must be determined first. From Fig. *a*,

$$\mathbf{u}_{EB} = \frac{\mathbf{r}_{EB}}{r_{EB}} = \frac{(0-4)\mathbf{i} + (2-5)\mathbf{j} + [0-(-2)]\mathbf{k}}{\sqrt{(0-4)^2 + (2-5)^2 + [0-(-2)]^2}} = -0.7428\mathbf{i} - 0.5571\mathbf{j} + 0.3714\mathbf{k}$$

$$\mathbf{u}_{ED} = -\mathbf{j}$$

Thus, the force vector $\mathbf{F}$ is given by

$$\mathbf{F} = F\mathbf{u}_{EB} = 600\left(-0.7428\mathbf{i} - 0.5571\mathbf{j} + 0.3714\mathbf{k}\right) = [-445.66\mathbf{i} - 334.25\mathbf{j} + 222.83\mathbf{k}]\text{ N}$$

Vector Dot Product: The magnitude of the component of $\mathbf{F}$ *p*arallel to segment DE of the pipe assembly is

$$(F_{ED})_{\text{paral}} = \mathbf{F}\cdot\mathbf{u}_{ED} = \left(-445.66\mathbf{i} - 334.25\mathbf{j} + 222.83\mathbf{k}\right)\cdot\left(-\mathbf{j}\right)$$

$$= (-445.66)(0) + (-334.25)(-1) + (222.83)(0)$$

$$= 334.25 = 334\text{ N} \qquad \textbf{Ans.}$$

The component of $\mathbf{F}$ perpendicular to segment DE of the pipe assembly is

$$(F_{ED})_{\text{per}} = \sqrt{F^2 - (F_{ED})_{\text{paral}}^2} = \sqrt{600^2 - 334.25^2} = 498\text{ N} \qquad \textbf{Ans.}$$

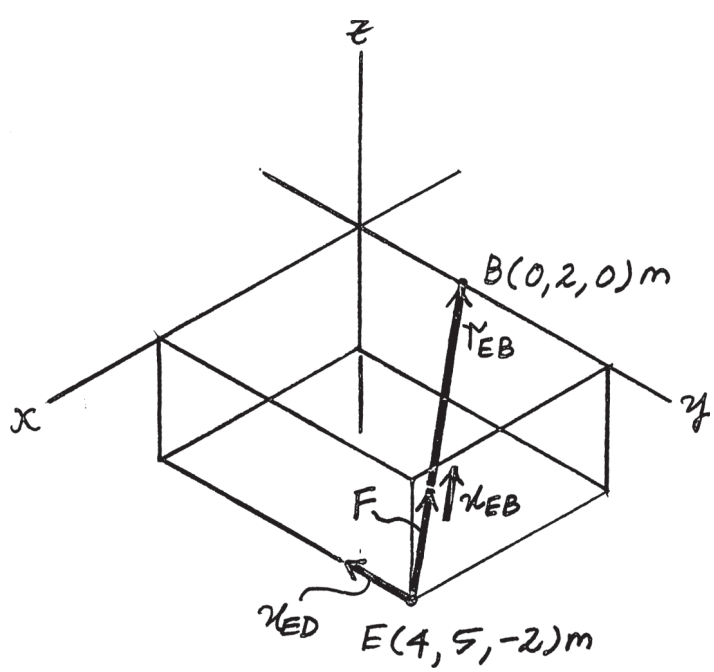

Ans:
$(F_{ED})_{\parallel} = 334$ N
$(F_{ED})_{\perp} = 498$ N

Engineering Mechanics Statics 14th edition Hibbeler Solutions Manual

© 2016 Pearson Education, Inc., Upper Saddle River, NJ. All rights reserved. This material is protected under all copyright laws as they currently exist. No portion of this material may be reproduced, in any form or by any means, without permission in writing from the publisher.

2–114.

Determine the angle θ between the two cables.

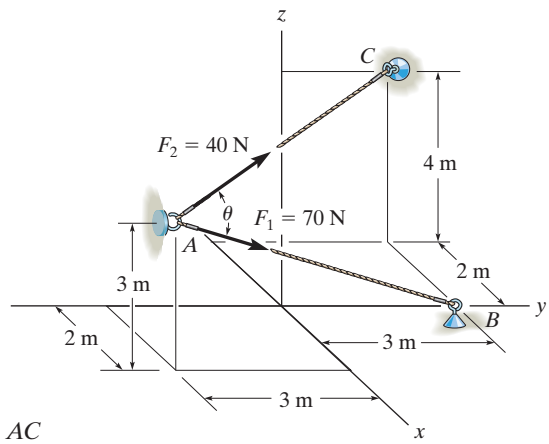

SOLUTION

Unit Vectors. Here, the coordinates of points A, B and C are $A(2, -3, 3)$ m, $B(0, 3, 0)$ and $C(-2, 3, 4)$ m respectively. Thus, the unit vectors along AB and AC are

$$\mathbf{u}_{AB} = \frac{(0-2)\mathbf{i} + [3-(-3)]\mathbf{j} + (0-3)\mathbf{k}}{\sqrt{(0-2)^2 + [3-(-3)]^2 + (0-3)^2}} = -\frac{2}{7}\mathbf{i} + \frac{6}{7}\mathbf{j} - \frac{3}{7}\mathbf{k}$$

$$\mathbf{u}_{AC} = \frac{(-2-2)\mathbf{i} + [3-(-3)]\mathbf{j} + (4-3)\mathbf{k}}{\sqrt{(-2-2)^2 + [3-(-3)]^2 + (4-3)^2}} = -\frac{4}{\sqrt{53}}\mathbf{i} + \frac{6}{\sqrt{53}}\mathbf{j} + \frac{1}{\sqrt{53}}\mathbf{k}$$

The Angle θ Between AB and AC.

$$\mathbf{u}_{AB}\cdot\mathbf{u}_{AC} = \left(-\frac{2}{7}\mathbf{i} + \frac{6}{7}\mathbf{j} - \frac{3}{7}\mathbf{k}\right)\cdot\left(-\frac{4}{\sqrt{53}}\mathbf{i} + \frac{6}{\sqrt{53}}\mathbf{j} + \frac{1}{\sqrt{53}}\mathbf{k}\right)$$

$$= \left(-\frac{2}{7}\right)\left(-\frac{4}{\sqrt{53}}\right) + \frac{6}{7}\left(\frac{6}{\sqrt{53}}\right) + \left(-\frac{3}{7}\right)\left(\frac{1}{\sqrt{53}}\right)$$

$$= \frac{41}{7\sqrt{53}}$$

Then

$$\theta = \cos^{-1}(\mathbf{u}_{AB}\cdot\mathbf{u}_{AC}) = \cos^{-1}\left(\frac{41}{7\sqrt{53}}\right) = 36.43° = 36.4° \qquad \textbf{Ans.}$$

Ans:
$\theta = 36.4°$

Engineering Mechanics Statics 14th edition Hibbeler Solutions Manual

© 2016 Pearson Education, Inc., Upper Saddle River, NJ. All rights reserved. This material is protected under all copyright laws as they currently exist. No portion of this material may be reproduced, in any form or by any means, without permission in writing from the publisher.

2–115.

Determine the magnitude of the projection of the force $\mathbf{F_1}$ along cable AC.

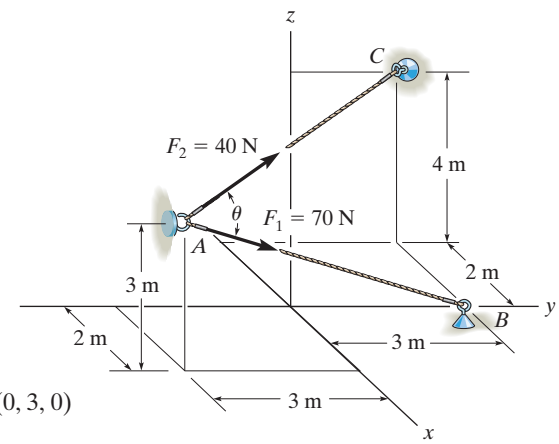

SOLUTION

Unit Vectors. Here, the coordinates of points A, B and C are $A(2, -3, 3)$m, $B(0, 3, 0)$ and $C(-2, 3, 4)$ m respectively. Thus, the unit vectors along AB and AC are

$$\mathbf{u}_{AB} = \frac{(0-2)\mathbf{i} + [3-(-3)]\mathbf{j} + (0-3)\mathbf{k}}{\sqrt{(0-2)^2 + [3-(-3)]^2 + (0-3)^2}} = -\frac{2}{7}\mathbf{i} + \frac{6}{7}\mathbf{j} - \frac{3}{7}\mathbf{k}$$

$$\mathbf{u}_{AC} = \frac{(-2-2)\mathbf{i} + [3-(-3)]\mathbf{j} + (4-3)\mathbf{k}}{\sqrt{(-2-2)^2 + [3-(-3)]^2 + (4-3)^2}} = -\frac{4}{\sqrt{53}}\mathbf{i} + \frac{6}{\sqrt{53}}\mathbf{j} + \frac{1}{\sqrt{53}}\mathbf{k}$$

Force Vector, For $\mathbf{F}_1$,

$$\mathbf{F}_1 = \mathbf{F}_1\mathbf{u}_{AB} = 70\left(-\frac{2}{7}\mathbf{i} + \frac{6}{7}\mathbf{j} - \frac{3}{7}\mathbf{k}\right) = \{-20\mathbf{i} + 60\mathbf{j} - 30\mathbf{k}\}\text{ N}$$

Projected Component of $\mathbf{F_1}$. Along AC, it is

$$(F_1)_{AC} = \mathbf{F}_1 \cdot \mathbf{u}_{AC} = (-20\mathbf{i} + 60\mathbf{j} - 30\mathbf{k}) \cdot \left(-\frac{4}{\sqrt{53}}\mathbf{i} + \frac{6}{\sqrt{53}}\mathbf{j} + \frac{1}{\sqrt{53}}\mathbf{k}\right)$$

$$= (-20)\left(-\frac{4}{\sqrt{53}}\right) + 60\left(\frac{6}{\sqrt{53}}\right) + (-30)\left(\frac{1}{\sqrt{53}}\right)$$

$$= 56.32\text{ N} = 56.3\text{ N} \qquad \textbf{Ans.}$$

The positive sign indicates that this component points in the same direction as $\mathbf{u}_{AC}$.

Ans:
$(F_1)_{AC} = 56.3$ N

Engineering Mechanics Statics 14th edition Hibbeler Solutions Manual

© 2016 Pearson Education, Inc., Upper Saddle River, NJ. All rights reserved. This material is protected under all copyright laws as they currently exist. No portion of this material may be reproduced, in any form or by any means, without permission in writing from the publisher.

***2–116.**

Determine the angle θ between the y axis of the pole and the wire AB.

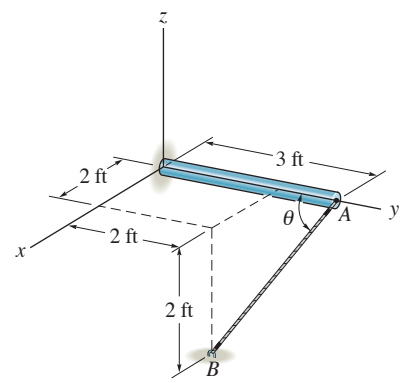

SOLUTION

Position Vector:

$$\mathbf{r}_{AC} = \{-3\mathbf{j}\}\text{ ft}$$

$$\mathbf{r}_{AB} = \{(2-0)\mathbf{i} + (2-3)\mathbf{j} + (-2-0)\mathbf{k}\}\text{ ft}$$

$$= \{2\mathbf{i} - 1\mathbf{j} - 2\mathbf{k}\}\text{ ft}$$

The magnitudes of the position vectors are

$$r_{AC} = 3.00\text{ ft} \qquad r_{AB} = \sqrt{2^2 + (-1)^2 + (-2)^2} = 3.00\text{ ft}$$

The Angles Between Two Vectors θ: The dot product of two vectors must be determined first.

$$\mathbf{r}_{AC}\cdot\mathbf{r}_{AB} = (-3\mathbf{j})\cdot(2\mathbf{i} - 1\mathbf{j} - 2\mathbf{k})$$

$$= 0(2) + (-3)(-1) + 0(-2)$$

$$= 3$$

Then,

$$\theta = \cos^{-1}\left(\frac{\mathbf{r}_{AO}\cdot\mathbf{r}_{AB}}{r_{AO}r_{AB}}\right) = \cos^{-1}\left[\frac{3}{3.00(3.00)}\right] = 70.5° \qquad \textbf{Ans.}$$

Ans:
$\theta = 70.5°$

Engineering Mechanics Statics 14th edition Hibbeler Solutions Manual

© 2016 Pearson Education, Inc., Upper Saddle River, NJ. All rights reserved. This material is protected under all copyright laws as they currently exist. No portion of this material may be reproduced, in any form or by any means, without permission in writing from the publisher.

2–117.

Determine the magnitudes of the projected components of the force $\mathbf{F} = [60\mathbf{i} + 12\mathbf{j} - 40\mathbf{k}]$ N along the cables AB and AC.

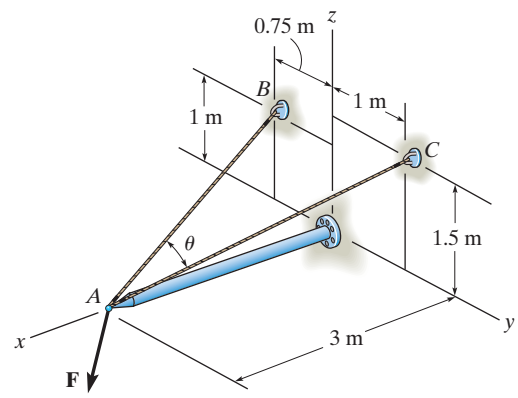

SOLUTION

$$\mathbf{F} = \{60\,\mathbf{i} + 12\,\mathbf{j} - 40\,\mathbf{k}\}\text{ N}$$

$$\mathbf{u}_{AB} = \frac{-3\,\mathbf{i} - 0.75\,\mathbf{j} + 1\,\mathbf{k}}{\sqrt{(-3)^2 + (-0.75)^2 + (1)^2}}$$

$$= -0.9231\,\mathbf{i} - 0.2308\,\mathbf{j} + 0.3077\,\mathbf{k}$$

$$\mathbf{u}_{AC} = \frac{-3\,\mathbf{i} + 1\,\mathbf{j} + 1.5\,\mathbf{k}}{\sqrt{(-3)^2 + (1)^2 + (1.5)^2}}$$

$$= -0.8571\,\mathbf{i} + 0.2857\,\mathbf{j} + 0.4286\,\mathbf{k}$$

$$\text{Proj } F_{AB} = \mathbf{F}\cdot\mathbf{u}_{AB} = (60)(-0.9231) + (12)(-0.2308) + (-40)(0.3077)$$

$$= -70.46\text{ N}$$

$$|\text{Proj } F_{AB}| = 70.5\text{ N}$$ **Ans.**

$$\text{Proj } F_{AC} = \mathbf{F}\cdot\mathbf{u}_{AC} = (60)(-0.8571) + (12)(0.2857) + (-40)(0.4286)$$

$$= -65.14\text{ N}$$

$$|\text{Proj } F_{AC}| = 65.1\text{ N}$$ **Ans.**

Ans:
$|\text{Proj } F_{AB}| = 70.5$ N
$|\text{Proj } F_{AC}| = 65.1$ N

Engineering Mechanics Statics 14th edition Hibbeler Solutions Manual

© 2016 Pearson Education, Inc., Upper Saddle River, NJ. All rights reserved. This material is protected under all copyright laws as they currently exist. No portion of this material may be reproduced, in any form or by any means, without permission in writing from the publisher.

2–118.

Determine the angle θ between cables AB and AC.

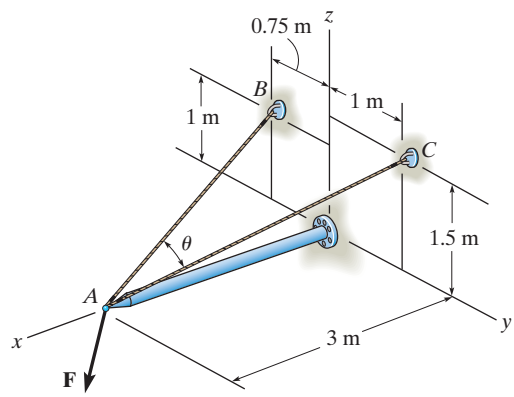

SOLUTION

$\mathbf{r}_{AB} = \{-3\,\mathbf{i} - 0.75\,\mathbf{j} + 1\,\mathbf{k}\}$ m

$r_{AB} = \sqrt{(-3)^2 + (-0.75)^2 + (1)^2} = 3.25$ m

$\mathbf{r}_{AC} = \{-3\,\mathbf{i} + 1\,\mathbf{j} + 1.5\,\mathbf{k}\}$ m

$r_{AC} = \sqrt{(-3)^2 + (1)^2 + (1.5)^2} = 3.50$ m

$\mathbf{r}_{AB} \cdot \mathbf{r}_{AC} = (-3)(-3) + (-0.75)(1) + (1)(1.5) = 9.75$

$$\theta = \cos^{-1}\left(\frac{\mathbf{r}_{AB} \cdot \mathbf{r}_{AC}}{r_{AB}\, r_{AC}}\right) = \cos^{-1}\left(\frac{9.75}{(3.25)(3.50)}\right)$$

$\theta = 31.0°$ **Ans.**

Ans:
$\theta = 31.0°$

Engineering Mechanics Statics 14th edition Hibbeler Solutions Manual

© 2016 Pearson Education, Inc., Upper Saddle River, NJ. All rights reserved. This material is protected under all copyright laws as they currently exist. No portion of this material may be reproduced, in any form or by any means, without permission in writing from the publisher.

2–119.

A force of $\mathbf{F} = \{-40\mathbf{k}\}$ lb acts at the end of the pipe. Determine the magnitudes of the components $\mathbf{F}_1$ and $\mathbf{F}_2$ which are directed along the pipe's axis and perpendicular to it.

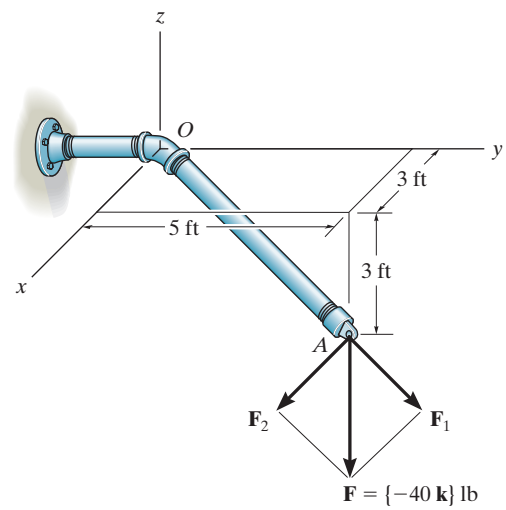

SOLUTION

$$\mathbf{u}_{OA} = \frac{3\,\mathbf{i} + 5\,\mathbf{j} - 3\mathbf{k}}{\sqrt{3^2 + 5^2 + (-3)^2}} = \frac{3\,\mathbf{i} + 5\,\mathbf{j} - 3\,\mathbf{k}}{\sqrt{43}}$$

$$F_1 = \mathbf{F} \cdot \mathbf{u}_{OA} = (-40\,\mathbf{k}) \cdot \left(\frac{3\mathbf{i} + 5\mathbf{j} - 3\mathbf{k}}{\sqrt{43}}\right)$$

$$= 18.3 \text{ lb}$$ **Ans.**

$$F_2 = \sqrt{F_2 - F_1^2}$$

$$F_2 = \sqrt{40^2 - 18.3^2} = 35.6 \text{ lb}$$ **Ans.**

Ans:
$F_1 = 18.3$ lb
$F_2 = 35.6$ lb

Engineering Mechanics Statics 14th edition Hibbeler Solutions Manual

© 2016 Pearson Education, Inc., Upper Saddle River, NJ. All rights reserved. This material is protected under all copyright laws as they currently exist. No portion of this material may be reproduced, in any form or by any means, without permission in writing from the publisher.

***2–120.**

Two cables exert forces on the pipe. Determine the magnitude of the projected component of $\mathbf{F}_1$ along the line of action of $\mathbf{F}_2$.

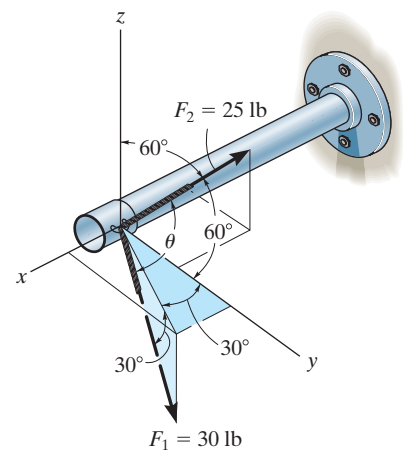

SOLUTION

Force Vector:

$$\mathbf{u}_{F_1} = \cos 30° \sin 30° \mathbf{i} + \cos 30° \cos 30° \mathbf{j} - \sin 30° \mathbf{k}$$

$$= 0.4330\mathbf{i} + 0.75\mathbf{j} - 0.5\mathbf{k}$$

$$\mathbf{F}_1 = F_R \mathbf{u}_{F_1} = 30(0.4330\mathbf{i} + 0.75\mathbf{j} - 0.5\mathbf{k}) \text{ lb}$$

$$= \{12.990\mathbf{i} + 22.5\mathbf{j} - 15.0\mathbf{k}\} \text{ lb}$$

Unit Vector: One can obtain the angle $\alpha = 135°$ for $\mathbf{F}_2$ using Eq. 2–8. $\cos^2\alpha + \cos^2\beta + \cos^2\gamma = 1$, with $\beta = 60°$ and $\gamma = 60°$. The unit vector along the line of action of $\mathbf{F}_2$ is

$$\mathbf{u}_{F_2} = \cos 135°\mathbf{i} + \cos 60°\mathbf{j} + \cos 60°\mathbf{k} = -0.7071\mathbf{i} + 0.5\mathbf{j} + 0.5\mathbf{k}$$

Projected Component of $\mathbf{F}_1$ Along the Line of Action of $\mathbf{F}_2$:

$$(F_1)_{F_2} = \mathbf{F}_1 \cdot \mathbf{u}_{F_2} = (12.990\mathbf{i} + 22.5\mathbf{j} - 15.0\mathbf{k}) \cdot (-0.7071\mathbf{i} + 0.5\mathbf{j} + 0.5\mathbf{k})$$

$$= (12.990)(-0.7071) + (22.5)(0.5) + (-15.0)(0.5)$$

$$= -5.44 \text{ lb}$$

Negative sign indicates that the projected component of $(F_1)_{F_2}$ acts in the opposite sense of direction to that of $\mathbf{u}_{F_2}$.

The magnitude is $(F_1)_{F_2} = 5.44$ lb **Ans.**

Ans:
The magnitude is $(F_1)_{F_2} = 5.44$ lb

Engineering Mechanics Statics 14th edition Hibbeler Solutions Manual

© 2016 Pearson Education, Inc., Upper Saddle River, NJ. All rights reserved. This material is protected under all copyright laws as they currently exist. No portion of this material may be reproduced, in any form or by any means, without permission in writing from the publisher.

2–121.

Determine the angle θ between the two cables attached to the pipe.

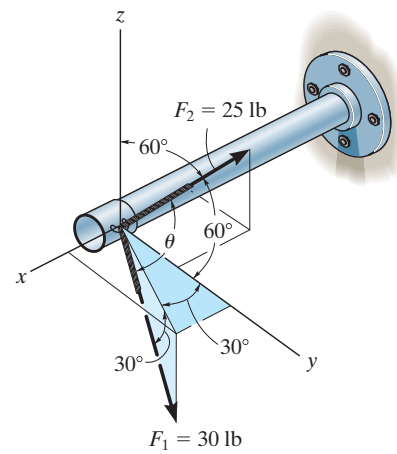

SOLUTION

Unit Vectors:

$$\mathbf{u}_{F_1} = \cos 30° \sin 30°\mathbf{i} + \cos 30° \cos 30°\mathbf{j} - \sin 30°\mathbf{k}$$

$$= 0.4330\mathbf{i} + 0.75\mathbf{j} - 0.5\mathbf{k}$$

$$\mathbf{u}_{F_2} = \cos 135°\mathbf{i} + \cos 60°\mathbf{j} + \cos 60°\mathbf{k}$$

$$= -0.7071\mathbf{i} + 0.5\mathbf{j} + 0.5\mathbf{k}$$

The Angles Between Two Vectors θ:

$$\mathbf{u}_{F_1} \cdot \mathbf{u}_{F_2} = (0.4330\mathbf{i} + 0.75\mathbf{j} - 0.5\mathbf{k}) \cdot (-0.7071\mathbf{i} + 0.5\mathbf{j} + 0.5\mathbf{k})$$

$$= 0.4330(-0.7071) + 0.75(0.5) + (-0.5)(0.5)$$

$$= -0.1812$$

Then,

$$\theta = \cos^{-1}\left(\mathbf{u}_{F_1} \cdot \mathbf{u}_{F_2}\right) = \cos^{-1}(-0.1812) = 100° \qquad \textbf{Ans.}$$

Ans:
$\theta = 100°$

Engineering Mechanics Statics 14th edition Hibbeler Solutions Manual

© 2016 Pearson Education, Inc., Upper Saddle River, NJ. All rights reserved. This material is protected under all copyright laws as they currently exist. No portion of this material may be reproduced, in any form or by any means, without permission in writing from the publisher.

2–122.

Determine the angle θ between the cables AB and AC.

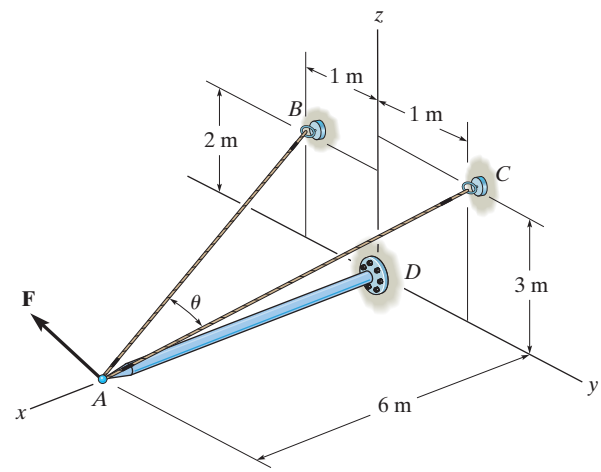

SOLUTION

Unit Vectors. Here, the coordinates of points A, B and C are $A(6, 0, 0)$ m, $B(0, -1, 2)$ m and $C(0, 1, 3)$ respectively. Thus, the unit vectors along AB and AC are

$$\mathbf{u}_{AB} = \frac{(0-6)\mathbf{i} + (-1-0)\mathbf{j} + (2-0)\mathbf{k}}{\sqrt{(0-6)^2 + (-1-0)^2 + (2-0)^2}} = -\frac{6}{\sqrt{41}}\mathbf{i} - \frac{1}{\sqrt{41}}\mathbf{j} + \frac{2}{\sqrt{41}}\mathbf{k}$$

$$\mathbf{u}_{AC} = \frac{(0-6)\mathbf{i} + (1-0)\mathbf{j} + (3-0)\mathbf{k}}{\sqrt{(0-6)^2 + (1-0)^2 + (3-0)^2}} = -\frac{6}{\sqrt{46}}\mathbf{i} + \frac{1}{\sqrt{46}}\mathbf{j} + \frac{3}{\sqrt{46}}\mathbf{k}$$

The Angle θ Between AB and AC.

$$\mathbf{u}_{AB} \cdot \mathbf{u}_{AC} = \left(-\frac{6}{\sqrt{41}}\mathbf{i} - \frac{1}{\sqrt{41}}\mathbf{j} + \frac{2}{\sqrt{41}}\mathbf{k}\right) \cdot \left(-\frac{6}{\sqrt{46}}\mathbf{i} + \frac{1}{\sqrt{46}}\mathbf{j} + \frac{3}{\sqrt{46}}\mathbf{k}\right)$$

$$= \left(-\frac{6}{\sqrt{41}}\right)\left(-\frac{6}{\sqrt{46}}\right) + \left(-\frac{1}{\sqrt{41}}\right)\left(\frac{1}{\sqrt{46}}\right) + \frac{2}{\sqrt{41}}\left(\frac{3}{\sqrt{46}}\right)$$

$$= \frac{41}{\sqrt{1886}}$$

Then

$$\theta = \cos^{-1}(U_{AB} \cdot U_{AC}) = \cos^{-1}\left(\frac{41}{\sqrt{1886}}\right) = 19.24998° = 19.2° \qquad \textbf{Ans.}$$

Ans:
$\theta = 19.2°$

Engineering Mechanics Statics 14th edition Hibbeler Solutions Manual

© 2016 Pearson Education, Inc., Upper Saddle River, NJ. All rights reserved. This material is protected under all copyright laws as they currently exist. No portion of this material may be reproduced, in any form or by any means, without permission in writing from the publisher.

2–123.

Determine the magnitude of the projected component of the force $\mathbf{F} = \{400\mathbf{i} - 200\mathbf{j} + 500\mathbf{k}\}$ N acting along the cable BA.

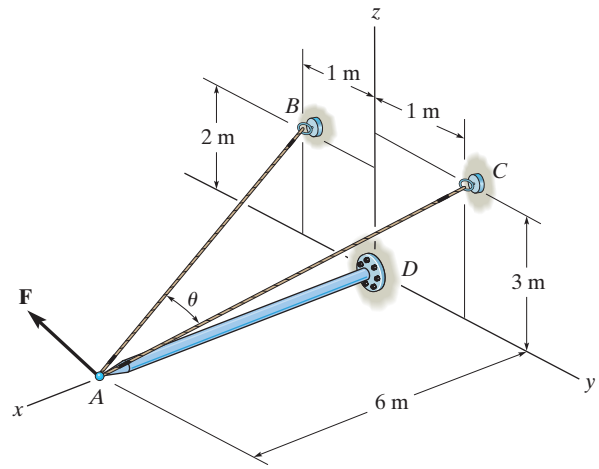

SOLUTION

Unit Vector. Here, the coordinates of points A and B are $A(6, 0, 0)$ m and $B(0, -1, 2)$ m respectively. Thus the unit vector along BA is

$$\mathbf{u}_{BA} = \frac{\mathbf{r}_{BA}}{\mathbf{r}_{BA}} = \frac{(6-0)\mathbf{i} + [0-(-1)]\mathbf{j} + (0-2)\mathbf{k}}{\sqrt{(6-0)^2 + [0-(-1)]^2 + (0-2)^2}} = \frac{6}{\sqrt{41}}\mathbf{i} + \frac{1}{\sqrt{41}}\mathbf{j} - \frac{2}{\sqrt{41}}\mathbf{k}$$

Projected component of F. Along BA, it is

$$F_{BA} = \mathbf{F}\cdot\mathbf{u}_{BA} = (400\mathbf{i} - 200\mathbf{j} + 500\mathbf{k})\cdot\left(\frac{6}{\sqrt{41}}\mathbf{i} + \frac{1}{\sqrt{41}}\mathbf{j} - \frac{2}{\sqrt{41}}\mathbf{k}\right)$$

$$= 400\left(\frac{6}{\sqrt{41}}\right) + (-200)\left(\frac{1}{\sqrt{41}}\right) + 500\left(-\frac{2}{\sqrt{41}}\right)$$

$$= 187.41 \text{ N} = 187 \text{ N} \qquad \textbf{Ans.}$$

The positive sign indicates that this component points in the same direction as $\mathbf{u}_{BA}$.

Ans:
$F_{BA} = 187$ N

Engineering Mechanics Statics 14th edition Hibbeler Solutions Manual

© 2016 Pearson Education, Inc., Upper Saddle River, NJ. All rights reserved. This material is protected under all copyright laws as they currently exist. No portion of this material may be reproduced, in any form or by any means, without permission in writing from the publisher.

***2–124.**

Determine the magnitude of the projected component of the force $\mathbf{F} = \{400\mathbf{i} - 200\mathbf{j} + 500\mathbf{k}\}$ N acting along the cable CA.

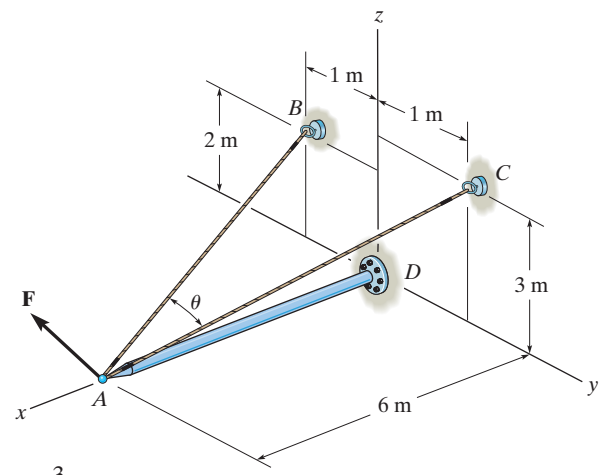

SOLUTION

Unit Vector. Here, the coordinates of points A and C are $A(6, 0, 0)$ m and $C(0, 1, 3)$ m respectively. Thus, the unit vector along CA is

$$\mathbf{u}_{CA} = \frac{\mathbf{r}_{CA}}{\mathbf{r}_{CA}} = \frac{(6-0)\mathbf{i} + (0-1)\mathbf{j} + (0-3)\mathbf{k}}{\sqrt{(6-0)^2 + (0-1)^2 + (0-3)^2}} = \frac{6}{\sqrt{46}}\mathbf{i} - \frac{1}{\sqrt{46}}\mathbf{j} - \frac{3}{\sqrt{46}}\mathbf{k}$$

Projected component of F. Along CA, it is

$$\mathbf{F}_{CA} = \mathbf{F} \cdot \mathbf{u}_{CA} = (400\mathbf{i} - 200\mathbf{j} + 500\mathbf{k}) \cdot \left(\frac{6}{\sqrt{46}}\mathbf{i} - \frac{1}{\sqrt{46}}\mathbf{j} - \frac{3}{\sqrt{46}}\mathbf{k}\right)$$

$$= 400\left(\frac{6}{\sqrt{46}}\right) + (-200)\left(-\frac{1}{\sqrt{46}}\right) + 500\left(-\frac{3}{\sqrt{46}}\right)$$

$$= 162.19 \text{ N} = 162 \text{ N} \qquad \textbf{Ans.}$$

The positive sign indicates that this component points in the same direction as $\mathbf{u}_{CA}$.

Ans:
$F_{CA} = 162$ N

Engineering Mechanics Statics 14th edition Hibbeler Solutions Manual

© 2016 Pearson Education, Inc., Upper Saddle River, NJ. All rights reserved. This material is protected under all copyright laws as they currently exist. No portion of this material may be reproduced, in any form or by any means, without permission in writing from the publisher.

2–125.

Determine the magnitude of the projection of force $F = 600$ N along the u axis.

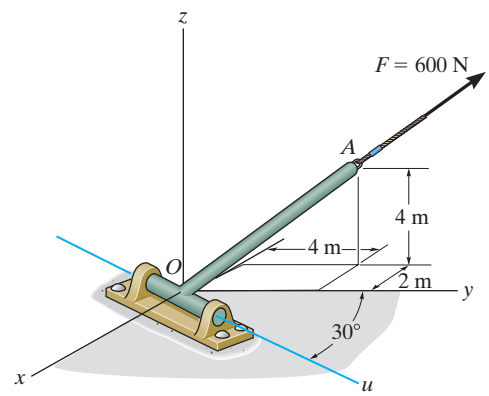

SOLUTION

Unit Vectors: The unit vectors $\mathbf{u}_{OA}$ and $\mathbf{u}_u$ must be determined first. From Fig. *a*,

$$\mathbf{u}_{OA} = \frac{\mathbf{r}_{OA}}{r_{OA}} = \frac{(-2-0)\mathbf{i} + (4-0)\mathbf{j} + (4-0)\mathbf{k}}{\sqrt{(-2-0)^2 + (4-0)^2 + (4-0)^2}} = -\frac{1}{3}\mathbf{i} + \frac{2}{3}\mathbf{j} + \frac{2}{3}\mathbf{k}$$

$$\mathbf{u}_u = \sin 30°\mathbf{i} + \cos 30°\mathbf{j}$$

Thus, the force vectors $\mathbf{F}$ is given by

$$\mathbf{F} = F\mathbf{u}_{OA} = 600\left(-\frac{1}{3}\mathbf{i} - \frac{2}{3}\mathbf{j} + \frac{2}{3}\mathbf{k}\right) = \{-200\mathbf{i} + 400\mathbf{j} + 400\mathbf{k}\}\text{ N}$$

Vector Dot Product: The magnitude of the projected component of $\mathbf{F}$ along the u axis is

$$\mathbf{F}_u = F \cdot \mathbf{u}_u = (-200\mathbf{i} + 400\mathbf{j} + 400\mathbf{k}) \cdot (\sin 30°\mathbf{i} + \cos 30°\mathbf{j})$$

$$= (-200)(\sin 30°) + 400(\cos 30°) + 400(0)$$

$$= 246\text{ N} \qquad \textbf{Ans.}$$

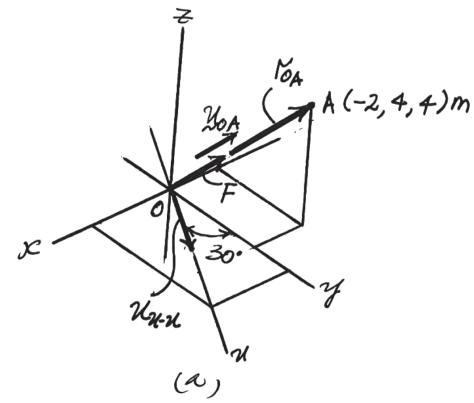

Ans:
$F_u = 246$ N

Engineering Mechanics Statics 14th edition Hibbeler Solutions Manual

© 2016 Pearson Education, Inc., Upper Saddle River, NJ. All rights reserved. This material is protected under all copyright laws as they currently exist. No portion of this material may be reproduced, in any form or by any means, without permission in writing from the publisher.

2–126.

Determine the magnitude of the projected component of the 100-lb force acting along the axis BC of the pipe.

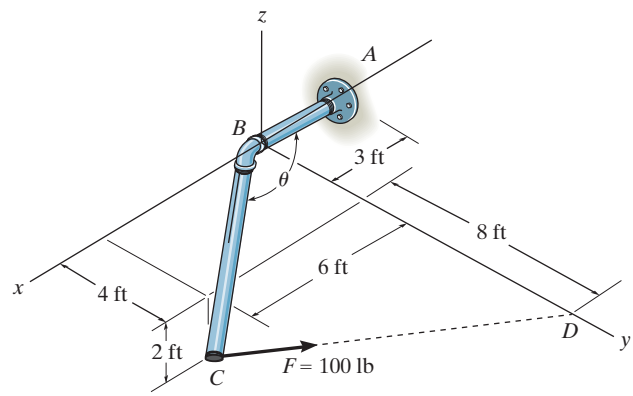

SOLUTION

$$\vec{\gamma}_{BC} = \{6\hat{i} + 4\hat{j} - 2\hat{k}\}\text{ ft}$$

$$\vec{F} = 100\frac{\{-6\hat{i} + 8\hat{j} + 2\hat{k}\}}{\sqrt{(-6)^2 + 8^2 + 2^2}}$$

$$= \{-58.83\hat{i} + 78.45\hat{j} + 19.61\hat{k}\}\text{ lb}$$

$$F_p = \vec{F}\cdot\vec{\mu}_{BC} = \vec{F}\cdot\frac{\vec{\gamma}_{BC}}{|\vec{\gamma}_{BC}|} = \frac{-78.45}{7.483} = -10.48$$

$$F_p = 10.5\text{ lb}$$ **Ans.**

Ans:
$F_p = 10.5$ lb

Engineering Mechanics Statics 14th edition Hibbeler Solutions Manual

© 2016 Pearson Education, Inc., Upper Saddle River, NJ. All rights reserved. This material is protected under all copyright laws as they currently exist. No portion of this material may be reproduced, in any form or by any means, without permission in writing from the publisher.

2–127.

Determine the angle θ between pipe segments BA and BC.

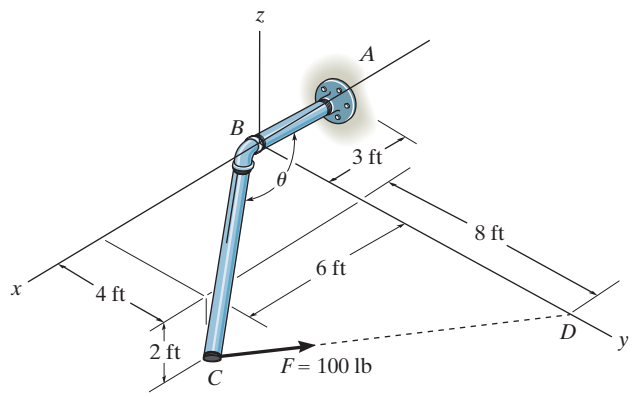

SOLUTION

$\vec{\gamma}_{BC} = \{6\hat{i} + 4\hat{j} - 2\hat{k}\}$ ft

$\vec{\gamma}_{BA} = \{-3\hat{i}\}$ ft

$$\theta = \cos^{-1}\left(\frac{\vec{\gamma}_{BC} \cdot \vec{\gamma}_{BA}}{|\vec{\gamma}_{BC}||\vec{\gamma}_{BA}|}\right) = \cos^{-1}\left(\frac{-18}{22.45}\right)$$

$\theta = 143°$ **Ans.**

Ans:
$\theta = 142°$

Engineering Mechanics Statics 14th edition Hibbeler Solutions Manual

© 2016 Pearson Education, Inc., Upper Saddle River, NJ. All rights reserved. This material is protected under all copyright laws as they currently exist. No portion of this material may be reproduced, in any form or by any means, without permission in writing from the publisher.

***2–128.**

Determine the angle θ between BA and BC.

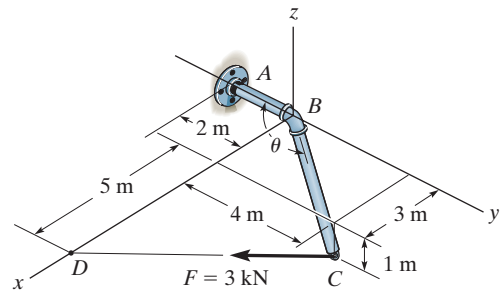

SOLUTION

Unit Vectors. Here, the coordinates of points A, B and C are $A(0, -2, 0)$ m, $B(0, 0, 0)$ m and $C(3, 4, -1)$ m respectively. Thus, the unit vectors along BA and BC are

$$\mathbf{u}_{BA} = -\mathbf{j} \qquad \mathbf{u}_{BE} = \frac{(3-0)\,\mathbf{i} + (4-0)\,\mathbf{j} + (-1-0)\,\mathbf{k}}{\sqrt{(3-0)^2 + (4-0)^2 + (-1-0)^2}} = \frac{3}{\sqrt{26}}\,\mathbf{i} + \frac{4}{\sqrt{26}}\,\mathbf{j} - \frac{1}{\sqrt{26}}\,\mathbf{k}$$

The Angle θ Between BA and BC.

$$\mathbf{u}_{BA}\,\mathbf{u}_{BC} = (-\mathbf{j}) \cdot \left(\frac{3}{\sqrt{26}}\,\mathbf{i} + \frac{4}{\sqrt{26}}\,\mathbf{j} - \frac{1}{\sqrt{26}}\,\mathbf{k}\right)$$

$$= (-1)\left(\frac{4}{\sqrt{26}}\right) = -\frac{4}{\sqrt{26}}$$

Then

$$\theta = \cos^{-1}(\mathbf{u}_{BA} \cdot \mathbf{u}_{BC}) = \cos^{-1}\left(-\frac{4}{\sqrt{26}}\right) = 141.67° = 142° \qquad \textbf{Ans.}$$

Ans:
$\theta = 142°$

Engineering Mechanics Statics 14th edition Hibbeler Solutions Manual

© 2016 Pearson Education, Inc., Upper Saddle River, NJ. All rights reserved. This material is protected under all copyright laws as they currently exist. No portion of this material may be reproduced, in any form or by any means, without permission in writing from the publisher.

2–129.

Determine the magnitude of the projected component of the 3 kN force acting along the axis BC of the pipe.

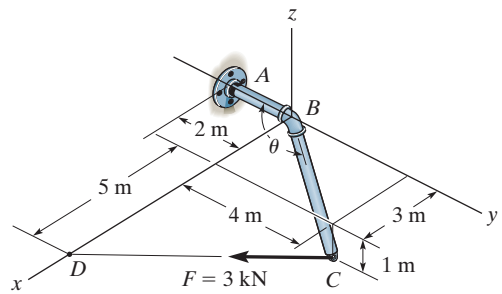

SOLUTION

Unit Vectors. Here, the coordinates of points B, C and D are $B\ (0, 0, 0)$ m, $C(3, 4, -1)$ m and $D(8, 0, 0)$. Thus the unit vectors along BC and CD are

$$\mathbf{u}_{BC} = \frac{(3-0)\,\mathbf{i} + (4-0)\,\mathbf{j} + (-1-0)\,\mathbf{k}}{\sqrt{(3-0)^2 + (4-0)^2 + (-1-0)^2}} = \frac{3}{\sqrt{26}}\,\mathbf{i} + \frac{4}{\sqrt{26}}\,\mathbf{j} - \frac{1}{\sqrt{26}}\,\mathbf{k}$$

$$\mathbf{u}_{CD} = \frac{(8-3)\,\mathbf{i} + (0-4)\,\mathbf{j} + [0-(-1)]\,\mathbf{k}}{\sqrt{(8-3)^2 + (0-4)^2 + [0-(-1)]^2}} = \frac{5}{\sqrt{42}}\,\mathbf{i} - \frac{4}{\sqrt{42}}\,\mathbf{j} + \frac{1}{\sqrt{42}}\,\mathbf{k}$$

Force Vector. For $\mathbf{F}$,

$$\mathbf{F} = F\mathbf{u}_{CD} = 3\left(\frac{5}{\sqrt{42}}\,\mathbf{i} - \frac{4}{\sqrt{42}}\,\mathbf{j} + \frac{1}{\sqrt{42}}\,\mathbf{k}\right)$$

$$= \left(\frac{15}{\sqrt{42}}\,\mathbf{i} - \frac{12}{\sqrt{42}}\,\mathbf{j} + \frac{3}{\sqrt{42}}\,\mathbf{k}\right)\text{kN}$$

Projected Component of F. Along BC, it is

$$\left|(F_{BC})\right| = \left|\mathbf{F}\cdot\mathbf{u}_{BC}\right| = \left|\left(\frac{15}{\sqrt{42}}\mathbf{i} - \frac{12}{\sqrt{42}}\mathbf{j} + \frac{3}{\sqrt{42}}\mathbf{k}\right)\cdot\left(\frac{3}{\sqrt{26}}\mathbf{i} + \frac{4}{\sqrt{26}}\mathbf{j} - \frac{1}{\sqrt{26}}\mathbf{k}\right)\right|$$

$$= \left|\left(\frac{15}{\sqrt{42}}\right)\left(\frac{3}{\sqrt{26}}\right) + \left(-\frac{12}{\sqrt{42}}\right)\left(\frac{4}{\sqrt{26}}\right) + \frac{3}{\sqrt{42}}\left(-\frac{1}{\sqrt{26}}\right)\right|$$

$$= \left|-\frac{6}{\sqrt{1092}}\right| = \left|-0.1816\text{ kN}\right| = 0.182\text{ kN} \qquad \textbf{Ans.}$$

The negative signs indicate that this component points in the direction opposite to that of $\mathbf{u}_{BC}$.

Ans:
0.182 kN

Engineering Mechanics Statics 14th edition Hibbeler Solutions Manual

© 2016 Pearson Education, Inc., Upper Saddle River, NJ. All rights reserved. This material is protected under all copyright laws as they currently exist. No portion of this material may be reproduced, in any form or by any means, without permission in writing from the publisher.

2–130.

Determine the angles θ and ϕ made between the axes OA of the flag pole and AB and AC, respectively, of each cable.

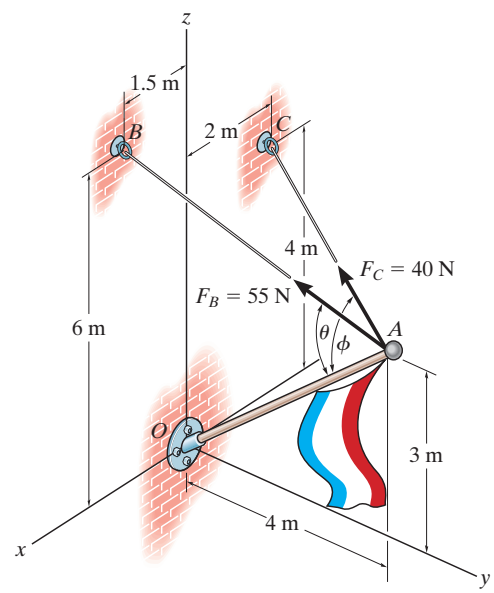

SOLUTION

$\mathbf{r}_{AC} = \{-2\mathbf{i} - 4\mathbf{j} + 1\mathbf{k}\}$ m ; $\quad r_{AC} = 4.58$ m

$\mathbf{r}_{AB} = \{1.5\mathbf{i} - 4\mathbf{j} + 3\mathbf{k}\}$ m; $\quad r_{AB} = 5.22$ m

$\mathbf{r}_{AO} = \{-4\mathbf{j} - 3\mathbf{k}\}$ m; $\quad r_{AO} = 5.00$ m

$\mathbf{r}_{AB} \cdot \mathbf{r}_{AO} = (1.5)(0) + (-4)(-4) + (3)(-3) = 7$

$$\theta = \cos^{-1}\left(\frac{\mathbf{r}_{AB} \cdot \mathbf{r}_{AO}}{r_{AB}\, r_{AO}}\right)$$

$$= \cos^{-1}\left(\frac{7}{5.22(5.00)}\right) = 74.4^\circ \qquad \textbf{Ans.}$$

$\mathbf{r}_{AC} \cdot \mathbf{r}_{AO} = (-2)(0) + (-4)(-4) + (1)(-3) = 13$

$$\phi = \cos^{-1}\left(\frac{\mathbf{r}_{AC} \cdot \mathbf{r}_{AO}}{r_{AC}\, r_{AO}}\right)$$

$$= \cos^{-1}\left(\frac{13}{4.58(5.00)}\right) = 55.4^\circ \qquad \textbf{Ans.}$$

Ans:
$\theta = 74.4^\circ$
$\phi = 55.4^\circ$

Engineering Mechanics Statics 14th edition Hibbeler Solutions Manual

© 2016 Pearson Education, Inc., Upper Saddle River, NJ. All rights reserved. This material is protected under all copyright laws as they currently exist. No portion of this material may be reproduced, in any form or by any means, without permission in writing from the publisher.

2–131.

Determine the magnitudes of the components of **F** acting along and perpendicular to segment BC of the pipe assembly.

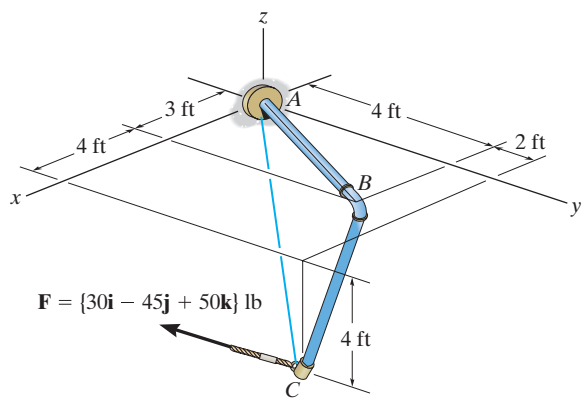

SOLUTION

Unit Vector: The unit vector $\mathbf{u}_{CB}$ must be determined first. From Fig. *a*

$$\mathbf{u}_{CB} = \frac{\mathbf{r}_{CB}}{r_{CB}} = \frac{(3-7)\mathbf{i} + (4-6)\mathbf{j} + [0-(-4)]\mathbf{k}}{\sqrt{(3-7)^2 + (4-6)^2 + [0-(-4)]^2}} = -\frac{2}{3}\mathbf{i} - \frac{1}{3}\mathbf{j} + \frac{2}{3}\mathbf{k}$$

Vector Dot Product: The magnitude of the projected component of **F** parallel to segment BC of the pipe assembly is

$$(F_{BC})_{\text{pa}} = \mathbf{F}\cdot\mathbf{u}_{CB} = (30\mathbf{i} - 45\mathbf{j} + 50\mathbf{k})\cdot\left(-\frac{2}{3}\mathbf{i} - \frac{1}{3}\mathbf{j} + \frac{2}{3}\mathbf{k}\right)$$

$$= (30)\left(-\frac{2}{3}\right) + (-45)\left(-\frac{1}{3}\right) + 50\left(\frac{2}{3}\right)$$

$$= 28.33 \text{ lb} = 28.3 \text{ lb} \qquad \textbf{Ans.}$$

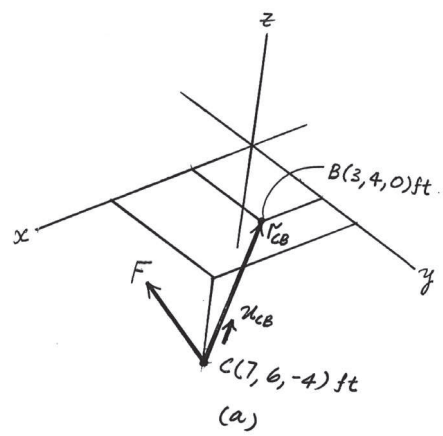

The magnitude of **F** is $F = \sqrt{30^2 + (-45)^2 + 50^2} = \sqrt{5425}$ lb. Thus, the magnitude of the component of **F** perpendicular to segment BC of the pipe assembly can be determined from

$$(F_{BC})_{\text{pr}} = \sqrt{F^2 - (F_{BC})_{\text{pa}}^2} = \sqrt{5425 - 28.33^2} = 68.0 \text{ lb} \qquad \textbf{Ans.}$$

Ans:
$(F_{BC})_{\parallel} = 28.3$ lb
$(F_{BC})_{\perp} = 68.0$ lb

Engineering Mechanics Statics 14th edition Hibbeler Solutions Manual

© 2016 Pearson Education, Inc., Upper Saddle River, NJ. All rights reserved. This material is protected under all copyright laws as they currently exist. No portion of this material may be reproduced, in any form or by any means, without permission in writing from the publisher.

***2–132.**

Determine the magnitude of the projected component of **F** along *AC*. Express this component as a Cartesian vector.

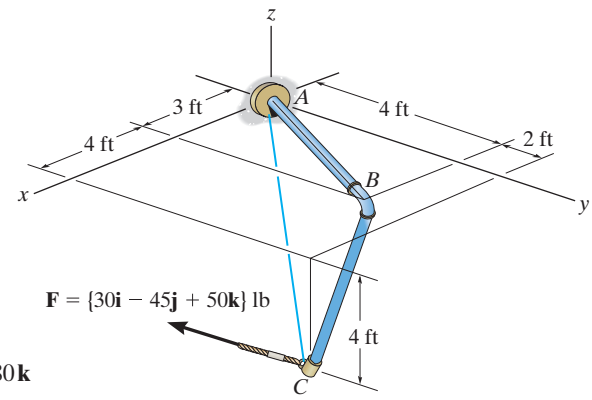

SOLUTION

Unit Vector: The unit vector $\mathbf{u}_{AC}$ must be determined first. From Fig. *a*

$$\mathbf{u}_{AC} = \frac{(7-0)\mathbf{i} + (6-0)\mathbf{j} + (-4-0)\mathbf{k}}{\sqrt{(7-0)^2 + (6-0)^2 + (-4-0)^2}} = 0.6965\mathbf{i} + 0.5970\mathbf{j} - 0.3980\mathbf{k}$$

Vector Dot Product: The magnitude of the projected component of **F** along line *AC* is

$$F_{AC} = \mathbf{F}\cdot\mathbf{u}_{AC} = (30\mathbf{i} - 45\mathbf{j} + 50\mathbf{k})\cdot(0.6965\mathbf{i} + 0.5970\mathbf{j} - 0.3980\mathbf{k})$$

$$= (30)(0.6965) + (-45)(0.5970) + 50(-0.3980)$$

$$= 25.87 \text{ lb} \qquad \textbf{Ans.}$$

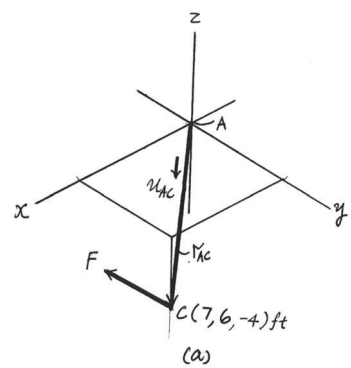

Thus, $\mathbf{F}_{AC}$ expressed in Cartesian vector form is

$$\mathbf{F}_{AC} = F_{AC}\mathbf{u}_{AC} = -25.87(0.6965\mathbf{i} + 0.5970\mathbf{j} - 0.3980\mathbf{k})$$

$$= \{-18.0\mathbf{i} - 15.4\mathbf{j} + 10.3\mathbf{k}\} \text{ lb} \qquad \textbf{Ans.}$$

Ans:
$F_{AC} = 25.87$ lb
$F_{AC} = \{-18.0\mathbf{i} - 15.4\mathbf{j} + 10.3\mathbf{k}\}$ lb

Engineering Mechanics Statics 14th edition Hibbeler Solutions Manual

© 2016 Pearson Education, Inc., Upper Saddle River, NJ. All rights reserved. This material is protected under all copyright laws as they currently exist. No portion of this material may be reproduced, in any form or by any means, without permission in writing from the publisher.

2–133.

Determine the angle θ between the pipe segments BA and BC.

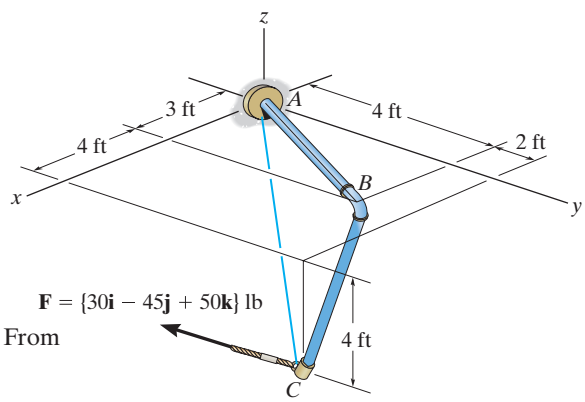

SOLUTION

Position Vectors: The position vectors $\mathbf{r}_{BA}$ and $\mathbf{r}_{BC}$ must be determined first. From Fig. *a*,

$$\mathbf{r}_{BA} = (0 - 3)\mathbf{i} + (0 - 4)\mathbf{j} + (0 - 0)\mathbf{k} = \{-3\mathbf{i} - 4\mathbf{j}\}\text{ ft}$$

$$\mathbf{r}_{BC} = (7 - 3)\mathbf{i} + (6 - 4)\mathbf{j} + (-4 - 0)\mathbf{k} = \{4\mathbf{i} + 2\mathbf{j} - 4\mathbf{k}\}\text{ ft}$$

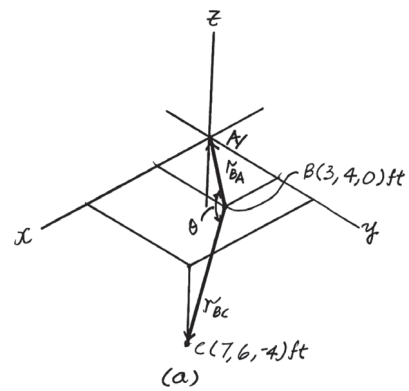

The magnitude of $\mathbf{r}_{BA}$ and $\mathbf{r}_{BC}$ are

$$\mathbf{r}_{BA} = \sqrt{(-3)^2 + (-4)^2} = 5\text{ ft}$$

$$\mathbf{r}_{BC} = \sqrt{4^2 + 2^2 + (-4)^2} = 6\text{ ft}$$

Vector Dot Product:

$$\mathbf{r}_{BA} \cdot \mathbf{r}_{BC} = (-3\mathbf{i} - 4\mathbf{j}) \cdot (4\mathbf{i} + 2\mathbf{j} - 4\mathbf{k})$$

$$= (-3)(4) + (-4)(2) + 0(-4)$$

$$= -20\text{ ft}^2$$

Thus,

$$\theta = \cos^{-1}\left(\frac{\mathbf{r}_{BA} \cdot \mathbf{r}_{BC}}{\mathbf{r}_{BA}\,\mathbf{r}_{BC}}\right) = \cos^{-1}\left[\frac{-20}{5(6)}\right] = 132^\circ \qquad \textbf{Ans.}$$

Ans:
$\theta = 132^\circ$

Engineering Mechanics Statics 14th edition Hibbeler Solutions Manual

© 2016 Pearson Education, Inc., Upper Saddle River, NJ. All rights reserved. This material is protected under all copyright laws as they currently exist. No portion of this material may be reproduced, in any form or by any means, without permission in writing from the publisher.

2–134.

If the force $F = 100$ N lies in the plane $DBEC$, which is parallel to the x–z plane, and makes an angle of 10° with the extended line DB as shown, determine the angle that **F** makes with the diagonal AB of the crate.

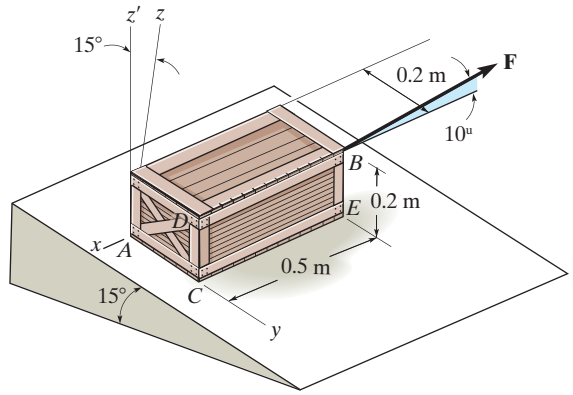

SOLUTION

Use the x, y, z axes.

$$\mathbf{u}_{AB} = \left(\frac{-0.5\mathbf{i} + 0.2\mathbf{j} + 0.2\mathbf{k}}{0.57446}\right)$$

$$= -0.8704\mathbf{i} + 0.3482\mathbf{j} + 0.3482\mathbf{k}$$

$$\mathbf{F} = -100\cos 10°\mathbf{i} + 100\sin 10°\mathbf{k}$$

$$\theta = \cos^{-1}\left(\frac{\mathbf{F}\cdot\mathbf{u}_{AB}}{F\,u_{AB}}\right)$$

$$= \cos^{-1}\left(\frac{-100\,(\cos 10°)(-0.8704) + 0 + 100\sin 10°\,(0.3482)}{100(1)}\right)$$

$$= \cos^{-1}(0.9176) = 23.4°$$ **Ans.**

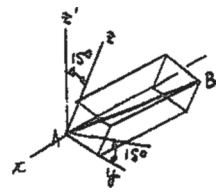

Ans:
$\theta = 23.4°$

Engineering Mechanics Statics 14th edition Hibbeler Solutions Manual

© 2016 Pearson Education, Inc., Upper Saddle River, NJ. All rights reserved. This material is protected under all copyright laws as they currently exist. No portion of this material may be reproduced, in any form or by any means, without permission in writing from the publisher.

2–135.

Determine the magnitudes of the components of force $F = 90$ lb acting parallel and perpendicular to diagonal AB of the crate.

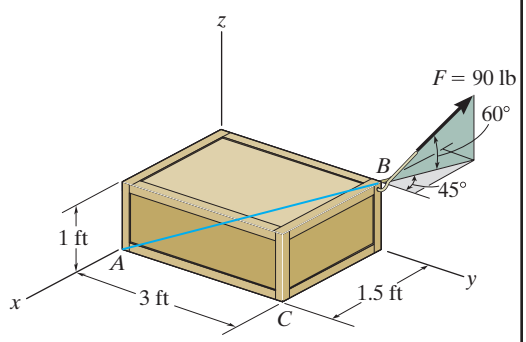

SOLUTION

Force and Unit Vector: The force vector **F** and unit vector $\mathbf{u}_{AB}$ must be determined first. From Fig. *a*

$$\mathbf{F} = 90(-\cos 60^\circ \sin 45^\circ \mathbf{i} + \cos 60^\circ \cos 45^\circ \mathbf{j} + \sin 60^\circ \mathbf{k})$$

$$= \{-31.82\mathbf{i} + 31.82\mathbf{j} + 77.94\mathbf{k}\}\text{ lb}$$

$$\mathbf{u}_{AB} = \frac{\mathbf{r}_{AB}}{r_{AB}} = \frac{(0-1.5)\mathbf{i} + (3-0)\mathbf{j} + (1-0)\mathbf{k}}{\sqrt{(0-1.5)^2 + (3-0)^2 + (1-0)^2}} = -\frac{3}{7}\mathbf{i} - \frac{6}{7}\mathbf{j} + \frac{2}{7}\mathbf{k}$$

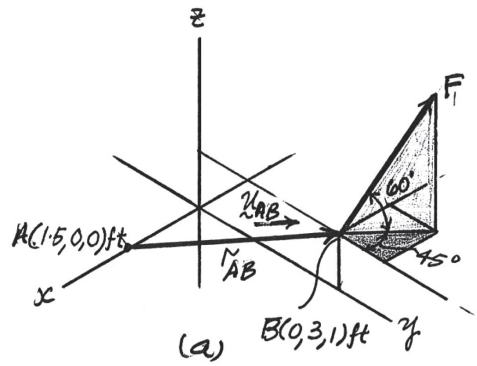

Vector Dot Product: The magnitude of the projected component of **F** parallel to the diagonal AB is

$$[(F)_{AB}]_{\text{pa}} = \mathbf{F}\cdot\mathbf{u}_{AB} = (-31.82\mathbf{i} + 31.82\mathbf{j} + 77.94\mathbf{k})\cdot\left(-\frac{3}{7}\mathbf{i} + \frac{6}{7}\mathbf{j} + \frac{2}{7}\mathbf{k}\right)$$

$$= (-31.82)\left(-\frac{3}{7}\right) + 31.82\left(\frac{6}{7}\right) + 77.94\left(\frac{2}{7}\right)$$

$$= 63.18\text{ lb} = 63.2\text{ lb} \qquad \textbf{Ans.}$$

The magnitude of the component **F** perpendicular to the diagonal AB is

$$[(F)_{AB}]_{\text{pr}} = \sqrt{F^2 - [(F)_{AB}]_{\text{pa}}^{\,2}} = \sqrt{90^2 - 63.18^2} = 64.1\text{ lb} \qquad \textbf{Ans.}$$

Ans:
$[(F)_{AB}]_{\parallel} = 63.2$ lb
$[(F)_{AB}]_{\perp} = 64.1$ lb

Engineering Mechanics Statics 14th edition Hibbeler Solutions Manual

© 2016 Pearson Education, Inc., Upper Saddle River, NJ. All rights reserved. This material is protected under all copyright laws as they currently exist. No portion of this material may be reproduced, in any form or by any means, without permission in writing from the publisher.

***2–136.**

Determine the magnitudes of the projected components of the force $F = 300$ N acting along the x and y axes.

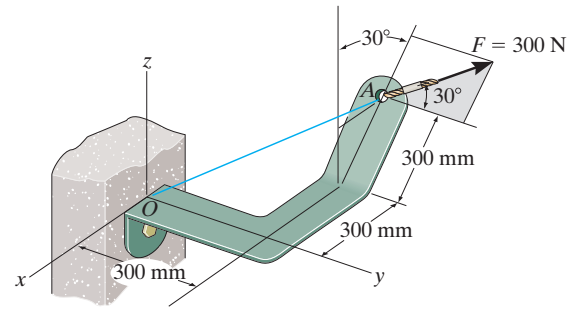

SOLUTION

Force Vector: The force vector **F** must be determined first. From Fig. *a*,

$$\mathbf{F} = -300 \sin 30° \sin 30° \mathbf{i} + 300 \cos 30° \mathbf{j} + 300 \sin 30° \cos 30° \mathbf{k}$$

$$= [-75\mathbf{i} + 259.81\mathbf{j} + 129.90\mathbf{k}] \text{ N}$$

Vector Dot Product: The magnitudes of the projected component of **F** along the x and y axes are

$$F_x = \mathbf{F} \cdot \mathbf{i} = \left(-75\mathbf{i} + 259.81\mathbf{j} + 129.90\mathbf{k}\right) \cdot \mathbf{i}$$

$$= -75(1) + 259.81(0) + 129.90(0)$$

$$= -75 \text{ N}$$

$$F_y = \mathbf{F} \cdot \mathbf{j} = \left(-75\mathbf{i} + 259.81\mathbf{j} + 129.90\mathbf{k}\right) \cdot \mathbf{j}$$

$$= -75(0) + 259.81(1) + 129.90(0)$$

$$= 260 \text{ N}$$

The negative sign indicates that $\mathbf{F}_x$ is directed towards the negative x axis. Thus

$$F_x = 75 \text{ N}, \qquad F_y = 260 \text{ N} \qquad \textbf{Ans.}$$

Ans:
$F_x = 75$ N
$F_y = 260$ N

Engineering Mechanics Statics 14th edition Hibbeler Solutions Manual

© 2016 Pearson Education, Inc., Upper Saddle River, NJ. All rights reserved. This material is protected under all copyright laws as they currently exist. No portion of this material may be reproduced, in any form or by any means, without permission in writing from the publisher.

2–137.

Determine the magnitude of the projected component of the force $F = 300$ N acting along line OA.

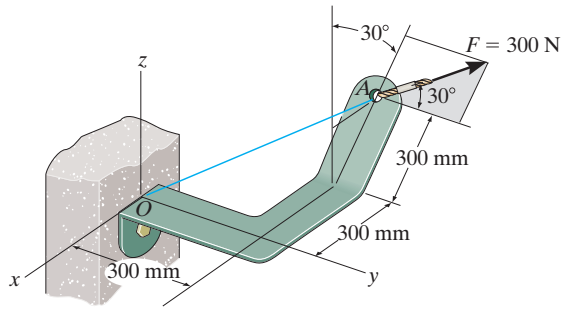

SOLUTION

Force and Unit Vector: The force vector **F** and unit vector $\mathbf{u}_{OA}$ must be determined first. From Fig. a

$$\mathbf{F} = (-300 \sin 30° \sin 30°\mathbf{i} + 300 \cos 30°\mathbf{j} + 300 \sin 30° \cos 30°\mathbf{k})$$

$$= \{-75\mathbf{i} + 259.81\mathbf{j} + 129.90\mathbf{k}\} \text{ N}$$

$$\mathbf{u}_{OA} = \frac{\mathbf{r}_{OA}}{r_{OA}} = \frac{(-0.45 - 0)\mathbf{i} + (0.3 - 0)\mathbf{j} + (0.2598 - 0)\mathbf{k}}{\sqrt{(-0.45 - 0)^2 + (0.3 - 0)^2 + (0.2598 - 0)^2}} = -0.75\mathbf{i} + 0.5\mathbf{j} + 0.4330\mathbf{k}$$

Vector Dot Product: The magnitude of the projected component of **F** along line OA is

$$F_{OA} = \mathbf{F} \cdot \mathbf{u}_{OA} = \left(-75\mathbf{i} + 259.81\mathbf{j} + 129.90\mathbf{k}\right) \cdot \left(-0.75\mathbf{i} + 0.5\mathbf{j} + 0.4330\mathbf{k}\right)$$

$$= (-75)(-0.75) + 259.81(0.5) + 129.90(0.4330)$$

$$= 242 \text{ N} \qquad \textbf{Ans.}$$

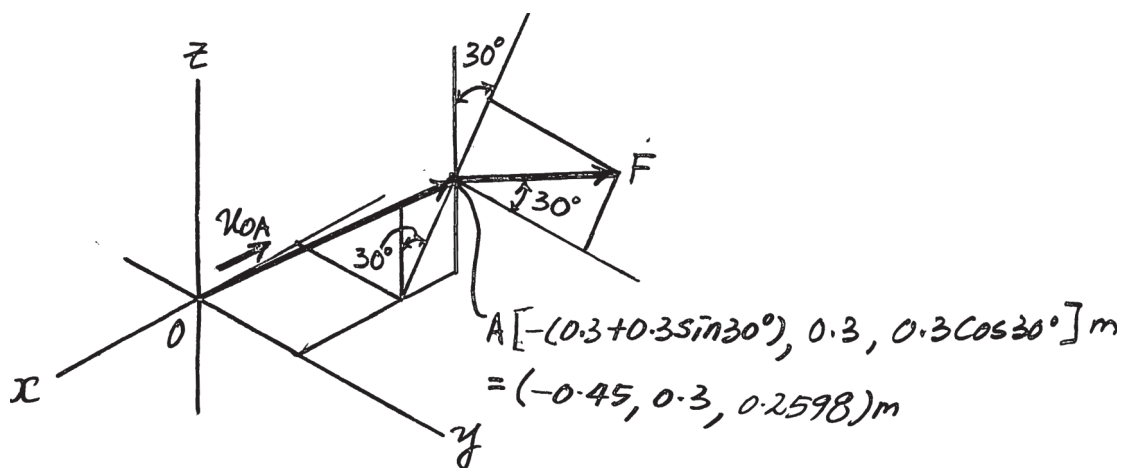

Ans:
$F_{OA} = 242$ N

Engineering Mechanics Statics 14th edition Hibbeler Solutions Manual

© 2016 Pearson Education, Inc., Upper Saddle River, NJ. All rights reserved. This material is protected under all copyright laws as they currently exist. No portion of this material may be reproduced, in any form or by any means, without permission in writing from the publisher.

2–138.

Determine the angle θ between the two cables.

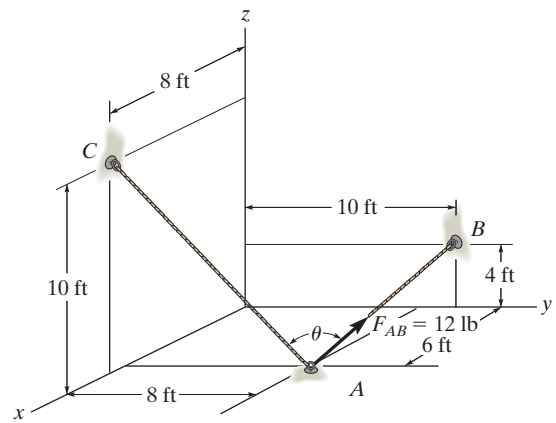

SOLUTION

$$\theta = \cos^{-1}\left(\frac{\mathbf{r}_{AC}\cdot\mathbf{r}_{AB}}{r_{AC}\,r_{AB}}\right)$$

$$= \cos^{-1}\left[\frac{(2\,\mathbf{i} - 8\,\mathbf{j} + 10\,\mathbf{k})\cdot(-6\,\mathbf{i} + 2\,\mathbf{j} + 4\,\mathbf{k})}{\sqrt{2^2 + (-8)^2 + 10^2}\,\sqrt{(-6)^2 + 2^2 + 4^2}}\right]$$

$$= \cos^{-1}\left(\frac{12}{96.99}\right)$$

$\theta = 82.9°$ **Ans.**

Ans:
$\theta = 82.9°$

Engineering Mechanics Statics 14th edition Hibbeler Solutions Manual

© 2016 Pearson Education, Inc., Upper Saddle River, NJ. All rights reserved. This material is protected under all copyright laws as they currently exist. No portion of this material may be reproduced, in any form or by any means, without permission in writing from the publisher.

2–139.

Determine the projected component of the force $F = 12$ lb acting in the direction of cable AC. Express the result as a Cartesian vector.

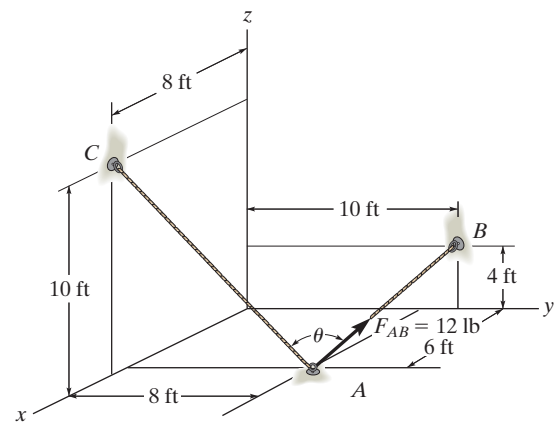

SOLUTION

$$\mathbf{r}_{AC} = \{2\,\mathbf{i} - 8\,\mathbf{j} + 10\,\mathbf{k}\}\text{ ft}$$

$$\mathbf{r}_{AB} = \{-6\,\mathbf{i} + 2\,\mathbf{j} + 4\,\mathbf{k}\}\text{ ft}$$

$$\mathbf{F}_{AB} = 12\left(\frac{\mathbf{r}_{AB}}{r_{AB}}\right) = 12\left(-\frac{6}{7.483}\mathbf{i} + \frac{2}{7.483}\mathbf{j} + \frac{4}{7.483}\mathbf{k}\right)$$

$$\mathbf{F}_{AB} = \{-9.621\,\mathbf{i} + 3.207\,\mathbf{j} + 6.414\,\mathbf{k}\}\text{ lb}$$

$$\mathbf{u}_{AC} = \frac{2}{12.961}\mathbf{i} - \frac{8}{12.961}\mathbf{j} + \frac{10}{12.961}\mathbf{k}$$

$$\text{Proj } F_{AB} = \mathbf{F}_{AB}\cdot\mathbf{u}_{AC} = -9.621\left(\frac{2}{12.961}\right) + 3.207\left(-\frac{8}{12.961}\right) + 6.414\left(\frac{10}{12.961}\right)$$

$$= 1.4846$$

$$\text{Proj } \mathbf{F}_{AB} = F_{AB}\,\mathbf{u}_{AC}$$

$$\text{Proj } \mathbf{F}_{AB} = (1.4846)\left[\frac{2}{12.962}\mathbf{i} - \frac{8}{12.962}\mathbf{j} + \frac{10}{12.962}\mathbf{k}\right]$$

$$\text{Proj } \mathbf{F}_{AB} = \{0.229\,\mathbf{i} - 0.916\,\mathbf{j} + 1.15\,\mathbf{k}\}\text{ lb}$$ **Ans.**

Ans:
Proj $\mathbf{F}_{AB} = \{0.229\,\mathbf{i} - 0.916\,\mathbf{j} + 1.15\,\mathbf{k}\}$ lb

Engineering Mechanics Statics 14th edition Hibbeler Solutions Manual