Engineering Mechanics Dynamics 14th edition Hibbeler Solutions Manual

SKU: 9780134116990-SOLUTIONS

Engineering Mechanics Dynamics 14th edition Hibbeler Solutions Manual

© 2016 Pearson Education, Inc., Upper Saddle River, NJ. All rights reserved. This material is protected under all copyright laws as they currently exist. No portion of this material may be reproduced, in any form or by any means, without permission in writing from the publisher.

22–1.

A spring is stretched 175 mm by an 8-kg block. If the block is displaced 100 mm downward from its equilibrium position and given a downward velocity of 1.50 m/s, determine the differential equation which describes the motion. Assume that positive displacement is downward. Also, determine the position of the block when $t = 0.22$ s.

SOLUTION

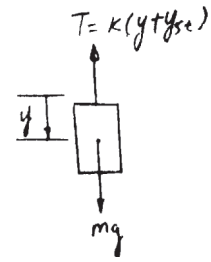

$+\downarrow \Sigma F_y = ma_y; \qquad mg - k(y + y_{st}) = m\ddot{y} \qquad$ where $ky_{st} = mg$

$$\ddot{y} + \frac{k}{m}y = 0$$

Hence $\qquad p = \sqrt{\dfrac{k}{m}} \qquad$ Where $k = \dfrac{8(9.81)}{0.175} = 448.46$ N/m

$$= \sqrt{\frac{448.46}{8}} = 7.487$$

$$\therefore \qquad \ddot{y} + (7.487)^2 y = 0 \qquad \ddot{y} + 56.1y = 0 \qquad \textbf{Ans.}$$

The solution of the above differential equation is of the form:

$y = A \sin pt + B \cos pt$ **(1)**

$v = \dot{y} = Ap \cos pt - Bp \sin pt$ **(2)**

At $t = 0$, $y = 0.1$ m and $v = v_0 = 1.50$ m/s

From Eq. (1) $\qquad 0.1 = A \sin 0 + B \cos 0 \qquad B = 0.1$ m

From Eq. (2) $\qquad v_0 = Ap \cos 0 - 0 \qquad A = \dfrac{v_0}{p} = \dfrac{1.50}{7.487} = 0.2003$ m

Hence $\qquad y = 0.2003 \sin 7.487t + 0.1 \cos 7.487t$

At $t = 0.22$ s, $\qquad y = 0.2003 \sin [7.487(0.22)] + 0.1 \cos [7.487(0.22)]$

$$= 0.192 \text{ m} \qquad \textbf{Ans.}$$

Ans:
$\ddot{y} + 56.1\, y = 0$
$y|_{t=0.22\text{ s}} = 0.192$ m

Engineering Mechanics Dynamics 14th edition Hibbeler Solutions Manual

© 2016 Pearson Education, Inc., Upper Saddle River, NJ. All rights reserved. This material is protected under all copyright laws as they currently exist. No portion of this material may be reproduced, in any form or by any means, without permission in writing from the publisher.

22–2.

A spring has a stiffness of 800 N/m. If a 2-kg block is attached to the spring, pushed 50 mm above its equilibrium position, and released from rest, determine the equation that describes the block's motion. Assume that positive displacement is downward.

SOLUTION

$$p = \sqrt{\frac{k}{m}} = \sqrt{\frac{800}{2}} = 20$$

$$x = A \sin pt + B \cos pt$$

$$x = -0.05 \text{ m} \qquad \text{when } t = 0,$$

$$-0.05 = 0 + B; \qquad B = -0.05$$

$$v = Ap \cos pt - Bp \sin pt$$

$$v = 0 \text{ when } t = 0,$$

$$0 = A(20) - 0; \qquad A = 0$$

Thus,

$$x = -0.05 \cos (20t) \qquad \textbf{Ans.}$$

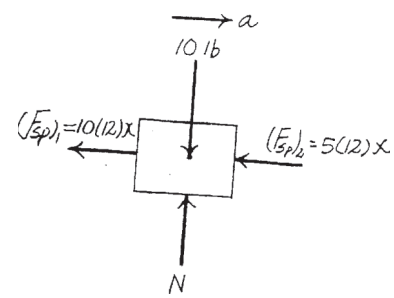

Ans:
$x = -0.05 \cos (20t)$

Engineering Mechanics Dynamics 14th edition Hibbeler Solutions Manual

© 2016 Pearson Education, Inc., Upper Saddle River, NJ. All rights reserved. This material is protected under all copyright laws as they currently exist. No portion of this material may be reproduced, in any form or by any means, without permission in writing from the publisher.

22–3.

A spring is stretched 200 mm by a 15-kg block. If the block is displaced 100 mm downward from its equilibrium position and given a downward velocity of 0.75 m/s, determine the equation which describes the motion. What is the phase angle? Assume that positive displacement is downward.

SOLUTION

$$k = \frac{F}{y} = \frac{15(9.81)}{0.2} = 735.75 \text{ N/m}$$

$$\omega_n = \sqrt{\frac{k}{m}} = \sqrt{\frac{735.75}{15}} = 7.00$$

$$y = A \sin \omega_n t + B \cos \omega_n t$$

$$y = 0.1 \text{ m when } t = 0,$$

$$0.1 = 0 + B; \qquad B = 0.1$$

$$v = A\omega_n \cos \omega_n t - B\omega_n \sin \omega_n t$$

$$v = 0.75 \text{ m/s when } t = 0,$$

$$0.75 = A(7.00)$$

$$A = 0.107$$

$$y = 0.107 \sin (7.00t) + 0.100 \cos (7.00t) \qquad \textbf{Ans.}$$

$$\phi = \tan^{-1}\left(\frac{B}{A}\right) = \tan^{-1}\left(\frac{0.100}{0.107}\right) = 43.0° \qquad \textbf{Ans.}$$

Ans:
$y = 0.107 \sin (7.00t) + 0.100 \cos (7.00t)$
$\phi = 43.0°$

Engineering Mechanics Dynamics 14th edition Hibbeler Solutions Manual

© 2016 Pearson Education, Inc., Upper Saddle River, NJ. All rights reserved. This material is protected under all copyright laws as they currently exist. No portion of this material may be reproduced, in any form or by any means, without permission in writing from the publisher.

***22–4.**

When a 20-lb weight is suspended from a spring, the spring is stretched a distance of 4 in. Determine the natural frequency and the period of vibration for a 10-lb weight attached to the same spring.

SOLUTION

$$k = \frac{20}{\frac{4}{12}} = 60 \text{ lb/ft}$$

$$\omega_n = \sqrt{\frac{k}{m}} = \sqrt{\frac{60}{\frac{10}{32.2}}} = 13.90 \text{ rad/s} \qquad \textbf{Ans.}$$

$$\tau = \frac{2\pi}{\omega_n} = 0.452 \text{ s} \qquad \textbf{Ans.}$$

Ans:
$\omega_n = 13.90$ rad/s
$\tau = 0.452$ s

Engineering Mechanics Dynamics 14th edition Hibbeler Solutions Manual

© 2016 Pearson Education, Inc., Upper Saddle River, NJ. All rights reserved. This material is protected under all copyright laws as they currently exist. No portion of this material may be reproduced, in any form or by any means, without permission in writing from the publisher.

22–5.

When a 3-kg block is suspended from a spring, the spring is stretched a distance of 60 mm. Determine the natural frequency and the period of vibration for a 0.2-kg block attached to the same spring.

SOLUTION

$$k = \frac{F}{\Delta x} = \frac{3(9.81)}{0.060} = 490.5 \text{ N/m}$$

$$\omega_n = \sqrt{\frac{k}{m}} = \sqrt{\frac{490.5}{0.2}} = 49.52 = 49.5 \text{ rad/s} \qquad \textbf{Ans.}$$

$$f = \frac{\omega_n}{2\pi} = \frac{49.52}{2\pi} = 7.88 \text{ Hz}$$

$$\tau = \frac{1}{f} = \frac{1}{7.88} = 0.127 \text{ s} \qquad \textbf{Ans.}$$

Ans:
$\omega_n = 49.5$ rad/s
$\tau = 0.127$ s

Engineering Mechanics Dynamics 14th edition Hibbeler Solutions Manual

© 2016 Pearson Education, Inc., Upper Saddle River, NJ. All rights reserved. This material is protected under all copyright laws as they currently exist. No portion of this material may be reproduced, in any form or by any means, without permission in writing from the publisher.

22–6.

An 8-kg block is suspended from a spring having a stiffness $k = 80$ N/m. If the block is given an upward velocity of 0.4 m/s when it is 90 mm above its equilibrium position, determine the equation which describes the motion and the maximum upward displacement of the block measured from the equilibrium position. Assume that positive displacement is measured downward.

SOLUTION

$$\omega_n = \sqrt{\frac{k}{m}} = \sqrt{\frac{80}{8}} = 3.162 \text{ rad/s}$$

$$v = -0.4 \text{ m/s}, \qquad x = -0.09 \text{ m at } t = 0$$

$$x = A \sin \omega_n t + B \cos \omega_n t$$

$$-0.09 = 0 + B$$

$$B = -0.09$$

$$v = A\omega_n \cos \omega_n t - B\omega_n \sin \omega_n t$$

$$-0.4 = A(3.162) - 0$$

$$A = -0.126$$

Thus, $x = -0.126 \sin (3.16t) - 0.09 \cos (3.16t)$ m **Ans.**

$C = \sqrt{A^2 + B^2} = \sqrt{(-0.126)^2 + (-0.09)} = 0.155$ m **Ans.**

Ans:
$x = \{-0.126 \sin (3.16t) - 0.09 \cos (3.16t)\}$ m
$C = 0.155$ m

Engineering Mechanics Dynamics 14th edition Hibbeler Solutions Manual

© 2016 Pearson Education, Inc., Upper Saddle River, NJ. All rights reserved. This material is protected under all copyright laws as they currently exist. No portion of this material may be reproduced, in any form or by any means, without permission in writing from the publisher.

22–7.

A 2-lb weight is suspended from a spring having a stiffness $k = 2$ lb/in. If the weight is pushed 1 in. upward from its equilibrium position and then released from rest, determine the equation which describes the motion. What is the amplitude and the natural frequency of the vibration?

SOLUTION

$$k = 2(12) = 24 \text{ lb/ft}$$

$$\omega_n = \sqrt{\frac{k}{m}} = \sqrt{\frac{24}{\frac{2}{32.2}}} = 19.66 = 19.7 \text{ rad/s} \qquad \textbf{Ans.}$$

$$y = -\frac{1}{12}, \qquad v = 0 \text{ at } t = 0$$

From Eqs. 22–3 and 22–4,

$$-\frac{1}{12} = 0 + B$$

$$B = -0.0833$$

$$0 = A\omega_n + 0$$

$$A = 0$$

$$C = \sqrt{A^2 + B^2} = 0.0833 \text{ ft} = 1 \text{ in.} \qquad \textbf{Ans.}$$

Position equation,

$$y = (0.0833 \cos 19.7t) \text{ ft} \qquad \textbf{Ans.}$$

Ans:
$\omega_n = 19.7$ rad/s
$C = 1$ in.
$y = (0.0833 \cos 19.7t)$ ft

Engineering Mechanics Dynamics 14th edition Hibbeler Solutions Manual

© 2016 Pearson Education, Inc., Upper Saddle River, NJ. All rights reserved. This material is protected under all copyright laws as they currently exist. No portion of this material may be reproduced, in any form or by any means, without permission in writing from the publisher.

***22–8.**

A 6-lb weight is suspended from a spring having a stiffness $k = 3$ lb/in. If the weight is given an upward velocity of 20 ft/s when it is 2 in. above its equilibrium position, determine the equation which describes the motion and the maximum upward displacement of the weight, measured from the equilibrium position. Assume positive displacement is downward.

SOLUTION

$$k = 3(12) = 36 \text{ lb/ft}$$

$$\omega_n = \sqrt{\frac{k}{m}} = \sqrt{\frac{36}{\frac{6}{32.2}}} = 13.90 \text{ rad/s}$$

$$t = 0, \qquad v = -20 \text{ ft/s}, \qquad y = -\frac{1}{6} \text{ ft}$$

From Eq. 22–3,

$$-\frac{1}{6} = 0 + B$$

$$B = -0.167$$

From Eq. 22–4,

$$-20 = A(13.90) + 0$$

$$A = -1.44$$

Thus,

$$y = [-1.44 \sin(13.9t) - 0.167 \cos(13.9t)] \text{ ft} \qquad \textbf{Ans.}$$

From Eq. 22–10,

$$C = \sqrt{A^2 + B^2} = \sqrt{(1.44)^2 + (-0.167)^2} = 1.45 \text{ ft} \qquad \textbf{Ans.}$$

Ans:
$y = [-1.44 \sin(13.9t) - 0.167 \cos(13.9t)]$ ft
$C = 1.45$ ft

Engineering Mechanics Dynamics 14th edition Hibbeler Solutions Manual

© 2016 Pearson Education, Inc., Upper Saddle River, NJ. All rights reserved. This material is protected under all copyright laws as they currently exist. No portion of this material may be reproduced, in any form or by any means, without permission in writing from the publisher.

22–9.

A 3-kg block is suspended from a spring having a stiffness of $k = 200$ N/m. If the block is pushed 50 mm upward from its equilibrium position and then released from rest, determine the equation that describes the motion. What are the amplitude and the frequency of the vibration? Assume that positive displacement is downward.

SOLUTION

$$\omega_n = \sqrt{\frac{k}{m}} = \sqrt{\frac{200}{3}} = 8.16 \text{ rad/s} \qquad \textbf{Ans.}$$

$$x = A \sin \omega_n t + B \cos \omega_n t$$

$$x = -0.05 \text{ m when } t = 0,$$

$$-0.05 = 0 + B; \qquad B = -0.05$$

$$v = Ap \cos \omega_n t - B\omega_n \sin \omega_n t$$

$$v = 0 \text{ when } t = 0,$$

$$0 = A(8.165) - 0; \qquad A = 0$$

Hence,

$$x = -0.05 \cos (8.16t) \qquad \textbf{Ans.}$$

$$C = \sqrt{A^2 + B^2} = \sqrt{(0)^2 + (-0.05)} = 0.05 \text{ m} = 50 \text{ mm} \qquad \textbf{Ans.}$$

Ans:
$\omega_n = 8.16$ rad/s
$x = -0.05 \cos (8.16t)$
$C = 50$ mm

Engineering Mechanics Dynamics 14th edition Hibbeler Solutions Manual

© 2016 Pearson Education, Inc., Upper Saddle River, NJ. All rights reserved. This material is protected under all copyright laws as they currently exist. No portion of this material may be reproduced, in any form or by any means, without permission in writing from the publisher.

22–10.

The uniform rod of mass m is supported by a pin at A and a spring at B. If B is given a small sideward displacement and released, determine the natural period of vibration.

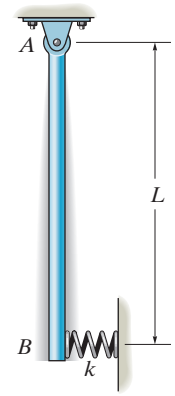

SOLUTION

Equation of Motion. The mass moment of inertia of the rod about A is $I_A = \frac{1}{3}mL^2$. Referring to the FBD. of the rod, Fig. a,

$$\circlearrowleft + \Sigma M_A = I_A\alpha; \qquad -mg\left(\frac{L}{2}\sin\theta\right) - (kx\cos\theta)(L) = \left(\frac{1}{3}mL^2\right)\alpha$$

However; $\quad x = L\sin\theta$. Then

$$\frac{-mgL}{2}\sin\theta - kL^2\sin\theta\cos\theta = \frac{1}{3}mL^2\alpha$$

Using the trigonometry identity $\sin 2\theta = 2\sin\theta\cos\theta$,

$$\frac{-mgL}{2}\sin\theta - \frac{KL^2}{2}\sin 2\theta = \frac{1}{3}mL^2\alpha$$

Here since θ is small $\sin\theta \simeq \theta$ and $\sin 2\theta \simeq 2\theta$. Also $\alpha = \ddot{\theta}$. Then the above equation becomes

$$\frac{1}{3}mL^2\ddot{\theta} + \left(\frac{mgL}{2} + kL^2\right)\theta = 0$$

$$\ddot{\theta} + \frac{3mg + 6kL}{2mL}\theta = 0$$

Comparing to that of the Standard form, $\omega_n = \sqrt{\frac{3mg + 6kL}{2mL}}$. Then

$$\tau = \frac{2\pi}{\omega_n} = 2\pi\sqrt{\frac{2mL}{3mg + 6kL}} \qquad \textbf{Ans.}$$

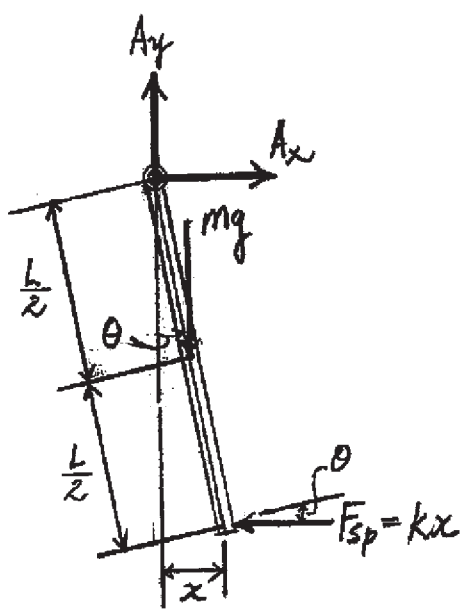

(a)

$K L^2 \sin\theta \cos\theta$

$\frac{KL^2}{2}$

Ans:

$$\tau = 2\pi\sqrt{\frac{2mL}{3mg + 6kL}}$$

Engineering Mechanics Dynamics 14th edition Hibbeler Solutions Manual

© 2016 Pearson Education, Inc., Upper Saddle River, NJ. All rights reserved. This material is protected under all copyright laws as they currently exist. No portion of this material may be reproduced, in any form or by any means, without permission in writing from the publisher.

22–11.

While standing in an elevator, the man holds a pendulum which consists of an 18-in. cord and a 0.5-lb bob. If the elevator is descending with an acceleration $a = 4\ \text{ft/s}^2$, determine the natural period of vibration for small amplitudes of swing.

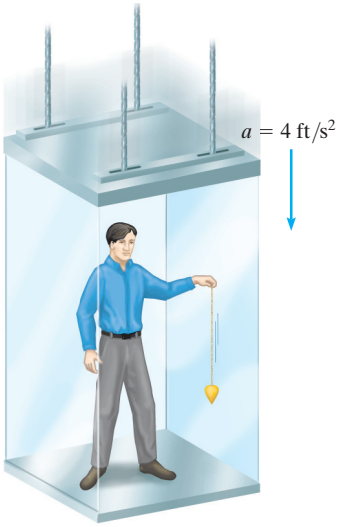

SOLUTION

Since the acceleration of the pendulum is $(32.2 - 4) = 28.2\ \text{ft/s}^2$

Using the result of Example 22–1,

We have

$$\omega_n = \sqrt{\frac{g}{l}} = \sqrt{\frac{28.2}{18/12}} = 4.336\ \text{rad/s}$$

$$\tau = \frac{2\pi}{\omega_n} = \frac{2\pi}{4.336} = 1.45\ \text{s} \qquad \textbf{Ans.}$$

Ans:
$\tau = 1.45\ \text{s}$

Engineering Mechanics Dynamics 14th edition Hibbeler Solutions Manual

© 2016 Pearson Education, Inc., Upper Saddle River, NJ. All rights reserved. This material is protected under all copyright laws as they currently exist. No portion of this material may be reproduced, in any form or by any means, without permission in writing from the publisher.

***22–12.**

Determine the natural period of vibration of the uniform bar of mass m when it is displaced downward slightly and released.

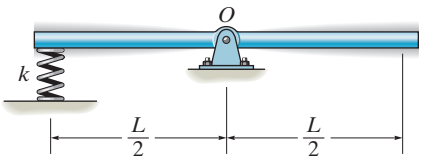

SOLUTION

Equation of Motion. The mass moment of inertia of the bar about O is $I_0 = \frac{1}{12}mL^2$.

Referring to the FBD of the rod, Fig. a,

$$\circlearrowleft + \Sigma M_0 = I_0\alpha; \quad -ky\cos\theta\left(\frac{L}{2}\right) = \left(\frac{1}{12}mL^2\right)\alpha$$

However, $y = \frac{L}{2}\sin\theta$. Then

$$-k\left(\frac{L}{2}\sin\theta\right)\cos\theta\left(\frac{L}{2}\right) = \frac{1}{12}mL^2\alpha$$

Using the trigonometry identity $\sin 2\theta = 2\sin\theta\cos\theta$, we obtain

$$\frac{1}{12}mL^2\alpha + \frac{kL^2}{8}\sin 2\theta = 0$$

Here since θ is small, $\sin 2\theta \simeq 2\theta$. Also, $\alpha = \ddot{\theta}$. Then the above equation becomes

$$\frac{1}{12}mL^2\ddot{\theta} + \frac{kL^2}{4}\theta = 0$$

$$\ddot{\theta} + \frac{3k}{m}\theta = 0$$

Comparing to that of the Standard form, $\omega_n = \sqrt{\frac{3k}{m}}$. Then

$$\tau = \frac{2\pi}{\omega_n} = 2\pi\sqrt{\frac{m}{3k}} \qquad \textbf{Ans.}$$

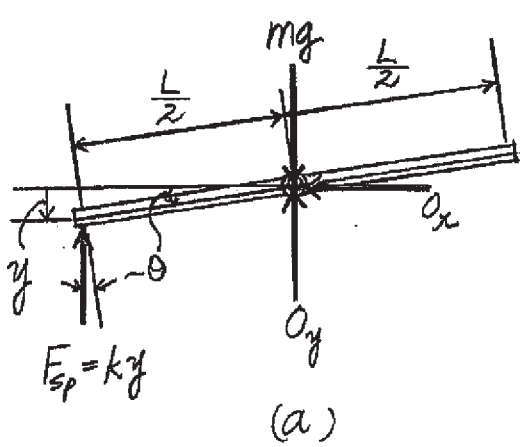

(a)

Ans:

$$\tau = 2\pi\sqrt{\frac{m}{3k}}$$

Engineering Mechanics Dynamics 14th edition Hibbeler Solutions Manual

© 2016 Pearson Education, Inc., Upper Saddle River, NJ. All rights reserved. This material is protected under all copyright laws as they currently exist. No portion of this material may be reproduced, in any form or by any means, without permission in writing from the publisher.

22–13.

The body of arbitrary shape has a mass m, mass center at G, and a radius of gyration about G of k_G. If it is displaced a slight amount θ from its equilibrium position and released, determine the natural period of vibration.

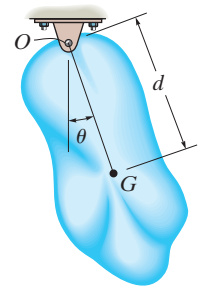

SOLUTION

$\circlearrowleft + \Sigma M_O = I_O\,\alpha; \qquad -mgd\sin\theta = \left[mk_G^2 + md^2\right]\ddot{\theta}$

$$\ddot{\theta} + \frac{gd}{k_G^2 + d^2}\sin\theta = 0$$

However, for small rotation $\sin\theta \approx \theta$. Hence

$$\ddot{\theta} + \frac{gd}{k_G^2 + d^2}\theta = 0$$

From the above differential equation, $\omega_n = \sqrt{\dfrac{gd}{k_G^2 + d^2}}$.

$$\tau = \frac{2\pi}{\omega_n} = \frac{2\pi}{\sqrt{\dfrac{gd}{k_G^2 + d^2}}} = 2\pi\sqrt{\frac{k_G^2 + d^2}{gd}} \qquad \textbf{Ans.}$$

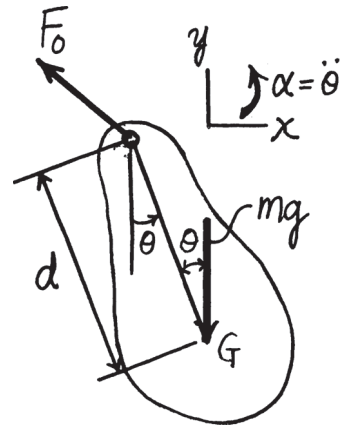

Ans:

$$\tau = 2\pi\sqrt{\frac{k_G^2 + d^2}{gd}}$$

Engineering Mechanics Dynamics 14th edition Hibbeler Solutions Manual

© 2016 Pearson Education, Inc., Upper Saddle River, NJ. All rights reserved. This material is protected under all copyright laws as they currently exist. No portion of this material may be reproduced, in any form or by any means, without permission in writing from the publisher.

22–14.

The 20-lb rectangular plate has a natural period of vibration $\tau = 0.3$ s, as it oscillates around the axis of rod AB. Determine the torsional stiffness k, measured in lb · ft/rad, of the rod. Neglect the mass of the rod.

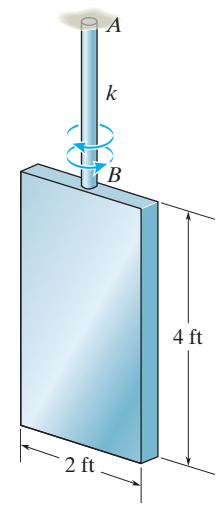

SOLUTION

$T = k\theta$

$\Sigma M_z = I_z\alpha; \quad -k\theta = \frac{1}{12}\left(\frac{20}{32.2}\right)(2)^2\ddot{\theta}$

$\ddot{\theta} + k(4.83)\theta = 0$

$\tau = \frac{2\pi}{\sqrt{k(4.83)}} = 0.3$

$k = 90.8 \text{ lb} \cdot \text{ft/rad}$ **Ans.**

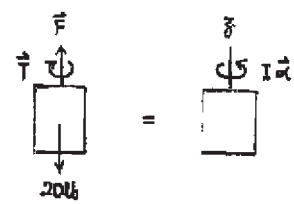

Ans:
$k = 90.8 \text{ lb} \cdot \text{ft/rad}$

Engineering Mechanics Dynamics 14th edition Hibbeler Solutions Manual

© 2016 Pearson Education, Inc., Upper Saddle River, NJ. All rights reserved. This material is protected under all copyright laws as they currently exist. No portion of this material may be reproduced, in any form or by any means, without permission in writing from the publisher.

22–15.

A platform, having an unknown mass, is supported by *four* springs, each having the same stiffness k. When nothing is on the platform, the period of vertical vibration is measured as 2.35 s; whereas if a 3-kg block is supported on the platform, the period of vertical vibration is 5.23 s. Determine the mass of a block placed on the (empty) platform which causes the platform to vibrate vertically with a period of 5.62 s. What is the stiffness k of each of the springs?

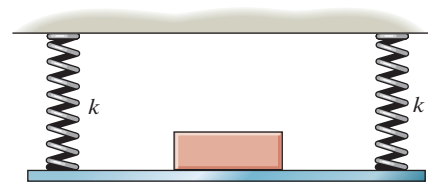

SOLUTION

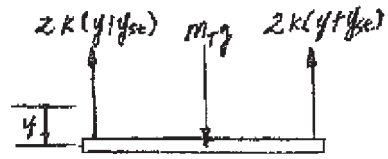

$+\downarrow \Sigma F_y = ma_y;$ $\quad m\tau g - 4k(y + y_{\tau s}) = m\tau\ddot{y}$ $\quad$ Where $4k\, y_{\tau s} = m_\tau g$

$$\ddot{y} + \frac{4k}{m\tau}y = 0$$

Hence
$$P = \sqrt{\frac{4k}{m\tau}}$$

$$\tau = \frac{2\pi}{P} = 2\pi\sqrt{\frac{m\tau}{4k}}$$

For empty platform $m\tau = m_P$, where m_P is the mass of the platform.

$$2.35 = 2\pi\sqrt{\frac{m_P}{4k}} \qquad \textbf{(1)}$$

When 3-kg block is on the platform $m_\tau = m_P + 3$.

$$5.23 = 2\pi\sqrt{\frac{m_P + 3}{4k}} \qquad \textbf{(2)}$$

When an unknown mass is on the platform $m_\tau = m_P + m_B$.

$$5.62 = 2\pi\sqrt{\frac{m_P + m_B}{4k}} \qquad \textbf{(3)}$$

Solving Eqs. (1) to (3) yields :

$$k = 1.36\ \text{N/m} \qquad m_B = 3.58\ \text{kg} \qquad \textbf{Ans.}$$

$$m_P = 0.7589\ \text{kg}$$

Ans:
$k = 1.36$ N/m
$m_B = 3.58$ kg

Engineering Mechanics Dynamics 14th edition Hibbeler Solutions Manual

© 2016 Pearson Education, Inc., Upper Saddle River, NJ. All rights reserved. This material is protected under all copyright laws as they currently exist. No portion of this material may be reproduced, in any form or by any means, without permission in writing from the publisher.

***22–16.**

A block of mass m is suspended from two springs having a stiffness of k_1 and k_2, arranged a) parallel to each other, and b) as a series. Determine the equivalent stiffness of a single spring with the same oscillation characteristics and the period of oscillation for each case.

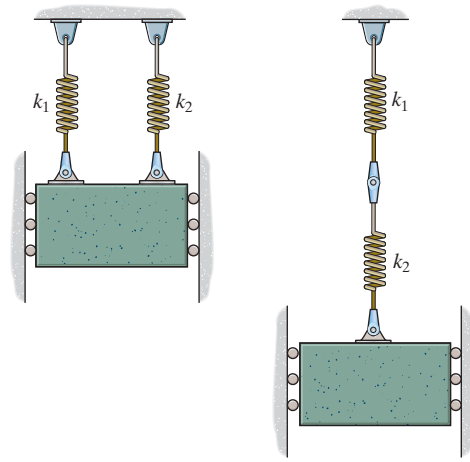

(a) (b)

SOLUTION

(a) When the springs are arranged in parallel, the equivalent spring stiffness is

$$k_{eq} = k_1 + k_2 \qquad \textbf{Ans.}$$

The natural frequency of the system is

$$\omega_n = \sqrt{\frac{k_{eq}}{m}} = \sqrt{\frac{k_1 + k_2}{m}}$$

Thus, the period of oscillation of the system is

$$\tau = \frac{2\pi}{\omega_n} = \frac{2\pi}{\sqrt{\dfrac{k_1 + k_2}{m}}} = 2\pi\sqrt{\frac{m}{k_1 + k_2}} \qquad \textbf{Ans.}$$

(b) When the springs are arranged in a series, the equivalent stiffness of the system can be determined by equating the stretch of both spring systems subjected to the same load F.

$$\frac{F}{k_1} + \frac{F}{k_2} = \frac{F}{k_{eq}}$$

$$\frac{1}{k_1} + \frac{1}{k_2} = \frac{1}{k_{eq}}$$

$$\frac{k_2 + k_1}{k_1 k_2} = \frac{1}{k_{eq}}$$

$$k_{eq} = \frac{k_1 k_2}{k_1 + k_2} \qquad \textbf{Ans.}$$

The natural frequency of the system is

$$\omega_n = \sqrt{\frac{k_{eq}}{m}} = \sqrt{\frac{\left(\dfrac{k_1 k_2}{k_2 + k_1}\right)}{m}}$$

Thus, the period of oscillation of the system is

$$\tau = \frac{2\pi}{\omega_n} = \frac{2\pi}{\sqrt{\dfrac{\left(\dfrac{k_1 k_2}{k_2 + k_1}\right)}{m}}} = 2\pi\sqrt{\frac{m(k_1 + k_2)}{k_1 k_2}} \qquad \textbf{Ans.}$$

Ans:

$k_{eq} = k_1 + k_2$

$\tau = 2\pi\sqrt{\dfrac{m}{k_1 + k_2}}$

$k_{eq} = \dfrac{k_1 k_2}{k_1 + k_2}$

$\tau = 2\pi\sqrt{\dfrac{m(k_1 + k_2)}{k_1 k_2}}$

Engineering Mechanics Dynamics 14th edition Hibbeler Solutions Manual

© 2016 Pearson Education, Inc., Upper Saddle River, NJ. All rights reserved. This material is protected under all copyright laws as they currently exist. No portion of this material may be reproduced, in any form or by any means, without permission in writing from the publisher.

22–17.

The 15-kg block is suspended from two springs having a different stiffness and arranged a) parallel to each other, and b) as a series. If the natural periods of oscillation of the parallel system and series system are observed to be 0.5 s and 1.5 s, respectively, determine the spring stiffnesses k_1 and k_2.

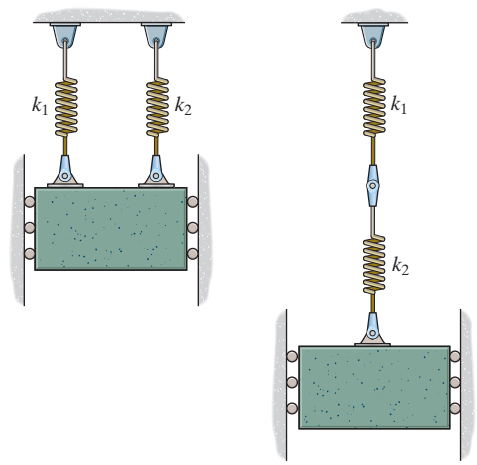

(a) (b)

SOLUTION

The equivalent spring stiffness of the spring system arranged in parallel is $(k_{eq})_P = k_1 + k_2$ and the equivalent stiffness of the spring system arranged in a series can be determined by equating the stretch of the system to a single equivalent spring when they are subjected to the same load.

$$\frac{F}{k_1} + \frac{F}{k_2} = \frac{F}{(k_{eq})_S}$$

$$\frac{k_2 + k_1}{k_1 k_2} = \frac{1}{(k_{eq})_S}$$

$$(k_{eq})_S = \frac{k_1 k_2}{k_1 + k_2}$$

Thus the natural frequencies of the parallel and series spring system are

$$(\omega_n)_P = \sqrt{\frac{(k_{eq})_P}{m}} = \sqrt{\frac{k_1 + k_2}{15}}$$

$$(\omega_n)_S = \sqrt{\frac{(k_{eq})_S}{m}} = \sqrt{\frac{\left(\dfrac{k_1 k_2}{k_1 + k_2}\right)}{15}} = \sqrt{\frac{k_1 k_2}{15(k_1 + k_2)}}$$

Thus, the natural periods of oscillation are

$$\tau_P = \frac{2\pi}{(\omega_n)_P} = 2\pi\sqrt{\frac{15}{k_1 + k_2}} = 0.5 \qquad \textbf{(1)}$$

$$\tau_S = \frac{2\pi}{(\omega_n)_S} = 2\pi\sqrt{\frac{15(k_1 + k_2)}{k_1 k_2}} = 1.5 \qquad \textbf{(2)}$$

Solving Eqs. (1) and (2),

$$k_1 = 2067 \text{ N/m or } 302 \text{ N/m} \qquad \textbf{Ans.}$$

$$k_2 = 302 \text{ N/m or } 2067 \text{ N/m} \qquad \textbf{Ans.}$$

Ans:
$k_1 = 2067$ N/m
$k_2 = 302$ N/m
or vice versa

Engineering Mechanics Dynamics 14th edition Hibbeler Solutions Manual

© 2016 Pearson Education, Inc., Upper Saddle River, NJ. All rights reserved. This material is protected under all copyright laws as they currently exist. No portion of this material may be reproduced, in any form or by any means, without permission in writing from the publisher.

22–18.

The uniform beam is supported at its ends by two springs A and B, each having the same stiffness k. When nothing is supported on the beam, it has a period of vertical vibration of 0.83 s. If a 50-kg mass is placed at its center, the period of vertical vibration is 1.52 s. Compute the stiffness of each spring and the mass of the beam.

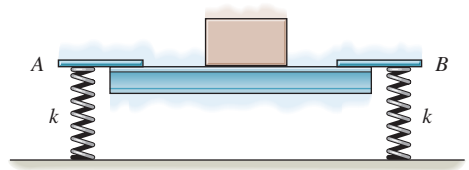

SOLUTION

$$\tau = 2\pi\sqrt{\frac{m}{k}}$$

$$\frac{\tau^2}{(2\pi)^2} = \frac{m}{k}$$

$$\frac{(0.83)^2}{(2\pi)^2} = \frac{m_B}{2k} \qquad \textbf{(1)}$$

$$\frac{(1.52)^2}{(2\pi)^2} = \frac{m_B + 50}{2k} \qquad \textbf{(2)}$$

Eqs. (1) and (2) become

$$m_B = 0.03490k$$

$$m_B + 50 = 0.1170k$$

$$m_B = 21.2 \text{ kg} \qquad \textbf{Ans.}$$

$$k = 609 \text{ N/m} \qquad \textbf{Ans.}$$

Ans:
$m_B = 21.2$ kg
$k = 609$ N/m

Engineering Mechanics Dynamics 14th edition Hibbeler Solutions Manual

© 2016 Pearson Education, Inc., Upper Saddle River, NJ. All rights reserved. This material is protected under all copyright laws as they currently exist. No portion of this material may be reproduced, in any form or by any means, without permission in writing from the publisher.

22–19.

The slender rod has a mass of 0.2 kg and is supported at O by a pin and at its end A by two springs, each having a stiffness $k = 4\ \text{N/m}$. The period of vibration of the rod can be set by fixing the 0.5-kg collar C to the rod at an appropriate location along its length. If the springs are originally unstretched when the rod is vertical, determine the position y of the collar so that the natural period of vibration becomes $\tau = 1$ s. Neglect the size of the collar.

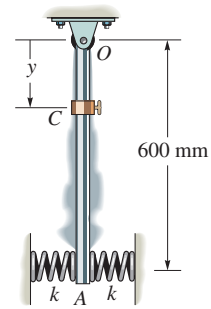

SOLUTION

Moment of inertia about O:

$$I_O = \frac{1}{3}(0.2)(0.6)^2 + 0.5y^2 = 0.024 + 0.5y^2$$

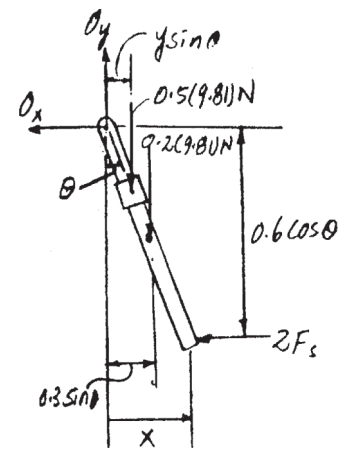

Each spring force $F_s = kx = 4x$.

$$\circlearrowleft + \Sigma M_O = I_O\,\alpha; \qquad -2(4x)(0.6\cos\theta) - 0.2(9.81)(0.3\sin\theta)$$

$$-0.5(9.81)(y\sin\theta) = (0.024 + 0.5y^2)\,\ddot{\theta}$$

$$-4.8x\cos\theta - (0.5886 + 4.905y)\sin\theta = (0.024 + 0.5y^2)\ddot{\theta}$$

However, for small displacement $x = 0.6\theta$, $\sin\theta \approx \theta$ and $\cos\theta = 1$. Hence

$$\ddot{\theta} + \frac{3.4686 + 4.905y}{0.024 + 0.5y^2}\theta = 0$$

From the above differential equation, $p = \sqrt{\dfrac{3.4686 + 4.905y}{0.024 + 0.5y^2}}$.

$$\tau = \frac{2\pi}{p}$$

$$1 = \frac{2\pi}{\sqrt{\dfrac{3.4686 + 4.905y}{0.024 + 0.5y^2}}}$$

$$19.74y^2 - 4.905y - 2.5211 = 0$$

$$y = 0.503\ \text{m} = 503\ \text{mm} \qquad \textbf{Ans.}$$

Ans:
$y = 503$ mm

Engineering Mechanics Dynamics 14th edition Hibbeler Solutions Manual

© 2016 Pearson Education, Inc., Upper Saddle River, NJ. All rights reserved. This material is protected under all copyright laws as they currently exist. No portion of this material may be reproduced, in any form or by any means, without permission in writing from the publisher.

***22–20.**

A uniform board is supported on two wheels which rotate in opposite directions at a constant angular speed. If the coefficient of kinetic friction between the wheels and board is μ, determine the frequency of vibration of the board if it is displaced slightly, a distance x from the midpoint between the wheels, and released.

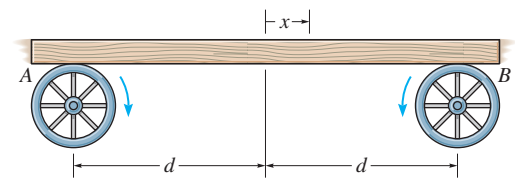

SOLUTION

***Freebody Diagram*:** When the board is being displaced x to the right, the *restoring force* is due to the unbalance friction force at A and B $\left[(F_f)_B > (F_f)_A\right]$.

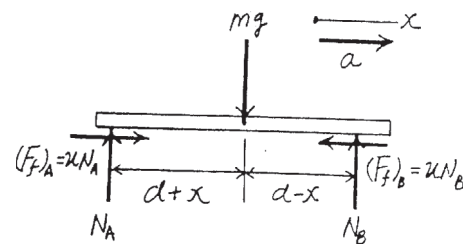

***Equation of Motion*:**

$$\circlearrowleft + \Sigma M_A = \Sigma (M_A)_k\,; \qquad N_B\,(2d) - mg(d + x) = 0$$

$$N_B = \frac{mg(d + x)}{2d}$$

$$+\uparrow \Sigma F_y = m(a_G)_y\,; \qquad N_A + \frac{mg(d + x)}{2d} - mg = 0$$

$$N_A = \frac{mg(d - x)}{2d}$$

$$\xrightarrow{+} \Sigma F_x = m(a_G)_x\,; \qquad \mu\left[\frac{mg(d - x)}{2d}\right] - \mu\left[\frac{mg(d + x)}{2d}\right] = ma$$

$$a + \frac{\mu g}{d}x = 0 \qquad \textbf{(1)}$$

***Kinematics*:** Since $a = \dfrac{d^2x}{dt^2} = \ddot{x}$, then substitute this value into Eq.(1), we have

$$\ddot{x} + \frac{\mu g}{d}x = 0 \qquad \textbf{(2)}$$

From Eq.(2), $\omega_n{}^2 = \dfrac{\mu g}{d}$, thus, $\omega_n = \sqrt{\dfrac{\mu g}{d}}$. Applying Eq. 22–4, we have

$$f = \frac{\omega_n}{2\pi} = \frac{1}{2\pi}\sqrt{\frac{\mu g}{d}} \qquad \textbf{Ans.}$$

Ans:
$f = \dfrac{1}{2\pi}\sqrt{\dfrac{\mu g}{d}}$

Engineering Mechanics Dynamics 14th edition Hibbeler Solutions Manual

© 2016 Pearson Education, Inc., Upper Saddle River, NJ. All rights reserved. This material is protected under all copyright laws as they currently exist. No portion of this material may be reproduced, in any form or by any means, without permission in writing from the publisher.

22–21.

If the wire AB is subjected to a tension of 20 lb, determine the equation which describes the motion when the 5-lb weight is displaced 2 in. horizontally and released from rest.

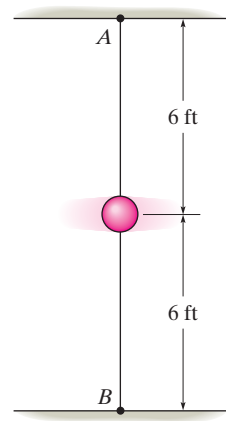

SOLUTION

$L' \equiv L$

$\overset{+}{\leftarrow} \Sigma F_x = m\,a_x; \qquad -2T\dfrac{x}{L} = m\ddot{x}$

$$\ddot{x} + \frac{2T}{Lm}x = 0$$

$$P = \sqrt{\frac{2T}{Lm}} = \sqrt{\frac{2(20)}{6\left(\frac{5}{32.2}\right)}} = 6.55 \text{ rad/s}$$

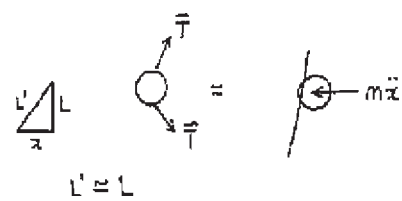

$x = A \sin pt + B \cos pt$

$x = \dfrac{1}{6}$ ft at $t = 0$, $\qquad$ Thus $B = \dfrac{1}{6} = 0.167$

$v = A\,p \cos pt - B\,p \sin pt$

$v = 0$ at $t = 0$, $\qquad$ Thus $A = 0$

So that

$x = 0.167 \cos 6.55t$ **Ans.**

Ans:
$x = 0.167 \cos 6.55t$

Engineering Mechanics Dynamics 14th edition Hibbeler Solutions Manual

© 2016 Pearson Education, Inc., Upper Saddle River, NJ. All rights reserved. This material is protected under all copyright laws as they currently exist. No portion of this material may be reproduced, in any form or by any means, without permission in writing from the publisher.

22–22.

The bar has a length l and mass m. It is supported at its ends by rollers of negligible mass. If it is given a small displacement and released, determine the natural frequency of vibration.

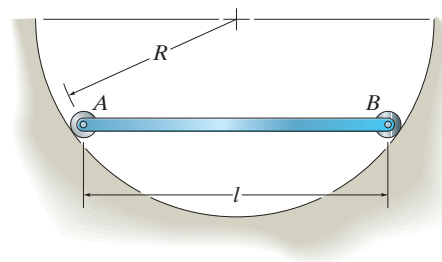

SOLUTION

Moment of inertia about point O:

$$I_O = \frac{1}{12}ml^2 + m\left(\sqrt{R^2 - \frac{l^2}{4}}\right)^2 = m\left(R^2 - \frac{1}{6}l^2\right)$$

$$\circlearrowleft + \Sigma M_O = I_O\alpha; \qquad mg\left(\sqrt{R^2 - \frac{l^2}{4}}\right)\theta = -m\left(R^2 - \frac{1}{6}l^2\right)\ddot{\theta}$$

$$\ddot{\theta} + \frac{3g(4R^2 - l^2)^{\frac{1}{2}}}{6R^2 - l^2}\theta = 0$$

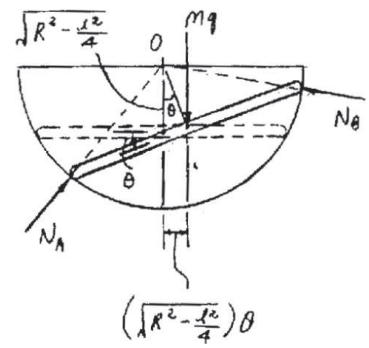

From the above differential equation, $\omega_n = \sqrt{\dfrac{3g(4R^2 - l^2)^{\frac{1}{2}}}{6R^2 - l^2}}$. **Ans.**

Ans:

$$\omega_n = \sqrt{\frac{3g(4R^2 - l^2)^{1/2}}{6R^2 - l^2}}$$

Engineering Mechanics Dynamics 14th edition Hibbeler Solutions Manual

© 2016 Pearson Education, Inc., Upper Saddle River, NJ. All rights reserved. This material is protected under all copyright laws as they currently exist. No portion of this material may be reproduced, in any form or by any means, without permission in writing from the publisher.

22–23.

The 20-kg disk, is pinned at its mass center O and supports the 4-kg block A. If the belt which passes over the disk is not allowed to slip at its contacting surface, determine the natural period of vibration of the system.

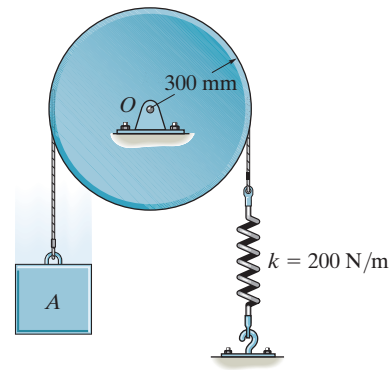

SOLUTION

Equation of Motion. The mass moment of inertia of the disk about its mass center O is $I_0 = \frac{1}{2}mr^2 = \frac{1}{2}(20)(0.3^2) = 0.9\ \text{kg}\cdot\text{m}^2$. When the disk undergoes a small angular displacement θ, the spring stretches further by $s = r\theta = 0.3\theta$. Thus, the total stretch is $y = y_{st} + 0.3\theta$. Then $F_{sp} = ky = 200(y_{st} + 0.3\theta)$. Referring to the FBD and kinetic diagram of the system, Fig. a,

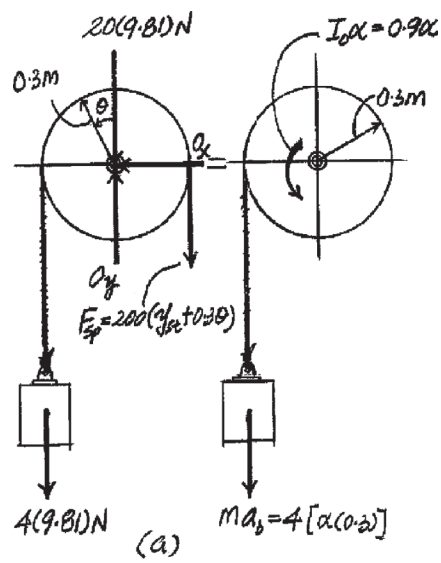

$$\circlearrowleft + \Sigma M_0 = \Sigma(\mu_k)_0; \quad 4(9.81)(0.3) - 200(y_{st} + 0.3\theta)(0.3) = 0.90\alpha + 4[\alpha(0.3)](0.3)$$

$$11.772 - 60y_{st} - 18\theta = 1.26\alpha \qquad \textbf{(1)}$$

When the system is in equilibrium, $\theta = 0°$. Then

$$\circlearrowleft + \Sigma M_0 = 0; \qquad 4(9.81)(0.3) - 200(y_{st})(0.3) = 0$$

$$60y_{st} = 11.772$$

Substitute this result into Eq. (1), we obtain

$$-18\theta = 1.26\alpha$$

$$\alpha + 14.2857\theta = 0$$

Since $\alpha = \ddot{\theta}$, the above equation becomes

$$\ddot{\theta} + 14.2857\theta = 0$$

Comparing to that of standard form, $\omega_n = \sqrt{14.2857} = 3.7796\ \text{rad/s}$.

Thus,

$$\tau = \frac{2\pi}{\omega_n} = \frac{2\pi}{3.7796} = 1.6623\ \text{s} = 1.66\ \text{s} \qquad \textbf{Ans.}$$

Ans:
$\tau = 1.66$ s

Engineering Mechanics Dynamics 14th edition Hibbeler Solutions Manual

© 2016 Pearson Education, Inc., Upper Saddle River, NJ. All rights reserved. This material is protected under all copyright laws as they currently exist. No portion of this material may be reproduced, in any form or by any means, without permission in writing from the publisher.

***22–24.**

The 10-kg disk is pin connected at its mass center. Determine the natural period of vibration of the disk if the springs have sufficient tension in them to prevent the cord from slipping on the disk as it oscillates. *Hint:* Assume that the initial stretch in each spring is δ_O.

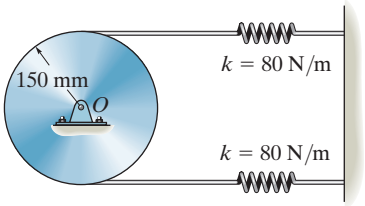

SOLUTION

Equation of Motion. The mass moment of inertia of the disk about its mass center O is $I_0 = \frac{1}{2}Mr^2 = \frac{1}{2}(10)(0.15^2) = 0.1125\ \text{kg}\cdot\text{m}^2$. When the disk undergoes a small angular displacement θ, the top spring stretches further but the stretch of the spring is being reduced both by $s = r\theta = 0.15\theta$. Thus, $(F_{sp})_t = Kx_t = 80(\delta_0 - 0.15\theta)$ and $(F_{sp})_b = 80(\delta_0 - 0.15\theta)$. Referring to the FBD of the disk, Fig. *a*,

$$\circlearrowleft + \Sigma M_0 = I_0\alpha; \qquad -80(\delta_0 + 0.15\theta)(0.15) + 80(\delta_0 - 0.15\theta)(0.15) = 0.1125\alpha$$

$$-3.60\theta = 0.1125\alpha$$

$$\alpha + 32\theta = 0$$

Since $\alpha = \ddot{\theta}$, this equation becomes

$$\ddot{\theta} + 32\theta = 0$$

Comparing to that of standard form, $\omega_n = \sqrt{32}\ \text{rad/s}$. Then

$$\tau = \frac{2\pi}{\omega_n} = \frac{2\pi}{\sqrt{32}} = 1.1107\ \text{s} = 1.11\ \text{s} \qquad \textbf{Ans.}$$

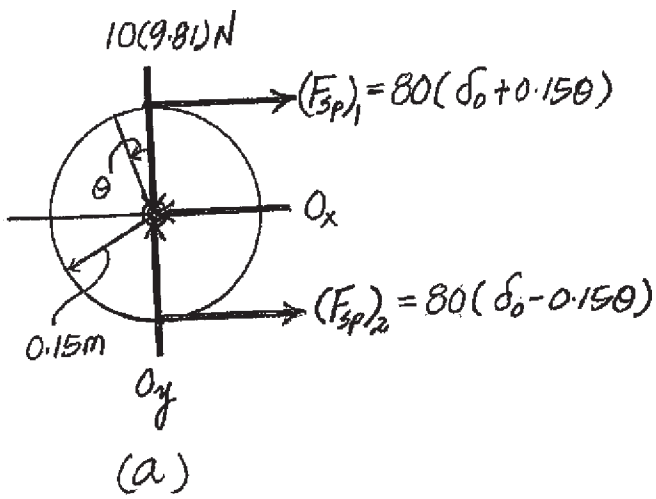

(a)

Ans:
$\tau = 1.11\ \text{s}$

Engineering Mechanics Dynamics 14th edition Hibbeler Solutions Manual

© 2016 Pearson Education, Inc., Upper Saddle River, NJ. All rights reserved. This material is protected under all copyright laws as they currently exist. No portion of this material may be reproduced, in any form or by any means, without permission in writing from the publisher.

22–25.

If the disk in Prob. 22–24 has a mass of 10 kg, determine the natural frequency of vibration. *Hint:* Assume that the initial stretch in each spring is δ_O.

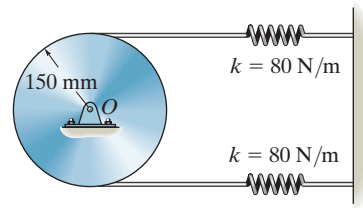

SOLUTION

Equation of Motion. The mass moment of inertia of the disk about its mass center O is $I_0 = \frac{1}{2}mr^2 = \frac{1}{2}(10)(0.15^2) = 0.1125\ \text{kg}\cdot\text{m}^2$ when the disk undergoes a small angular displacement θ, the top spring stretches but the bottom spring compresses, both by $s = r\theta = 0.15\theta$. Thus, $(F_{sp})_t = (F_{sp})_b = ks = 80(0.15\theta) = 12\theta$. Referring to the FBD of the disk, Fig. *a*,

$$\circlearrowleft + \Sigma M_0 = I_0\alpha; \qquad -12\theta(0.3) = 0.1125\alpha$$

$$-3.60\theta = 0.1125\alpha$$

$$\alpha + 32\theta = 0$$

Since $\alpha = \ddot{\theta}$, this equation becomes

$$\ddot{\theta} + 32\theta = 0$$

Comparing to that of Standard form, $\omega_n = \sqrt{32}\ \text{rad/s}$. Then

$$f = \frac{\omega_n}{2\pi} = \frac{\sqrt{32}}{2\pi} = 0.9003\ \text{Hz} = 0.900\ \text{Hz}$$

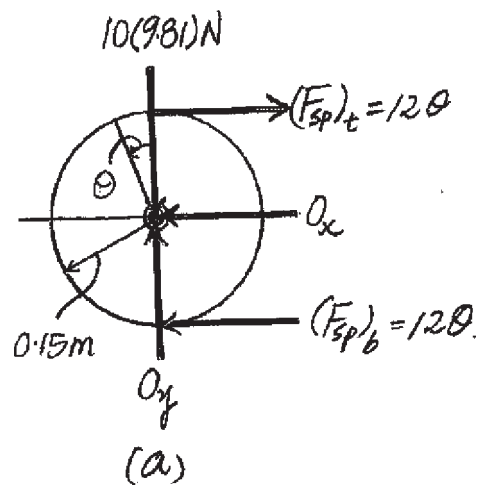

(a)

Ans:
$f = 0.900$ Hz

Engineering Mechanics Dynamics 14th edition Hibbeler Solutions Manual

© 2016 Pearson Education, Inc., Upper Saddle River, NJ. All rights reserved. This material is protected under all copyright laws as they currently exist. No portion of this material may be reproduced, in any form or by any means, without permission in writing from the publisher.

22–26.

A flywheel of mass m, which has a radius of gyration about its center of mass of k_O, is suspended from a circular shaft that has a torsional resistance of $M = C\theta$. If the flywheel is given a small angular displacement of θ and released, determine the natural period of oscillation.

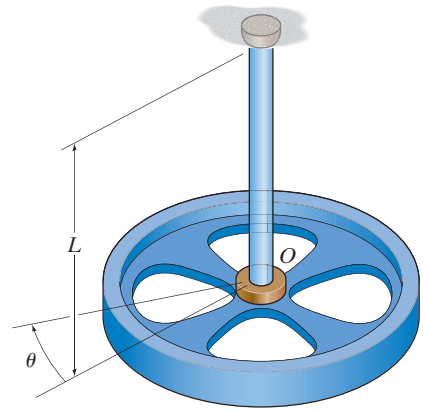

SOLUTION

Equation of Motion: The mass moment of inertia of the wheel about point O is $I_O = mk_O{}^2$. Referring to Fig. a,

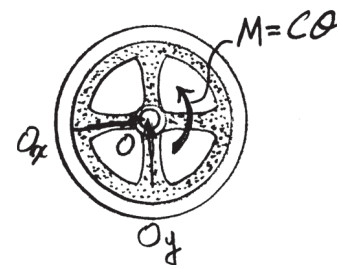

$$\circlearrowleft + \qquad \Sigma M_O = I_O\,\alpha; \qquad -C\theta = mk_O{}^2\ddot{\theta}$$

$$\ddot{\theta} + \frac{C}{mk_O{}^2}\theta = 0$$

Comparing this equation to the standard equation, the natural circular frequency of the wheel is

$$\omega_n = \sqrt{\frac{C}{mk_O{}^2}} = \frac{1}{k_O}\sqrt{\frac{C}{m}}$$

Thus, the natural period of the oscillation is

$$\tau = \frac{2\pi}{\omega_n} = 2\pi k_O\sqrt{\frac{m}{C}} \qquad \textbf{Ans.}$$

Ans:

$\tau = 2\pi k_O\sqrt{\frac{m}{C}}$

Engineering Mechanics Dynamics 14th edition Hibbeler Solutions Manual

© 2016 Pearson Education, Inc., Upper Saddle River, NJ. All rights reserved. This material is protected under all copyright laws as they currently exist. No portion of this material may be reproduced, in any form or by any means, without permission in writing from the publisher.

22–27.

The 6-lb weight is attached to the rods of negligible mass. Determine the natural frequency of vibration of the weight when it is displaced slightly from the equilibrium position and released.

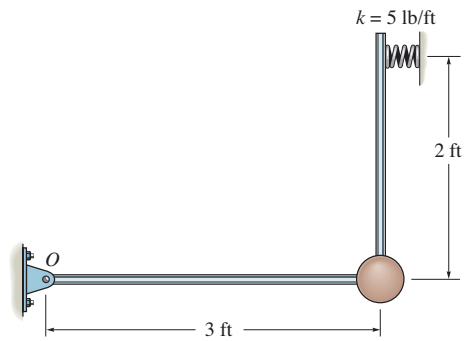

SOLUTION

T_O is the equilibrium force.

$$T_O = \frac{6(3)}{2} = 9 \text{ lb}$$

Thus, for small θ,

$$\circlearrowleft + \Sigma M_O = I_O\,\alpha; \qquad 6(3) - \left[9 + 5(2)\theta\right](2) = \left(\frac{6}{32.2}\right)\left(3\ddot{\theta}\right)(3)$$

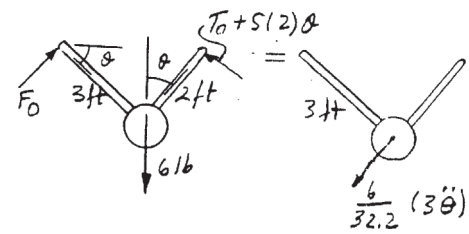

Thus,

$$\ddot{\theta} + 11.926\theta = 0$$

$$\omega_n = \sqrt{11.926} = 3.45 \text{ rad/s}$$ **Ans.**

Ans:
$\omega_n = 3.45$ rad/s

Engineering Mechanics Dynamics 14th edition Hibbeler Solutions Manual

© 2016 Pearson Education, Inc., Upper Saddle River, NJ. All rights reserved. This material is protected under all copyright laws as they currently exist. No portion of this material may be reproduced, in any form or by any means, without permission in writing from the publisher.

***22–28.**

The platform AB when empty has a mass of 400 kg, center of mass at G_1, and natural period of oscillation $\tau_1 = 2.38$ s. If a car, having a mass of 1.2 Mg and center of mass at G_2, is placed on the platform, the natural period of oscillation becomes $\tau_2 = 3.16$ s. Determine the moment of inertia of the car about an axis passing through G_2.

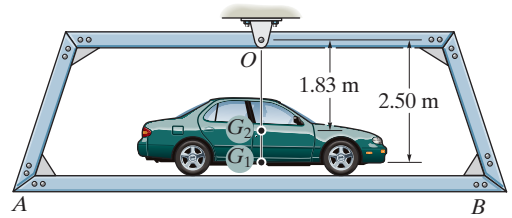

SOLUTION

Free-body Diagram: When an object arbitrary shape having a mass m is pinned at O and being displaced by an angular displacement of θ, the tangential component of its weight will create the *restoring moment* about point O.

Equation of Motion: Sum moment about point O to eliminate O_x and O_y.

$$\circlearrowleft + \Sigma M_O = I_O\alpha: \qquad -mg\sin\theta(l) = I_O\alpha \qquad \textbf{(1)}$$

Kinematics: Since $\alpha = \dfrac{d^2\theta}{dt^2} = \ddot{\theta}$ and $\sin\theta = \theta$ if θ is small, then substituting these values into Eq. (1), we have

$$-mgl\theta = I_O\ddot{\theta} \qquad \text{or} \qquad \ddot{\theta} + \frac{mgl}{I_O}\theta = 0 \qquad \textbf{(2)}$$

From Eq. (2), $\omega_n^2 = \dfrac{mgl}{I_O}$, thus, $\omega_n = \sqrt{\dfrac{mgl}{I_O}}$, Applying Eq. 22–12, we have

$$\tau = \frac{2\pi}{\omega_n} = 2\pi\sqrt{\frac{I_O}{mgl}} \qquad \textbf{(3)}$$

When the platform is empty, $\tau = \tau_1 = 2.38$ s, $m = 400$ kg and $l = 2.50$ m. Substituting these values into Eq. (3), we have

$$2.38 = 2\pi\sqrt{\frac{(I_O)_p}{400(9.81)(2.50)}} \qquad (I_O)_p = 1407.55\ \text{kg}\cdot\text{m}^2$$

When the car is on the platform, $\tau = \tau_2 = 3.16$ s, $m = 400$ kg $+ 1200$ kg $= 1600$ kg. $l = \dfrac{2.50(400) + 1.83(1200)}{1600} = 1.9975$ m and $I_O = (I_O)_C + (I_O)_p = (I_O)_C + 1407.55$. Substituting these values into Eq. (3), we have

$$3.16 = 2\pi\sqrt{\frac{(I_O)_C + 1407.55}{1600(9.81)(1.9975)}} \qquad (I_O)_C = 6522.76\ \text{kg}\cdot\text{m}^2$$

Thus, the mass moment inertia of the car about its mass center is

$$(I_G)_C = (I_O)_C - m_C d^2$$

$$= 6522.76 - 1200(1.83^2) = 2.50(10^3)\ \text{kg}\cdot\text{m}^2 \qquad \textbf{Ans.}$$

Ans:
$(I_G)_C = 2.50(10^3)\ \text{kg}\cdot\text{m}^2$

Engineering Mechanics Dynamics 14th edition Hibbeler Solutions Manual

© 2016 Pearson Education, Inc., Upper Saddle River, NJ. All rights reserved. This material is protected under all copyright laws as they currently exist. No portion of this material may be reproduced, in any form or by any means, without permission in writing from the publisher.

22–29.

The plate of mass m is supported by three symmetrically placed cords of length l as shown. If the plate is given a slight rotation about a vertical axis through its center and released, determine the natural period of oscillation.

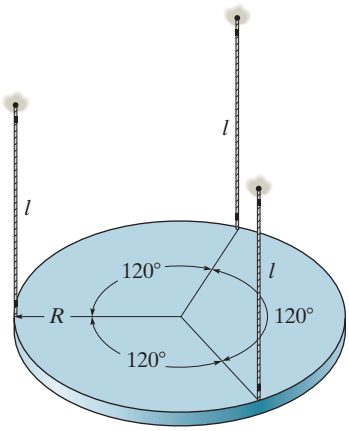

SOLUTION

$$\Sigma M_z = I_z\alpha \qquad -3(T\sin\phi)R = \frac{1}{2}mR^2\ddot{\theta}$$

$$\sin\phi \equiv \phi$$

$$\ddot{\theta} + \frac{6T}{Rm}\phi = 0$$

$$\Sigma F_z = 0 \qquad 3T\cos\phi - mg = 0$$

$$\phi = 0, \qquad T = \frac{mg}{3}, \qquad \phi = \frac{R}{l}\theta$$

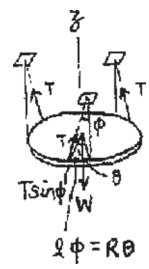

$$\ddot{\theta} + \frac{6}{Rm}\left(\frac{mg}{3}\right)\left(\frac{R}{l}\theta\right) = 0$$

$$\ddot{\theta} + \frac{2g}{l}\theta = 0$$

$$\tau = \frac{2\pi}{\omega_n} = 2\pi\sqrt{\frac{l}{2g}} \qquad \textbf{Ans.}$$

Ans:

$$\tau = 2\pi\sqrt{\frac{l}{2g}}$$

Engineering Mechanics Dynamics 14th edition Hibbeler Solutions Manual

© 2016 Pearson Education, Inc., Upper Saddle River, NJ. All rights reserved. This material is protected under all copyright laws as they currently exist. No portion of this material may be reproduced, in any form or by any means, without permission in writing from the publisher.

22–30.

Determine the differential equation of motion of the 3-kg block when it is displaced slightly and released. The surface is smooth and the springs are originally unstretched.

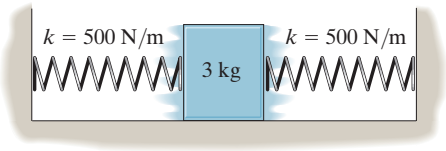

SOLUTION

$$T + V = \text{const.}$$

$$T = \frac{1}{2}(3)\dot{x}^2$$

$$V = \frac{1}{2}(500)x^2 + \frac{1}{2}(500)x^2$$

$$T + V = 1.5\dot{x}^2 + 500x^2$$

$$1.5(2\dot{x})\,\ddot{x} + 1000x\dot{x} = 0$$

$$3\ddot{x} + 1000x = 0$$

$$\ddot{x} + 333x = 0 \qquad \textbf{Ans.}$$

Ans:
$\ddot{x} + 333x = 0$

Engineering Mechanics Dynamics 14th edition Hibbeler Solutions Manual

© 2016 Pearson Education, Inc., Upper Saddle River, NJ. All rights reserved. This material is protected under all copyright laws as they currently exist. No portion of this material may be reproduced, in any form or by any means, without permission in writing from the publisher.

22–31.

Determine the natural period of vibration of the pendulum. Consider the two rods to be slender, each having a weight of 8 lb/ft.

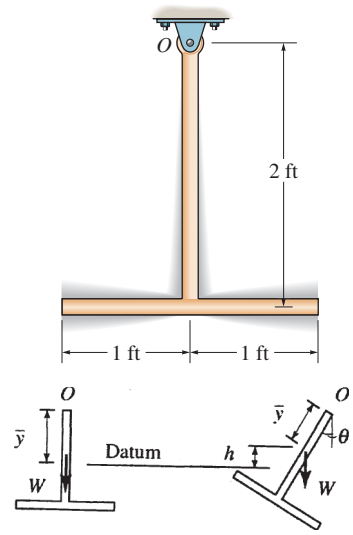

SOLUTION

$$\bar{y} = \frac{1(8)(2) + 2(8)(2)}{8(2) + 8(2)} = 1.5 \text{ ft}$$

$$I_O = \frac{1}{32.2}\left[\frac{1}{12}(2)(8)(2)^2 + 2(8)(1)^2\right]$$

$$+ \frac{1}{32.2}\left[\frac{1}{12}(2)(8)(2)^2 + 2(8)(2)^2\right] = 2.8157 \text{ slug} \cdot \text{ft}^2$$

$$h = \bar{y}\,(1 - \cos\theta)$$

$$T + V = \text{const}$$

$$T = \frac{1}{2}(2.8157)(\dot{\theta})^2 = 1.4079\,\dot{\theta}^2$$

$$V = 8(4)(1.5)(1 - \cos\theta) = 48(1 - \cos\theta)$$

$$T + V = 1.4079\dot{\theta}^2 + 48(1 - \cos\theta)$$

$$1.4079\,(2\dot{\theta})\ddot{\theta} + 48(\sin\theta)\dot{\theta} = 0$$

For small θ, $\sin\theta = \theta$, then

$$\ddot{\theta} + 17.047\theta = 0$$

$$\tau = \frac{2\pi}{\omega_n} = \frac{2\pi}{\sqrt{17.047}} = 1.52 \text{ s} \qquad \textbf{Ans.}$$

Ans:
$\tau = 1.52$ s

Engineering Mechanics Dynamics 14th edition Hibbeler Solutions Manual

© 2016 Pearson Education, Inc., Upper Saddle River, NJ. All rights reserved. This material is protected under all copyright laws as they currently exist. No portion of this material may be reproduced, in any form or by any means, without permission in writing from the publisher.

***22–32.**

Determine the natural period of vibration of the 10-lb semicircular disk.

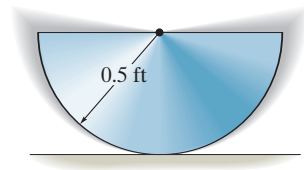

SOLUTION

Datum at initial level of center of gravity of disk.

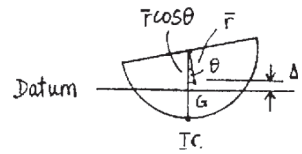

$$\Delta = \bar{r}(1 - \cos\theta)$$

$$E = T + V$$

$$= \frac{1}{2}I_{IC}(\dot{\theta})^2 + W\bar{r}(1 - \cos\theta)$$

$$\dot{E} = \dot{\theta}(I_{IC}\ddot{\theta} + W\bar{r}\sin\theta) = 0$$

For small θ, $\sin\theta = \theta$

$$\ddot{\theta} + \frac{W\bar{r}}{I_{IC}}\theta = 0$$

$$\bar{r} = \frac{4(0.5)}{3\pi} = 0.212 \text{ ft}$$

$$I_A = I_G + m\bar{r}^2$$

$$\frac{1}{2}\left(\frac{10}{32.2}\right)(0.5)^2 = I_G + \frac{10}{32.2}(0.212)^2$$

$$I_G = 0.02483 \text{ slug}\cdot\text{ft}^2$$

$$I_{IC} = I_G + m(r - \bar{r})^2$$

$$= 0.02483 + \frac{10}{32.2}(0.5 - 0.212)^2$$

$$= 0.05056 \text{ slug}\cdot\text{ft}^2$$

$$\tau = \frac{2\pi}{\omega_n} = 2\pi\sqrt{\frac{I_{IC}}{W\bar{r}}} = 2\pi\sqrt{\frac{0.05056}{10(0.212)}}$$

$$\tau = 0.970 \text{ s}$$ **Ans.**

Ans:
$\tau = 0.970$ s

Engineering Mechanics Dynamics 14th edition Hibbeler Solutions Manual

© 2016 Pearson Education, Inc., Upper Saddle River, NJ. All rights reserved. This material is protected under all copyright laws as they currently exist. No portion of this material may be reproduced, in any form or by any means, without permission in writing from the publisher.

22–33.

If the 20-kg wheel is displaced a small amount and released, determine the natural period of vibration. The radius of gyration of the wheel is $k_G = 0.36$ m. The wheel rolls without slipping.

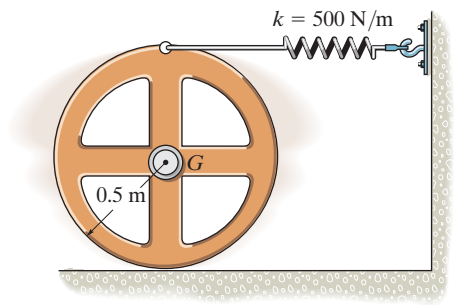

SOLUTION

Energy Equation. The mass moment of inertia of the wheel about its mass center is $I_G = mk_G = 20(0.361)^2 = 2.592\ \text{kg}\cdot\text{m}^2$. Since the wheel rolls without slipping, $v_G = \omega r = \omega(0.5)$. Thus,

$$T = \frac{1}{2}I_G\omega^2 + \frac{1}{2}mv_G^2$$

$$= \frac{1}{2}(2.592)\omega^2 + \frac{1}{2}(20)[\omega(0.5)]^2$$

$$= 3.796\,\omega^2 = 3.796\dot{\theta}^2$$

When the disk undergoes a small angular displacement θ, the spring stretches $s = \theta(1) = \theta$, Fig. *a*. Thus, the elastic potential energy is

$$V_e = \frac{1}{2}ks^2 = \frac{1}{2}(500)\theta^2 = 250\theta^2$$

Thus, the total energy is

$$E = T + V = 3.796\dot{\theta}^2 + 250\theta^2$$

Time Derivative. Taking the time derivative of the above equation,

$$7.592\dot{\theta}\ddot{\theta} + 500\theta\dot{\theta} = 0$$

$$\dot{\theta}(7.592\ddot{\theta} + 500\theta) = 0$$

Since $\dot{\theta} \neq 0$, then

$$7.592\ddot{\theta} + 500\theta = 0$$

$$\ddot{\theta} + 65.8588\theta = 0$$

Comparing to that of standard form, $\omega_n = \sqrt{65.8588} = 8.1153\ \text{rad/s}$. Thus,

$$\tau = \frac{2\pi}{\omega_n} = \frac{2\pi}{8.1153} = 0.7742\ \text{s} = 0.774\ \text{s} \qquad \textbf{Ans.}$$

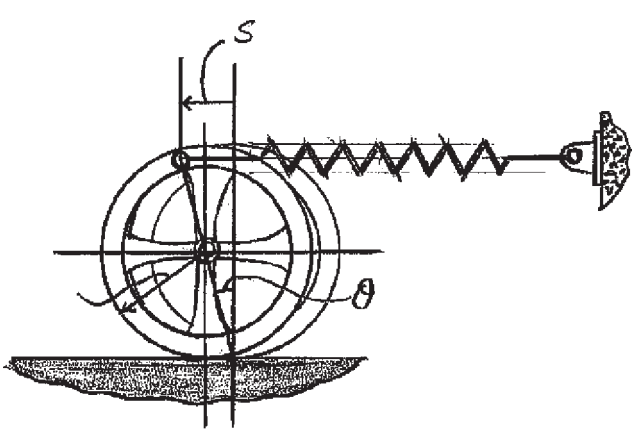

(a)

Ans:
$\tau = 0.774$ s

Engineering Mechanics Dynamics 14th edition Hibbeler Solutions Manual

© 2016 Pearson Education, Inc., Upper Saddle River, NJ. All rights reserved. This material is protected under all copyright laws as they currently exist. No portion of this material may be reproduced, in any form or by any means, without permission in writing from the publisher.

22–34.

Determine the differential equation of motion of the 3-kg spool. Assume that it does not slip at the surface of contact as it oscillates. The radius of gyration of the spool about its center of mass is $k_G = 125$ mm.

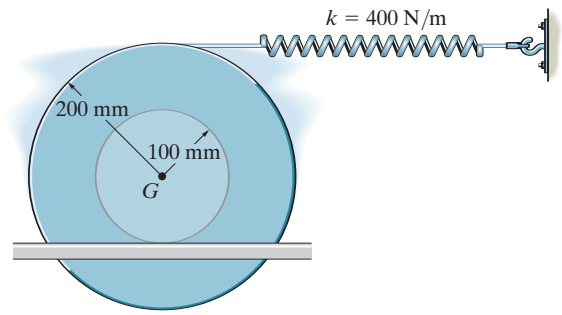

SOLUTION

Kinematics: Since no slipping occurs, $s_G = 0.1\theta$ hence $s_F = \frac{0.3}{0.1}S_G = 0.3\theta$. Also,

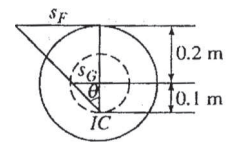

$$v_G = 0.1\dot{\theta}.$$

$$E = T + V$$

$$E = \frac{1}{2}[(3)(0.125)^2]\dot{\theta}^2 + \frac{1}{2}(3)(0.1\theta)^2 + \frac{1}{2}(400)(0.3\theta)^2 = \text{const.}$$

$$= 0.03844\dot{\theta}^2 + 18\theta^2$$

$$0.076875\dot{\theta}\ddot{\theta} + 36\theta\dot{\theta} = 0$$

$$0.076875\dot{\theta}(\ddot{\theta} + 468.29\theta) = 0 \text{ Since } 0.076875\theta \neq 0$$

$$\ddot{\theta} + 468\theta = 0 \qquad \textbf{Ans.}$$

Ans:
$\ddot{\theta} + 468\theta = 0$

Engineering Mechanics Dynamics 14th edition Hibbeler Solutions Manual

© 2016 Pearson Education, Inc., Upper Saddle River, NJ. All rights reserved. This material is protected under all copyright laws as they currently exist. No portion of this material may be reproduced, in any form or by any means, without permission in writing from the publisher.

22–35.

Determine the natural period of vibration of the 3-kg sphere. Neglect the mass of the rod and the size of the sphere.

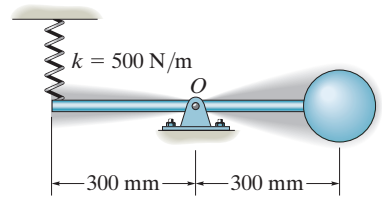

SOLUTION

$$E = T + V$$

$$= \frac{1}{2}(3)(0.3\dot{\theta})^2 + \frac{1}{2}(500)(\delta_{st} + 0.3\theta)^2 - 3(9.81)(0.3\theta)$$

$$E = \dot{\theta}[(3(0.3)^2\ddot{\theta} + 500(\delta_{st} + 0.3\theta)(0.3) - 3(9.81)(0.3)] = 0$$

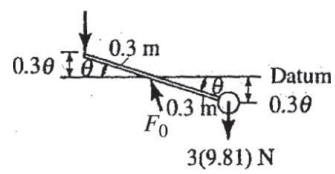

By statics,

$$T(0.3) = 3(9.81)(0.3)$$

$$T = 3(9.81)\text{ N}$$

$$\delta_{st} = \frac{3(9.81)}{500}$$

Thus,

$$3(0.3)^2\ddot{\theta} + 500(0.3)^2\theta = 0$$

$$\ddot{\theta} + 166.67\theta = 0$$

$$\omega_n = \sqrt{166.67} = 12.91\text{ rad/s}$$

$$\tau = \frac{2\pi}{\omega_n} = \frac{2\pi}{12.91} = 0.487\text{ s}$$ **Ans.**

Ans:
$\tau = 0.487$ s

Engineering Mechanics Dynamics 14th edition Hibbeler Solutions Manual

© 2016 Pearson Education, Inc., Upper Saddle River, NJ. All rights reserved. This material is protected under all copyright laws as they currently exist. No portion of this material may be reproduced, in any form or by any means, without permission in writing from the publisher.

***22–36.**

If the lower end of the 6-kg slender rod is displaced a small amount and released from rest, determine the natural frequency of vibration. Each spring has a stiffness of $k = 200\ \text{N/m}$ and is unstretched when the rod is hanging vertically.

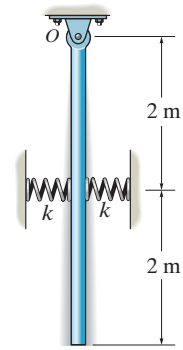

SOLUTION

Energy Equation. The mass moment of inertia of the rod about O is $I_0 = \frac{1}{3}ml^2 = \frac{1}{3}(6)(4^2) = 32\ \text{kg}\cdot\text{m}^2$. Thus, the Kinetic energy is

$$T = \frac{1}{2}I_0\omega^2 = \frac{1}{2}(32)\dot{\theta}^2 = 16\dot{\theta}^2$$

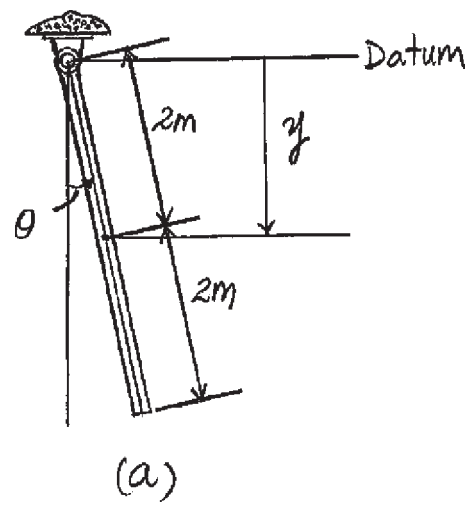

with reference to the datum set in Fig. a, the gravitational potential energy is

$$V_g = mgy = 6(9.81)(-2\cos\theta) = -117.72\cos\theta$$

When the rod undergoes a small angular displacement θ the spring deform $x = 2\sin\Omega$. Thus the elastic potential energy is

$$V_e = 2\left(\frac{1}{2}kx^2\right) = 2\left[\frac{1}{2}(200)(2\sin\theta)^2\right] = 800\sin^2\theta$$

Thus, the total energy is

$$E = T + V = 16\dot{\theta}^2 + 800\sin^2\theta - 117.72\cos\theta$$

Time Derivative. Taking the first time derivative of the above equation

$$32\dot{\theta}\ddot{\theta} + 1600(\sin\theta\cos\theta)\dot{\theta} + 117.72(\sin\theta)\dot{\theta} = 0$$

Using the trigonometry identity $\sin 2\theta = 2\sin\theta\cos\theta$, we obtain

$$32\dot{\theta}\ddot{\theta} + 800(\sin 2\theta)\dot{\theta} + 117.72(\sin\theta)\dot{\theta} = 0$$

$$\dot{\theta}(32\ddot{\theta} + 800\sin 2\theta + 117.72\sin\theta) = 0$$

Since $\dot{\theta} \neq 0$,

$$32\ddot{\theta} + 800\sin 2\theta + 117.72\sin\theta) = 0$$

Since θ is small, $\sin 2\theta \simeq 2\theta$ and $\sin\theta = \theta$. The above equation becomes

$$32\ddot{\theta} + 1717.72\theta = 0$$

$$\ddot{\theta} + 53.67875\theta = 0$$

Comparing to that of standard form, $\omega_n = \sqrt{53.67875} = 7.3266\ \text{rad/s}$.

Thus,

$$f = \frac{\omega_n}{2\pi} = \frac{7.3266}{2\pi} = 1.1661\ \text{Hz} = 1.17\ \text{Hz} \qquad \textbf{Ans.}$$

Ans:
$f = 1.17\ \text{Hz}$

Engineering Mechanics Dynamics 14th edition Hibbeler Solutions Manual

© 2016 Pearson Education, Inc., Upper Saddle River, NJ. All rights reserved. This material is protected under all copyright laws as they currently exist. No portion of this material may be reproduced, in any form or by any means, without permission in writing from the publisher.

22–37.

The disk has a weight of 30 lb and rolls without slipping on the horizontal surface as it oscillates about its equilibrium position. If the disk is displaced, by rolling it counterclockwise 0.2 rad, determine the equation which describes its oscillatory motion and the natural period when it is released.

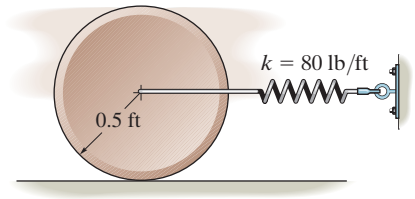

SOLUTION

Energy Equation. The mass moment of inertia of the disk about its center of gravity is $I_G = \frac{1}{2}mr^2 = \frac{1}{2}\left(\frac{30}{32.2}\right)(0.5^2) = 0.11646 \text{ slug}\cdot\text{ft}^2$. Since the disk rolls without slipping, $v_G = \omega r = \omega(0.5)$. Thus

$$T = \frac{1}{2}I_G\omega^2 + \frac{1}{2}mv_G^2$$

$$= \frac{1}{2}(0.1146)\,\omega^2 + \frac{1}{2}\left(\frac{30}{32.2}\right)[\omega(0.5)]^2$$

$$= 0.17469\,\omega^2 = 0.17469\dot{\theta}^2$$

When the disk undergoes a small angular displacement θ the spring stretches $s = \theta r = \theta(0.5)$, Fig. *a*. Thus, the elastic potential energy is

$$V_e = \frac{1}{2}ks^2 = \frac{1}{2}(80)[\theta(0.5)]^2 = 10\theta^2$$

Thus, the total energy is

$$E = T + V = 0.17469\dot{\theta}^2 + 10\theta^2$$

$$E = 0.175\dot{\theta}^2 + 10\theta^2 \qquad \textbf{Ans.}$$

Time Derivative. Taking the time derivative of the above equation,

$$0.34938\dot{\theta}\ddot{\theta} + 20\theta\dot{\theta} = 0$$

$$\dot{\theta}(0.34938\ddot{\theta} + 20\theta) = 0$$

Since $\dot{\theta} \neq 0$, then

$$0.34938\dot{\theta} + 20\theta = 0$$

$$\ddot{\theta} + 57.244\theta = 0$$

$$\ddot{\theta} = 57.2\theta = 0 \qquad \textbf{Ans.}$$

Comparing to that of standard form,

$\omega_n = \sqrt{57.2444} = 7.5660 \text{ rad/s}$.

Thus

$$\tau = \frac{2\pi}{\omega_n} = \frac{2\pi}{7.5660} = 0.8304 \text{ s} = 0.830 \text{ s} \qquad \textbf{Ans.}$$

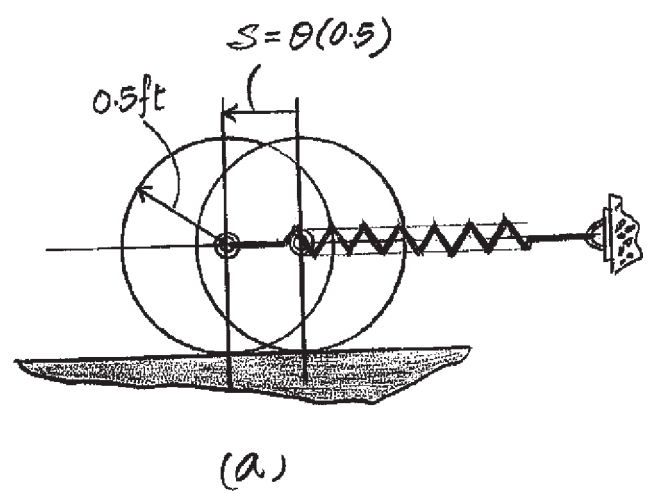

Ans:
$E = 0.175\dot{\theta}^2 + 10\,\theta^2$
$\tau = 0.830$ s

Engineering Mechanics Dynamics 14th edition Hibbeler Solutions Manual

© 2016 Pearson Education, Inc., Upper Saddle River, NJ. All rights reserved. This material is protected under all copyright laws as they currently exist. No portion of this material may be reproduced, in any form or by any means, without permission in writing from the publisher.

22–38.

The machine has a mass m and is uniformly supported by *four* springs, each having a stiffness k. Determine the natural period of vertical vibration.

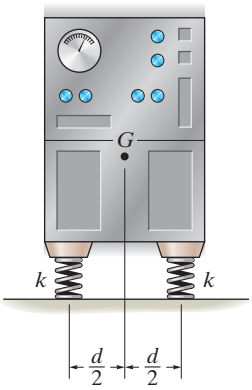

SOLUTION

$$T + V = \text{const.}$$

$$T = \frac{1}{2} m(\dot{y})^2$$

$$V = m\,g\,y + \frac{1}{2}(4k)(\Delta s - y)^2$$

$$T + V = \frac{1}{2} m(\dot{y})^2 + m\,g\,y + \frac{1}{2}(4k)(\Delta s - y)^2$$

$$m\,\dot{y}\,\ddot{y} + m\,g\,\dot{y} - 4k(\Delta s - y)\dot{y} = 0$$

$$m\,\ddot{y} + m\,g + 4ky - 4k\Delta s = 0$$

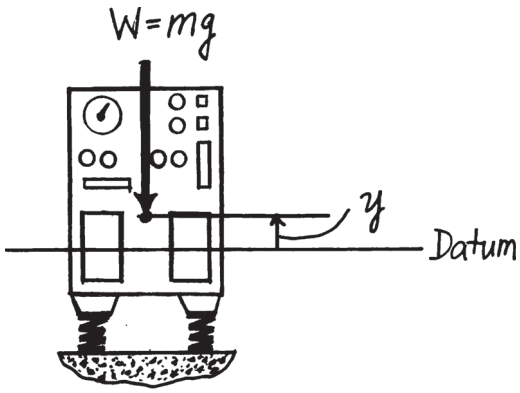

Since $\Delta s = \dfrac{mg}{4k}$

Then

$$m\ddot{y} + 4ky = 0$$

$$y + \frac{4k}{m} y = 0$$

$$\omega_n = \sqrt{\frac{4k}{m}}$$

$$\tau = \frac{2\pi}{\omega_n} = \pi\sqrt{\frac{m}{k}}$$ **Ans.**

Ans:
$\tau = \pi\sqrt{\dfrac{m}{k}}$

Engineering Mechanics Dynamics 14th edition Hibbeler Solutions Manual

© 2016 Pearson Education, Inc., Upper Saddle River, NJ. All rights reserved. This material is protected under all copyright laws as they currently exist. No portion of this material may be reproduced, in any form or by any means, without permission in writing from the publisher.

22–39.

The slender rod has a weight of 4 lb/ft. If it is supported in the horizontal plane by a ball-and-socket joint at A and a cable at B, determine the natural frequency of vibration when the end B is given a small horizontal displacement and then released.

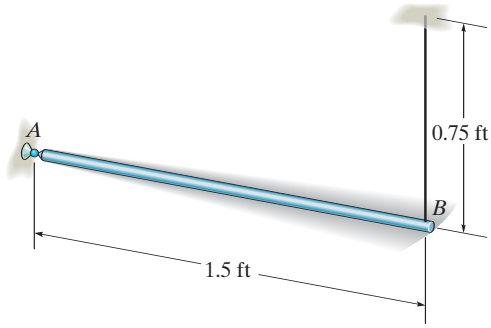

SOLUTION

$$\phi = \frac{1.5\theta_{max}}{0.75}$$

$$\Delta = 0.75(1 - \cos\phi)$$

$$\cong 0.75(1 - 1 + \frac{\phi^2}{2})$$

$$= 0.75(\frac{4\theta_{max}^2}{2})$$

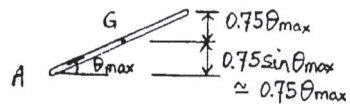

$$\Delta G = \frac{1}{2}\Delta = 0.75\theta_{max}^2$$

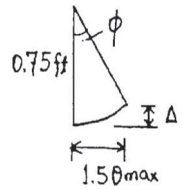

$$T_{max} = \frac{1}{2} I_A \omega_{max}^2$$

$$= \frac{1}{2}[\frac{1}{3}(\frac{4(1.5)}{32.2})(1.5)^2]\omega_n^2\theta_{max}^2$$

$$= 0.0699\,\omega_n^2\theta_{max}^2$$

$$V_{max} = W\Delta_G = 4(1.5)(0.75\theta_{max}^2)$$

$$T_{max} = V_{max}$$

$$0.0699\omega_n^2\theta_{max}^2 = 4.5\,\theta_{max}^2$$

$$\omega_n^2 = 64.40$$

$$\omega_n = 8.025 \text{ rad/s}$$

$$f = \frac{\omega_n}{2\pi} = \frac{8.025}{2\pi} = 1.28 \text{ Hz}$$ **Ans.**

Ans:
$f = 1.28$ Hz

Engineering Mechanics Dynamics 14th edition Hibbeler Solutions Manual

© 2016 Pearson Education, Inc., Upper Saddle River, NJ. All rights reserved. This material is protected under all copyright laws as they currently exist. No portion of this material may be reproduced, in any form or by any means, without permission in writing from the publisher.

***22–40.**

If the slender rod has a weight of 5 lb, determine the natural frequency of vibration. The springs are originally unstretched.

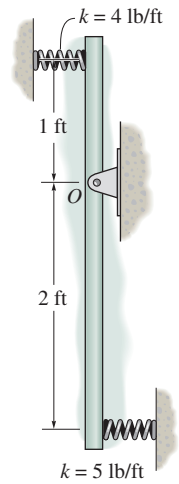

SOLUTION

***Energy Equation*:** When the rod is being displaced a small angular displacement of θ, the compression of the spring at its ends can be approximated as $x_1 = 2\theta$ and $x_2 = 1\theta$. Thus, the elastic potential energy when the rod is at this position is $V_e = \frac{1}{2}k_1 x_1^2 + \frac{1}{2}k_2 x_2 = \frac{1}{2}(5)(2\theta)^2 + \frac{1}{2}(4)(1\theta)^2 = 12\theta^2$. The datum is set at the rod's mass center when the rod is at its original position. When the rod undergoes a small angular displacement θ, its mass center is $0.5(1 - \cos\theta)$ ft *above* the datum hence its gravitational potential energy is $V_g = 5[0.5(1 - \cos\theta)]$. Since θ is small, $\cos\theta$ can be approximated by the first two terms of the power series, that is, $\cos\theta = 1 - \frac{\theta^2}{2}$. Thus, $V_g = 2.5\left[1 - \left(1 - \frac{\theta^2}{2}\right)\right] = 1.25\theta^2$

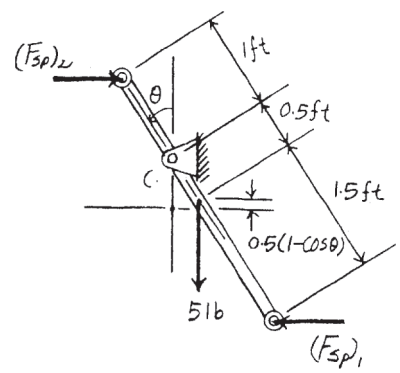

$$V = V_e + V_g = 12\theta^2 + 1.25\theta^2 = 13.25\theta^2$$

The mass moment inertia of the rod about point O is $I_O = \frac{1}{12}\left(\frac{5}{32.2}\right)(3^2) + \frac{5}{32.2}(0.5^2) = 0.1553 \text{ slug}\cdot\text{ft}^2$. The kinetic energy is

$$T = \frac{1}{2}I_O\,\omega^2 = \frac{1}{2}(0.1553)\,\dot{\theta}^2 = 0.07764\dot{\theta}^2$$

The total energy of the system is

$$U = T + V = 0.07764\dot{\theta}^2 + 13.25\theta^2 \qquad \textbf{[1]}$$

***Time Derivative*:** Taking the time derivative of Eq.[1], we have

$$0.1553\dot{\theta}\ddot{\theta} + 26.5\theta\dot{\theta} = 0$$

$$\dot{\theta}\left(0.1553\ddot{\theta} + 26.5\theta\right) = 0$$

Since $\dot{\theta} \neq 0$, then

$$0.1553\ddot{\theta} + 26.5\theta = 0$$

$$\ddot{\theta} + 170.66\theta = 0 \qquad \textbf{[2]}$$

From Eq.[2], $p^2 = 170.66$, thus, $p = 13.06$ rad/s. Applying Eq.22–14, we have

$$f = \frac{p}{2\pi} = \frac{13.06}{2\pi} = 2.08 \text{ Hz} \qquad \textbf{Ans.}$$

Ans:
$f = 2.08$ Hz

Engineering Mechanics Dynamics 14th edition Hibbeler Solutions Manual

© 2016 Pearson Education, Inc., Upper Saddle River, NJ. All rights reserved. This material is protected under all copyright laws as they currently exist. No portion of this material may be reproduced, in any form or by any means, without permission in writing from the publisher.

22–41.

If the block-and-spring model is subjected to the periodic force $F = F_0 \cos \omega t$, show that the differential equation of motion is $\ddot{x} + (k/m)x = (F_0/m) \cos \omega t$, where x is measured from the equilibrium position of the block. What is the general solution of this equation?

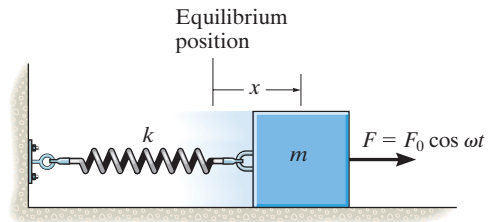

SOLUTION

$\xrightarrow{+} \Sigma F_x = ma_x; \qquad F_0 \cos \omega t - kx = m\ddot{x}$

$$\ddot{x} + \frac{k}{m}x = \frac{F_0}{m} \cos \omega t \qquad \textbf{(Q.E.D.)}$$

$$\ddot{x} + p^2 x = \frac{F_0}{m} \cos \omega t \qquad \text{Where } p = \sqrt{\frac{k}{m}} \qquad \textbf{(1)}$$

The general solution of the above differential equation is of the form of $x = x_c + x_p$.

The complementary solution:

$x_c = A \sin pt + B \cos pt$

The particular solution:

$s_p = .C \cos \omega t$ **(2)**

$\ddot{x}_P = -C\omega^2 \cos \omega t$ **(3)**

Substitute Eqs. (2) and (3) into (1) yields:

$$-C\omega^2 \cos \omega t + p^2 (C \cos \omega t) = \frac{F_0}{m} \cos \omega t$$

$$C = \frac{\frac{F_0}{m}}{p^2 - \omega^2} = \frac{F_0/k}{1 - \left(\frac{\omega}{p}\right)^2}$$

The general solution is therefore

$$s = A \sin pt + B \cos pt + \frac{F_0/k}{1 - \left(\frac{\omega}{p}\right)^2} \cos \omega t \qquad \textbf{Ans.}$$

The constants A and B can be found from the initial conditions.

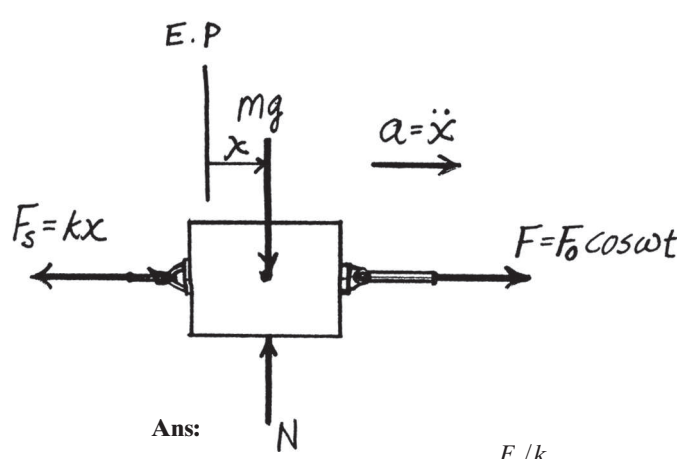

Ans:

$$x = A \sin \omega_n t + B \cos \omega_n t + \frac{F_o/k}{1 - (\omega/\omega_n)^2} \cos \omega t$$

Engineering Mechanics Dynamics 14th edition Hibbeler Solutions Manual

© 2016 Pearson Education, Inc., Upper Saddle River, NJ. All rights reserved. This material is protected under all copyright laws as they currently exist. No portion of this material may be reproduced, in any form or by any means, without permission in writing from the publisher.

22–42.

A block which has a mass m is suspended from a spring having a stiffness k. If an impressed downward vertical force $F = F_O$ acts on the weight, determine the equation which describes the position of the block as a function of time.

SOLUTION

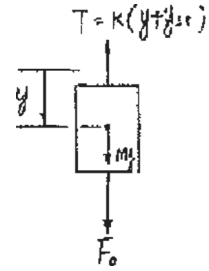

$+\uparrow \Sigma F_y = ma_y;\qquad k(y_{st} + y) - mg - F_0 = -m\ddot{y}$

$$m\ddot{y} + ky + ky_{st} - mg = F_0$$

However, from equilbrium $ky_{st} - mg = 0$, therefore

$m\ddot{y} + ky = F_0$

$$\ddot{y} + \frac{k}{m}y = \frac{F_0}{m} \qquad \text{where } \omega_n = \sqrt{\frac{k}{m}}$$

$$\ddot{y} + \omega_n^2 y = \frac{F_0}{m} \qquad \textbf{[1]}$$

The general solution of the above differential equation is of the form of $y = y_c + y_p$.

$y_c = A \sin \omega_n t + B \cos \omega_n t$

$$y_P = C \qquad \textbf{[2]}$$

$$\ddot{y}_P = 0 \qquad \textbf{[3]}$$

Substitute Eqs. [2] and [3] into [1] yields :

$$0 + \omega_n^2 C = \frac{F_0}{m} \qquad C = \frac{F_0}{mp^2} = \frac{F_0}{k}$$

The general solution is therefore

$$y = A \sin \omega_n t + B \cos \omega_n t + \frac{F_0}{k} \qquad \textbf{Ans.}$$

The constants A and B can be found from the initial conditions.

Ans:

$$y = A \sin \omega_n t + B \cos \omega_n t + \frac{F_O}{k}$$

Engineering Mechanics Dynamics 14th edition Hibbeler Solutions Manual

© 2016 Pearson Education, Inc., Upper Saddle River, NJ. All rights reserved. This material is protected under all copyright laws as they currently exist. No portion of this material may be reproduced, in any form or by any means, without permission in writing from the publisher.

22–43.

A 4-lb weight is attached to a spring having a stiffness $k = 10$ lb/ft. The weight is drawn downward a distance of 4 in. and released from rest. If the support moves with a vertical displacement $\delta = (0.5 \sin 4t)$ in., where t is in seconds, determine the equation which describes the position of the weight as a function of time.

SOLUTION

$$y = A \sin \omega_n t + B \cos \omega_n t + \frac{\delta_0}{1 - \left(\frac{\omega_0}{\omega_n}\right)^2} \sin \omega_0 t$$

$$v = \dot{y} = A\omega_n \cos \omega_n t - B\omega_n \sin \omega_n t + \frac{\delta_0 \omega_0}{1 - \left(\frac{\omega_0}{\omega_n}\right)^2} \cos \omega_0 t$$

The initial condition when $t = 0$, $y = y_0$, and $v = v_0$ is

$$y_0 = 0 + B + 0 \qquad B = y_0$$

$$v_0 = A\omega_n - 0 + \frac{\delta_0\, \omega_0}{1 - \left(\frac{\omega_0}{\omega_n}\right)^2} \qquad A = \frac{v_0}{\omega_n} - \frac{\delta_0 \omega_0}{\omega_n - \frac{\omega_0{}^2}{\omega_n}}$$

Thus,

$$y = \left(\frac{v_0}{\omega_n} - \frac{\delta_0\, \omega_0}{\omega_n - \frac{\omega_0{}^2}{\omega_n}}\right) \sin \omega_n t + y_0 \cos \omega_n t + \frac{\delta_0}{1 - \left(\frac{\omega_0}{\omega_n}\right)^2} \sin \omega_0 t$$

$$\omega_n = \sqrt{\frac{k}{m}} = \sqrt{\frac{10}{4/32.2}} = 8.972$$

$$\frac{\delta_0}{1 - \left(\frac{\omega_0}{\omega_n}\right)^2} = \frac{0.5/12}{1 - \left(\frac{4}{8.972}\right)^2} = 0.0520$$

$$\frac{v_0}{\omega_n} - \frac{\delta_0\, \omega_0}{\omega_n - \frac{\omega_0{}^2}{\omega_n}} = 0 - \frac{(0.5/12)4}{8.972 - \frac{4^2}{8.972}} = -0.0232$$

$$y = (-0.0232 \sin 8.97t + 0.333 \cos 8.97t + 0.0520 \sin 4t) \text{ ft} \qquad \textbf{Ans.}$$

Ans:
$y = \{-0.0232 \sin 8.97\,t + 0.333 \cos 8.97\,t + 0.0520 \sin 4\,t\}$ ft

Engineering Mechanics Dynamics 14th edition Hibbeler Solutions Manual

© 2016 Pearson Education, Inc., Upper Saddle River, NJ. All rights reserved. This material is protected under all copyright laws as they currently exist. No portion of this material may be reproduced, in any form or by any means, without permission in writing from the publisher.

***22–44.**

A 4-kg block is suspended from a spring that has a stiffness of $k = 600$ N/m. The block is drawn downward 50 mm from the equilibrium position and released from rest when $t = 0$. If the support moves with an impressed displacement of $\delta = (10 \sin 4t)$ mm, where t is in seconds, determine the equation that describes the vertical motion of the block. Assume positive displacement is downward.

SOLUTION

$$\omega_n = \sqrt{\frac{k}{m}} = \sqrt{\frac{600}{4}} = 12.25$$

The general solution is defined by Eq. 22–23 with $k\delta_0$ substituted for F_0.

$$y = A \sin \omega_n t + B \cos \omega_n t + \left(\frac{\delta_0}{\left[1 - \left(\frac{\omega}{\omega_n}\right)^2\right]} \right) \sin \omega t$$

$\delta = (0.01 \sin 4t)$m, hence $\delta_0 = 0.01$, $\omega = 4$, so that

$y = A \sin 12.25t + B \cos 12.25t + 0.0112 \sin 4t$

$y = 0.05$ when $t = 0$

$0.05 = 0 + B + 0; \qquad B = 0.05$ m

$\dot{y} = A(12.25) \cos 12.25t - B(12.25) \sin 12.25t + 0.0112(4) \cos 4t$

$v = y = 0$ when $t = 0$

$0 = A(12.25) - 0 + 0.0112(4); \qquad A = -0.00366$ m

Expressing the result in mm, we have

$y = (-3.66 \sin 12.25t + 50 \cos 12.25t + 11.2 \sin 4t)$ mm **Ans.**

Ans:
$y = (-3.66 \sin 12.25t + 50 \cos 12.25t + 11.2 \sin 4t)$ mm

Engineering Mechanics Dynamics 14th edition Hibbeler Solutions Manual

© 2016 Pearson Education, Inc., Upper Saddle River, NJ. All rights reserved. This material is protected under all copyright laws as they currently exist. No portion of this material may be reproduced, in any form or by any means, without permission in writing from the publisher.

22–45.

Use a block-and-spring model like that shown in Fig. 22–14*a*, but suspended from a vertical position and subjected to a periodic support displacement $\delta = \delta_0 \sin \omega_0 t$, determine the equation of motion for the system, and obtain its general solution. Define the displacement y measured from the static equilibrium position of the block when $t = 0$.

SOLUTION

$$+\uparrow \Sigma F_x = ma_x; \qquad k(y - \delta_0 \sin \omega_0 t + y_{st}) - mg = -m\ddot{y}$$

$$m\ddot{y} + ky + ky_{st} - mg = k\delta_0 \sin \omega_0 t$$

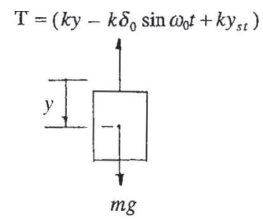

However, from equilibrium

$$ky_{st} - mg = 0, \text{ therefore}$$

$$\ddot{y} + \frac{k}{m} y = \frac{k\delta_0}{m} \sin \omega t \qquad \text{where } \omega_n = \sqrt{\frac{k}{m}}$$

$$\ddot{y} + \omega_n^2 y = \frac{k\delta_0}{m} \sin \omega t \qquad \textbf{Ans. (1)}$$

The general solution of the above differential equation is of the form of $y = y_c + y_p$, where

$$y_c = A \sin \omega_n t + B \cos \omega_n t$$

$$y_p = C \sin \omega_0 t \qquad \textbf{(2)}$$

$$\ddot{y}_p = -C\omega_0^2 \sin \omega_0 t \qquad \textbf{(3)}$$

Substitute Eqs. (2) and (3) into (1) yields:

$$-C\omega^2 \sin \omega_0 t + \omega_n^2 (C \sin \omega_0 t) = \frac{k\delta_0}{m} \sin \omega_0 t$$

$$C = \frac{\dfrac{k\delta_0}{m}}{\omega_n^2 - \omega_0^2} = \frac{\delta_0}{1 - \left(\dfrac{\omega_0}{\omega_n}\right)^2}$$

The general solution is therefore

$$y = A \sin \omega_n t + B \cos \omega_n t + \frac{\delta_0}{1 - \left(\dfrac{\omega_0}{\omega_n}\right)^2} \sin \omega t \qquad \textbf{Ans.}$$

The constants A and B can be found from the initial conditions.

Ans:

$$y = A \sin \omega_n t + B \cos \omega_n t + \frac{\delta_0}{1 - (\omega/\omega_n)^2} \sin \omega t$$

Engineering Mechanics Dynamics 14th edition Hibbeler Solutions Manual

© 2016 Pearson Education, Inc., Upper Saddle River, NJ. All rights reserved. This material is protected under all copyright laws as they currently exist. No portion of this material may be reproduced, in any form or by any means, without permission in writing from the publisher.

22–46.

A 5-kg block is suspended from a spring having a stiffness of 300 N/m. If the block is acted upon by a vertical force $F = (7 \sin 8t)$ N, where t is in seconds, determine the equation which describes the motion of the block when it is pulled down 100 mm from the equilibrium position and released from rest at $t = 0$. Assume that positive displacement is downward.

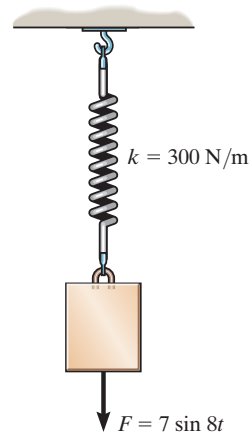

SOLUTION

The general solution is defined by:

$$y = A \sin \omega_n t + B \cos \omega_n t + \left(\frac{\frac{F_0}{k}}{1 - \left(\frac{\omega_0}{\omega_n}\right)^2} \right) \sin \omega_0 t$$

Since

$$F = 7 \sin 8t, \qquad F_0 = 7 \text{ N}, \qquad \omega_0 = 8 \text{ rad/s}, \qquad k = 300 \text{ N/m}$$

$$\omega_n = \sqrt{\frac{k}{m}} = \sqrt{\frac{300}{5}} = 7.746 \text{ rad/s}$$

Thus,

$$y = A \sin 7.746t + B \cos 7.746t + \left(\frac{\frac{7}{300}}{1 - \left(\frac{8}{7.746}\right)^2} \right) \sin 8t$$

$y = 0.1$ m when $t = 0$,

$0.1 = 0 + B - 0; \qquad B = 0.1$ m

$\dot{y} = A(7.746) \cos 7.746t - B(7.746) \sin 7.746t - (0.35)(8) \cos 8t$

$y = \dot{y} = 0$ when $t = 0$,

$\dot{y} = A(7.746) - 2.8 = 0; \qquad A = 0.361$

Expressing the results in mm, we have

$y = (361 \sin 7.75t + 100 \cos 7.75t - 350 \sin 8t)$ mm **Ans.**

Ans:
$y = (361 \sin 7.75t + 100 \cos 7.75t)$
$-350 \sin 8t)$ mm

Engineering Mechanics Dynamics 14th edition Hibbeler Solutions Manual

© 2016 Pearson Education, Inc., Upper Saddle River, NJ. All rights reserved. This material is protected under all copyright laws as they currently exist. No portion of this material may be reproduced, in any form or by any means, without permission in writing from the publisher.

22–47.

The uniform rod has a mass of m. If it is acted upon by a periodic force of $F = F_0 \sin \omega t$, determine the amplitude of the steady-state vibration.

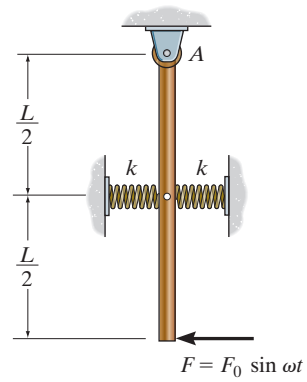

SOLUTION

Equation of Motion: When the rod rotates through a small angle θ, the springs compress and stretch $s = r_{AG}\theta = \frac{L}{2}\theta$. Thus, the force in each spring is $F_{sp} = ks = \frac{kL}{2}\theta$. The mass moment of inertia of the rod about point A is $I_A = \frac{1}{3}mL^2$. Referring to the free-body diagram of the rod shown in Fig. a,

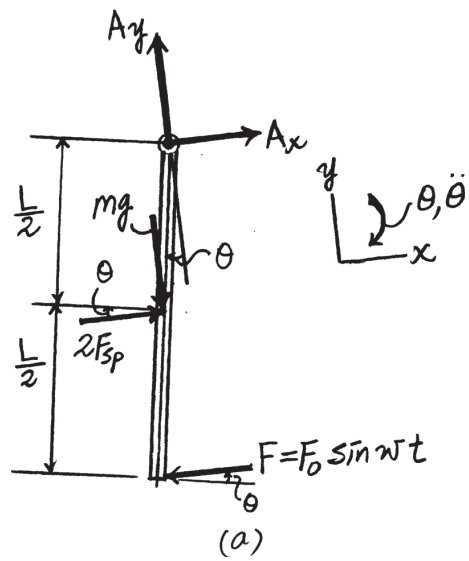

$$+\Sigma M_A = I_A\alpha; \qquad F_O \sin \omega t \cos \theta(L) - mg \sin \theta\left(\frac{L}{2}\right) - 2\left(\frac{kL}{2}\theta\right)\cos \theta\left(\frac{L}{2}\right)$$

$$= \frac{1}{3}mL^2\ddot{\theta}$$

Since θ is small, $\sin \theta \cong 0$ and $\cos \theta \cong 1$. Thus, this equation becomes

$$\frac{1}{3}mL\ddot{\theta} + \frac{1}{2}(mg + kL)\theta = F_O \sin \omega t$$

$$\ddot{\theta} + \frac{3}{2}\left(\frac{g}{L} + \frac{k}{m}\right)\theta = \frac{3F_O}{mL}\sin \omega t \qquad \textbf{(1)}$$

The particular solution of this differential equation is assumed to be in the form of

$$\theta_p = C \sin \omega t \qquad \textbf{(2)}$$

Taking the time derivative of Eq. (2) twice,

$$\ddot{\theta}_p = -C\omega^2 \sin \omega t \qquad \textbf{(3)}$$

Substituting Eqs. (2) and (3) into Eq. (1),

$$-C\omega^2 \sin \omega t + \frac{3}{2}\left(\frac{g}{L} + \frac{k}{m}\right)(C \sin \omega t) = \frac{3F_O}{mL}\sin \omega t$$

$$C\left[\frac{3}{2}\left(\frac{g}{L} + \frac{k}{m}\right) - \omega^2\right]\sin \omega t = \frac{3F_O}{mL}\sin \omega t$$

$$C = \frac{3F_O/mL}{\frac{3}{2}\left(\frac{g}{L} + \frac{k}{m}\right) - \omega^2}$$

$$C = \frac{3F_O}{\frac{3}{2}(mg + Lk) - mL\omega^2} \qquad \textbf{Ans.}$$

Ans:
$C = \dfrac{3F_O}{\frac{3}{2}(mg + Lk) - mL\omega^2}$

Engineering Mechanics Dynamics 14th edition Hibbeler Solutions Manual

© 2016 Pearson Education, Inc., Upper Saddle River, NJ. All rights reserved. This material is protected under all copyright laws as they currently exist. No portion of this material may be reproduced, in any form or by any means, without permission in writing from the publisher.

***22–48.**

The 30-lb block is attached to two springs having a stiffness of 10 lb/ft. A periodic force $F = (8 \cos 3t)$ lb, where t is in seconds, is applied to the block. Determine the maximum speed of the block after frictional forces cause the free vibrations to dampen out.

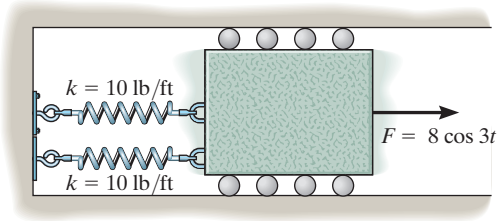

SOLUTION

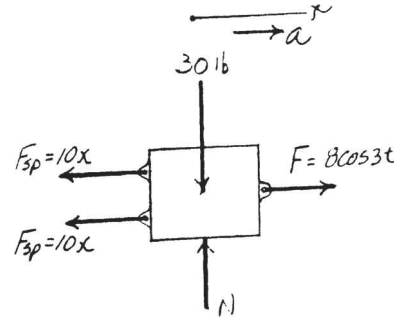

Free-body Diagram: When the block is being displaced by amount x to the right, the *restoring force* that develops in both springs is $F_{sp} = kx = 10x$.

Equation of Motion:

$$\xrightarrow{+} \Sigma F_x = 0; \qquad -2(10x) + 8 \cos 3t = \frac{30}{32.2} a$$

$$a + 21.47x = 8.587 \cos 3t \qquad \textbf{[1]}$$

Kinematics: Since $a = \dfrac{d^2x}{dt^2} = \ddot{x}$, then substituting this value into Eq. [1], we have

$$\ddot{x} + 21.47x = 8.587 \cos 3t \qquad \textbf{[2]}$$

Since the friction will eventually dampen out the free vibration, we are only interested in the *particular solution* of the above differential equation which is in the form of

$$x_p = C \cos 3t$$

Taking second time derivative and substituting into Eq. [2], we have

$$-9C \cos 3t + 21.47C \cos 3t = 8.587 \cos 3t$$

$$C = 0.6888 \text{ ft}$$

Thus,

$$x_p = 0.6888 \cos 3t \qquad \textbf{[3]}$$

Taking the time derivative of Eq. [3], we have

$$v_p = \dot{x}_p = -2.0663 \sin 3t$$

Thus,

$$(v_p)_{max} = 2.07 \text{ ft/s} \qquad \textbf{Ans.}$$

Ans:
$(v_p)_{max} = 2.07$ ft/s

Engineering Mechanics Dynamics 14th edition Hibbeler Solutions Manual

© 2016 Pearson Education, Inc., Upper Saddle River, NJ. All rights reserved. This material is protected under all copyright laws as they currently exist. No portion of this material may be reproduced, in any form or by any means, without permission in writing from the publisher.

22–49.

The light elastic rod supports a 4-kg sphere. When an 18-N vertical force is applied to the sphere, the rod deflects 14 mm. If the wall oscillates with harmonic frequency of 2 Hz and has an amplitude of 15 mm, determine the amplitude of vibration for the sphere.

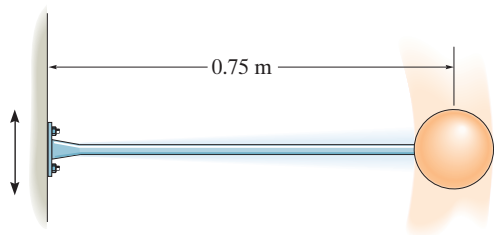

SOLUTION

$$k = \frac{F}{\Delta y} = \frac{18}{0.014} = 1285.71 \text{ N/m}$$

$$\omega_0 = 2 \text{ Hz} = 2(2\pi) = 12.57 \text{ rad/s}$$

$$\delta_0 = 0.015 \text{ m}$$

$$\omega_n = \sqrt{\frac{k}{m}} = \sqrt{\frac{1285.71}{4}} = 17.93$$

Using Eq. 22–22, the amplitude is

$$(x_p)_{max} = \left| \frac{\delta_0}{1 - \left(\frac{\omega_0}{\omega_n}\right)^2} \right| = \left| \frac{0.015}{1 - \left(\frac{12.57}{17.93}\right)^2} \right|$$

$$(x_p)_{max} = 0.0295 \text{ m} = 29.5 \text{ mm}$$ **Ans.**

Ans:
$(x_p)_{\max} = 29.5$ mm

Engineering Mechanics Dynamics 14th edition Hibbeler Solutions Manual

© 2016 Pearson Education, Inc., Upper Saddle River, NJ. All rights reserved. This material is protected under all copyright laws as they currently exist. No portion of this material may be reproduced, in any form or by any means, without permission in writing from the publisher.

22–50.

Find the differential equation for small oscillations in terms of θ for the uniform rod of mass m. Also show that if $c < \sqrt{mk}/2$, then the system remains underdamped. The rod is in a horizontal position when it is in equilibrium.

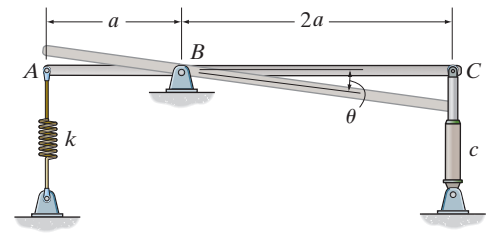

SOLUTION

Equation of Motion: When the rod is in equilibrium, $\theta = 0°$, $F_c = c\dot{y}_c = 0$ and $\ddot{\theta} = 0$. writing the moment equation of motion about point B by referring to the free-body diagram of the rod, Fig. a,

$$+\Sigma M_B = 0; \qquad -F_A(a) - mg\left(\frac{a}{2}\right) = 0 \qquad F_A = \frac{mg}{2}$$

Thus, the initial stretch of the spring is $s_O = \frac{F_A}{k} = \frac{mg}{2k}$. When the rod rotates about point B through a small angle θ, the spring stretches further by $s_1 = a\theta$. Thus, the force in the spring is $F_A = k(s_0 + s_1) = k\left(\frac{mg}{2k} + a\theta\right)$. Also, the velocity of end C of the rod is $v_c = \dot{y}_c = 2a\dot{\theta}$. Thus, $F_c = c\dot{y}_c = c(2a\dot{\theta})$. The mass moment of inertia of the rod about B is $I_B = \frac{1}{12}m(3a)^2 + m\left(\frac{a}{2}\right)^2 = ma^2$. Again, referring to Fig. a and writing the moment equation of motion about B,

$$\Sigma M_B = I_B\alpha; \qquad k\left(\frac{mg}{2k} + a\theta\right)\cos\theta(a) + \left(2a\dot{\theta}\right)\cos\theta(2a) - mg\cos\theta\left(\frac{a}{2}\right)$$

$$= -ma^2\ddot{\theta}$$

$$\ddot{\theta} + \frac{4c}{m}\cos\theta\dot{\theta} + \frac{k}{m}(\cos\theta)\theta = 0$$

Since θ is small, $\cos\theta \cong 1$. Thus, this equation becomes

$$\ddot{\theta} + \frac{4c}{m}\dot{\theta} + \frac{k}{m}\theta = 0 \qquad \textbf{Ans.}$$

Comparing this equation to that of the standard form,

$$\omega_n = \sqrt{\frac{k}{m}} \qquad c_{eq} = 4c$$

Thus,

$$c_c = 2m\omega_n = 2m\sqrt{\frac{k}{m}} = 2\sqrt{mk}$$

For the system to be underdamped,

$$c_{eq} < c_c$$

$$4c < 2\sqrt{mk}$$

$$c < \frac{1}{2}\sqrt{mk} \qquad \textbf{Ans.}$$

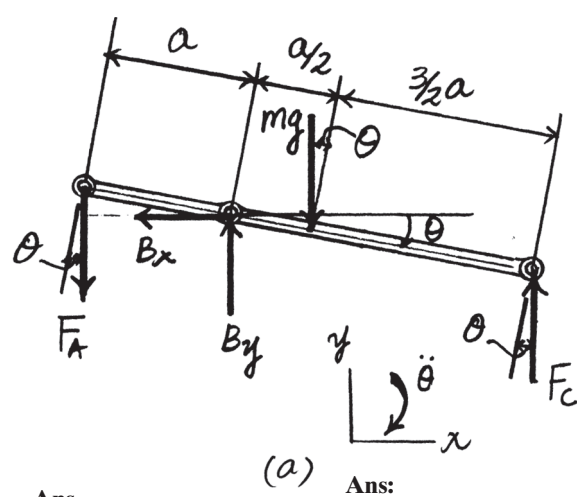

Ans:
$$\ddot{\theta} + \frac{4c}{m}\dot{\theta} + \frac{k}{m}\dot{\theta} = 0$$

Engineering Mechanics Dynamics 14th edition Hibbeler Solutions Manual

© 2016 Pearson Education, Inc., Upper Saddle River, NJ. All rights reserved. This material is protected under all copyright laws as they currently exist. No portion of this material may be reproduced, in any form or by any means, without permission in writing from the publisher.

22–51.

The 40-kg block is attached to a spring having a stiffness of 800 N/m. A force $F = (100 \cos 2t)$ N, where t is in seconds is applied to the block. Determine the maximum speed of the block for the steady-state vibration.

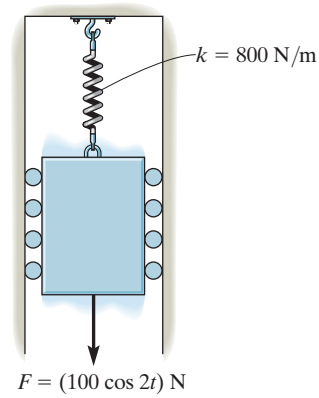

SOLUTION

For the steady-state vibration, the displacement is

$$y_p = \frac{F_0/k}{1 - (\omega_0/\omega_n)^2} \cos \omega t$$

Here $F_0 = 100$ N, $k = 800$ N/m, $\omega_0 = 2$ rad/s and

$$\omega_n = \sqrt{\frac{k}{m}} = \sqrt{\frac{800}{40}} = \sqrt{20} \text{ rad/s.}$$

Thus

$$y_p = \frac{100/800}{1 - (2/\sqrt{20})^2} \cos 2t$$

$$y_P = 0.15625 \cos 2t$$

Taking the time derivative of this equation

$$v_p = \dot{y}_p = -0.3125 \sin 2t \qquad \textbf{(2)}$$

v_p is maximum when $\sin 2t = 1$. Thus

$$(v_p)_{\max} = 0.3125 \text{ m/s} \qquad \textbf{Ans.}$$

Ans:
$(v_p)_{\max} = 0.3125$ m/s

Engineering Mechanics Dynamics 14th edition Hibbeler Solutions Manual

© 2016 Pearson Education, Inc., Upper Saddle River, NJ. All rights reserved. This material is protected under all copyright laws as they currently exist. No portion of this material may be reproduced, in any form or by any means, without permission in writing from the publisher.

***22–52.**

Use a block-and-spring model like that shown in Fig. 22–14*a* but suspended from a vertical position and subjected to a periodic support displacement of $\delta = \delta_0 \cos \omega_0 t$, determine the equation of motion for the system, and obtain its general solution. Define the displacement y measured from the static equilibrium position of the block when $t = 0$.

SOLUTION

$+\downarrow \Sigma F_y = ma_y; \quad k\delta_0 \cos \omega_0 t + W - k\delta_{st} - ky = m\ddot{y}$

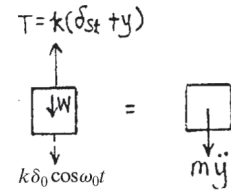

Since $W = k\delta_{st}$,

$$\ddot{y} + \frac{k}{m}y = \frac{k\delta_0}{m}\cos \omega_0 t \qquad \textbf{(1)}$$

$y_C = A \sin \omega_n y + B \cos \omega_n y$ (General sol.)

$y_P = C \cos \omega_0 t$ (Particular sol.)

Substitute y_p into Eq. (1)

$$C\left(-\omega_0^2 + \frac{k}{m}\right) \cos \omega_0 t = \frac{k\delta_0}{m} \cos \omega_0 t$$

$$C = \frac{\dfrac{k\delta_0}{m}}{\left(\dfrac{k}{m} - \omega_0^2\right)}$$

Thus, $y = y_C + y_P$

$$y = A \sin \omega_n t + B \cos \omega_n t + \frac{\dfrac{k\delta_0}{m}}{\left(\dfrac{k}{m} - \omega_0^2\right)} \cos \omega_0 t \qquad \textbf{Ans.}$$

Ans:

$$y = A \sin \omega_n t + B \cos \omega_n t + \frac{\dfrac{k\delta_0}{m}}{\left(\dfrac{k}{m} - \omega_0^2\right)} \cos \omega_0 t$$

Engineering Mechanics Dynamics 14th edition Hibbeler Solutions Manual

© 2016 Pearson Education, Inc., Upper Saddle River, NJ. All rights reserved. This material is protected under all copyright laws as they currently exist. No portion of this material may be reproduced, in any form or by any means, without permission in writing from the publisher.

22–53.

The fan has a mass of 25 kg and is fixed to the end of a horizontal beam that has a negligible mass. The fan blade is mounted eccentrically on the shaft such that it is equivalent to an unbalanced 3.5-kg mass located 100 mm from the axis of rotation. If the static deflection of the beam is 50 mm as a result of the weight of the fan, determine the angular velocity of the fan blade at which resonance will occur. *Hint:* See the first part of Example 22.8.

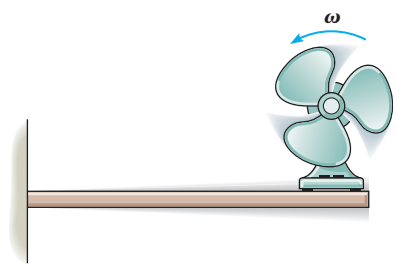

SOLUTION

$$k = \frac{F}{\Delta y} = \frac{25(9.81)}{0.05} = 4905 \text{ N/m}$$

$$\omega_n = \sqrt{\frac{k}{m}} = \sqrt{\frac{4905}{25}} = 14.01 \text{ rad/s}$$

Resonance occurs when

$$\omega = \omega_n = 14.0 \text{ rad/s} \qquad \textbf{Ans.}$$

Ans:
$\omega = 14.0$ rad/s

Engineering Mechanics Dynamics 14th edition Hibbeler Solutions Manual

© 2016 Pearson Education, Inc., Upper Saddle River, NJ. All rights reserved. This material is protected under all copyright laws as they currently exist. No portion of this material may be reproduced, in any form or by any means, without permission in writing from the publisher.

22–54.

In Prob. 22–53, determine the amplitude of steady-state vibration of the fan if its angular velocity is 10 rad/s.

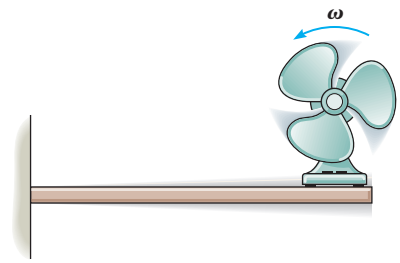

SOLUTION

$$k = \frac{F}{\Delta y} = \frac{25(9.81)}{0.05} = 4905 \text{ N/m}$$

$$\omega_n = \sqrt{\frac{k}{m}} = \sqrt{\frac{4905}{25}} = 14.01 \text{ rad/s}$$

The force caused by the unbalanced rotor is

$$F_0 = mr\,\omega^2 = 3.5(0.1)(10)^2 = 35 \text{ N}$$

Using Eq. 22–22, the amplitude is

$$(x_p)_{\max} = \left| \frac{\frac{F_0}{k}}{1 - \left(\frac{\omega}{p}\right)^2} \right|$$

$$(x_p)_{\max} = \left| \frac{\frac{35}{4905}}{1 - \left(\frac{10}{14.01}\right)^2} \right| = 0.0146 \text{ m}$$

$$(x_p)_{\max} = 14.6 \text{ mm}$$ **Ans.**

Ans:
$(x_p)_{\max} = 14.6$ mm

Engineering Mechanics Dynamics 14th edition Hibbeler Solutions Manual

© 2016 Pearson Education, Inc., Upper Saddle River, NJ. All rights reserved. This material is protected under all copyright laws as they currently exist. No portion of this material may be reproduced, in any form or by any means, without permission in writing from the publisher.

22–55.

What will be the amplitude of steady-state vibration of the fan in Prob. 22–53 if the angular velocity of the fan blade is 18 rad/s? *Hint:* See the first part of Example 22.8.

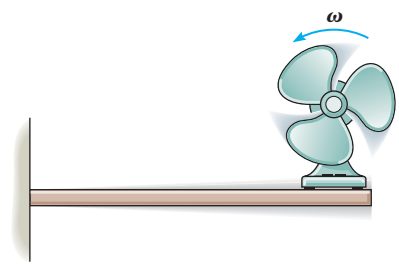

SOLUTION

$$k = \frac{F}{\Delta y} = \frac{25(9.81)}{0.05} = 4905 \text{ N/m}$$

$$\omega_n = \sqrt{\frac{k}{m}} = \sqrt{\frac{4905}{25}} = 14.01 \text{ rad/s}$$

The force caused by the unbalanced rotor is

$$F_0 = mr\omega^2 = 3.5(0.1)(18)^2 = 113.4 \text{ N}$$

Using Eq. 22–22, the amplitude is

$$(x_p)_{\max} = \left| \frac{\frac{F_0}{k}}{1 - \left(\frac{\omega}{p}\right)^2} \right|$$

$$(x_p)_{\max} = \left| \frac{\frac{113.4}{4905}}{1 - \left(\frac{18}{14.01}\right)^2} \right| = 0.0355 \text{ m}$$

$$(x_p)_{\max} = 35.5 \text{ mm}$$ **Ans.**

Ans:
$(x_p)_{\max} = 35.5$ mm

Engineering Mechanics Dynamics 14th edition Hibbeler Solutions Manual

© 2016 Pearson Education, Inc., Upper Saddle River, NJ. All rights reserved. This material is protected under all copyright laws as they currently exist. No portion of this material may be reproduced, in any form or by any means, without permission in writing from the publisher.

***22–56.**

The small block at A has a mass of 4 kg and is mounted on the bent rod having negligible mass. If the rotor at B causes a harmonic movement $\delta_B = (0.1 \cos 15t)$ m, where t is in seconds, determine the steady-state amplitude of vibration of the block.

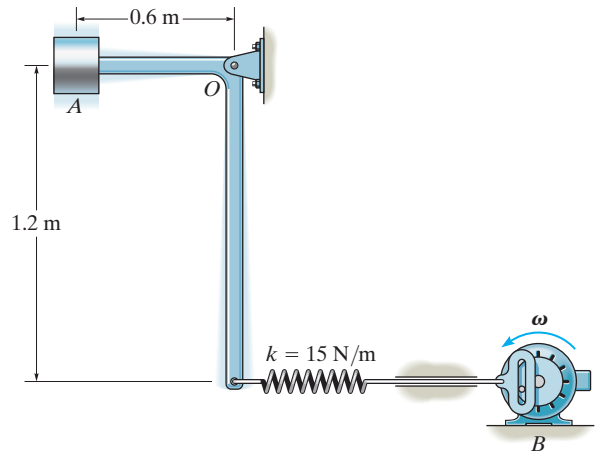

SOLUTION

$$+\Sigma M_O = I_O\,\alpha; \qquad 4(9.81)(0.6) - F_s(1.2) = 4(0.6)^2\ddot{\theta}$$

$$F_s = kx = 15(x + x_{st} - 0.1\cos 15t)$$

$$x_{st} = \frac{4(9.81)(0.6)}{1.2(15)}$$

Thus,

$$-15(x - 0.1\cos 15t)(1.2) = 4(0.6)^2\ddot{\theta}$$

$$x = 1.2\theta$$

$$\theta + 15\theta = 1.25\cos 15t$$

Set $x_p = C\cos 15t$

$$-C(15)^2\cos 15t + 15(C\cos 15t) = 1.25\cos 15t$$

$$C = \frac{1.25}{15 - (15)^2} = -0.00595 \text{ m}$$

$$\theta_{\max} = C = 0.00595 \text{ rad}$$

$$y_{\max} = (0.6 \text{ m})(0.00595 \text{ rad}) = 0.00357 \text{ rad} \qquad \textbf{Ans.}$$

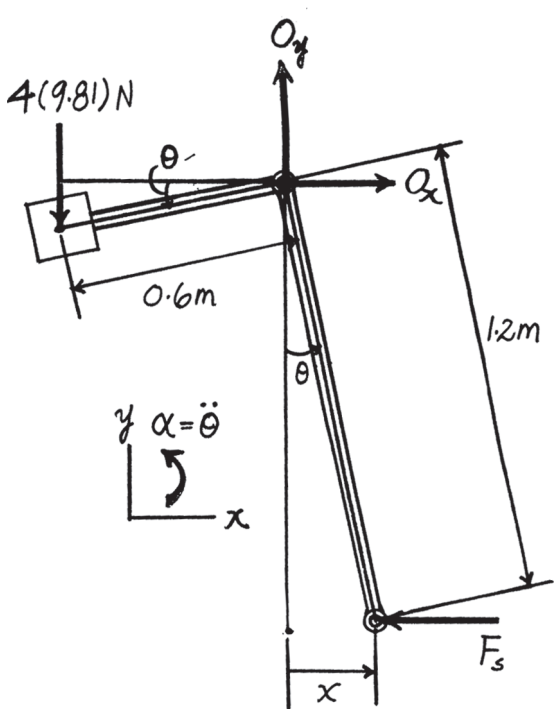

Ans:
$y_{\max} = 0.00357$ rad

Engineering Mechanics Dynamics 14th edition Hibbeler Solutions Manual

© 2016 Pearson Education, Inc., Upper Saddle River, NJ. All rights reserved. This material is protected under all copyright laws as they currently exist. No portion of this material may be reproduced, in any form or by any means, without permission in writing from the publisher.

22–57.

The electric motor turns an eccentric flywheel which is equivalent to an unbalanced 0.25-lb weight located 10 in. from the axis of rotation. If the static deflection of the beam is 1 in. due to the weight of the motor, determine the angular velocity of the flywheel at which resonance will occur. The motor weights 150 lb. Neglect the mass of the beam.

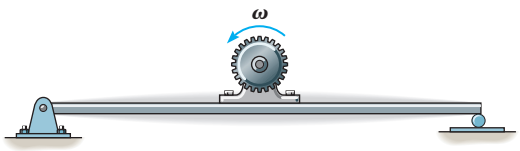

SOLUTION

$$k = \frac{F}{\delta} = \frac{150}{1/12} = 1800 \text{ lb/ft} \qquad \omega_n = \sqrt{\frac{k}{m}} = \sqrt{\frac{1800}{150/32.2}} = 19.66$$

Resonance occurs when $\omega = \omega_n = 19.7 \text{ rad/s}$ **Ans.**

Ans:
$\omega = 19.7 \text{ rad/s}$

Engineering Mechanics Dynamics 14th edition Hibbeler Solutions Manual

© 2016 Pearson Education, Inc., Upper Saddle River, NJ. All rights reserved. This material is protected under all copyright laws as they currently exist. No portion of this material may be reproduced, in any form or by any means, without permission in writing from the publisher.

22–58.

What will be the amplitude of steady-state vibration of the motor in Prob. 22–57 if the angular velocity of the flywheel is 20 rad/s?

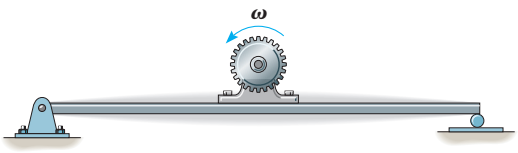

SOLUTION

The constant value F_O of the periodic force is due to the centrifugal force of the unbalanced mass.

$$F_O = ma_n = mr\omega^2 = \left(\frac{0.25}{32.2}\right)\left(\frac{10}{12}\right)(20)^2 = 2.588 \text{ lb}$$

Hence $F = 2.588 \sin 20t$

$$k = \frac{F}{\delta} = \frac{150}{1/12} = 1800 \text{ lb/ft} \qquad \omega_n = \sqrt{\frac{k}{m}} = \sqrt{\frac{1800}{150/32.2}} = 19.657$$

From Eq. 22–21, the amplitude of the steady state motion is

$$C = \left|\frac{F_0/k}{1 - \left(\frac{\omega_0}{\omega_n}\right)^2}\right| = \left|\frac{2.588/1800}{1 - \left(\frac{20}{19.657}\right)^2}\right| = 0.04085 \text{ ft} = 0.490 \text{ in.} \qquad \textbf{Ans.}$$

Ans:
$C = 0.490$ in.

Engineering Mechanics Dynamics 14th edition Hibbeler Solutions Manual

© 2016 Pearson Education, Inc., Upper Saddle River, NJ. All rights reserved. This material is protected under all copyright laws as they currently exist. No portion of this material may be reproduced, in any form or by any means, without permission in writing from the publisher.

22–59.

Determine the angular velocity of the flywheel in Prob. 22–57 which will produce an amplitude of vibration of 0.25 in.

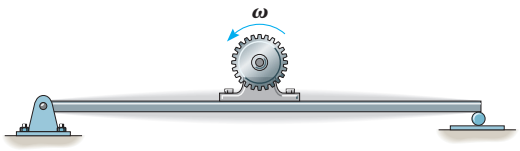

SOLUTION

The constant value F_O of the periodic force is due to the centrifugal force of the unbalanced mass.

$$F_O = ma_n = mr\omega^2 = \left(\frac{0.25}{32.2}\right)\left(\frac{10}{12}\right)\omega^2 = 0.006470\omega^2$$

$$F = 0.006470\omega^2 \sin \omega t$$

$$k = \frac{F}{\delta} = \frac{150}{1/12} = 1800 \text{ lb/ft} \qquad \omega_n = \sqrt{\frac{k}{m}} = \sqrt{\frac{1800}{150/32.2}} = 19.657$$

From Eq. 22.21, the amplitude of the steady-state motion is

$$C = \left|\frac{F_0/k}{1 - \left(\frac{\omega}{\omega_n}\right)^2}\right|$$

$$\frac{0.25}{12} = \left|\frac{0.006470\left(\frac{\omega^2}{1800}\right)}{1 - \left(\frac{\omega}{19.657}\right)^2}\right|$$

$$\omega = 19.0 \text{ rad/s} \qquad \textbf{Ans.}$$

Ans:
$\omega = 19.0$ rad/s

Engineering Mechanics Dynamics 14th edition Hibbeler Solutions Manual

© 2016 Pearson Education, Inc., Upper Saddle River, NJ. All rights reserved. This material is protected under all copyright laws as they currently exist. No portion of this material may be reproduced, in any form or by any means, without permission in writing from the publisher.

***22–60.**

The 450-kg trailer is pulled with a constant speed over the surface of a bumpy road, which may be approximated by a cosine curve having an amplitude of 50 mm and wave length of 4 m. If the two springs s which support the trailer each have a stiffness of 800 N/m, determine the speed v which will cause the greatest vibration (resonance) of the trailer. Neglect the weight of the wheels.

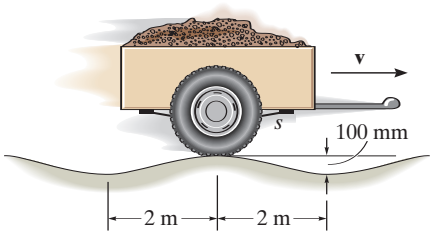

SOLUTION

The amplitude is $\delta_0 = 50 \text{ mm} = 0.05 \text{ m}$

The wave length is $\lambda = 4 \text{ m}$

$$k = 2(800) = 1600 \text{ N/m}$$

$$\omega_n = \sqrt{\frac{k}{m}} = \sqrt{\frac{1600}{450}} = 1.89 \text{ rad/s}$$

$$\tau = \frac{2\pi}{\omega_n} = \frac{2\pi}{1.89} = 3.33 \text{ s}$$

For maximum vibration of the trailer, resonance must occur, i.e.,

$$\omega_0 = \omega_n$$

Thus, the trailer must travel $\lambda = 4$ m, in $\tau = 3.33$ s, so that

$$v_R = \frac{\lambda}{\tau} = \frac{4}{3.33} = 1.20 \text{ m.s} \qquad \textbf{Ans.}$$

Ans:
$v_R = 1.20$ m.s

Engineering Mechanics Dynamics 14th edition Hibbeler Solutions Manual

© 2016 Pearson Education, Inc., Upper Saddle River, NJ. All rights reserved. This material is protected under all copyright laws as they currently exist. No portion of this material may be reproduced, in any form or by any means, without permission in writing from the publisher.

22–61.

Determine the amplitude of vibration of the trailer in Prob. 22–60 if the speed $v = 15$ km/h.

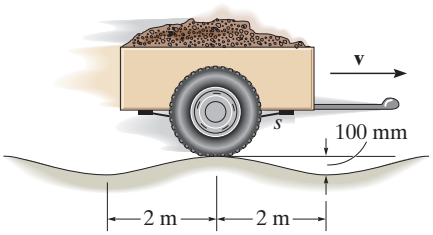

SOLUTION

$$v = 15 \text{ km/h} = \frac{15(1000)}{3600} \text{ m/s} = 4.17 \text{ m/s}$$

$$\delta_0 = 0.05 \text{ m}$$

As shown in Prob. 22–50, the velocity is inversely proportional to the period. Since $\frac{1}{\tau} = f$ the the velocity is proportional of f, ω_n and ω_0

Hence, the amplitude of motion is

$$(x_p)_{max} = \left|\frac{\delta_0}{1 - \left(\frac{\omega_0}{\omega_n}\right)^2}\right| = \left|\frac{\delta_0}{1 - \left(\frac{v}{v_R}\right)^2}\right|$$

$$(x_p)_{max} = \left|\frac{0.05}{1 - \left(\frac{4.17}{1.20}\right)^2}\right| = 0.00453 \text{ m}$$

$$(x_p)_{max} = 4.53 \text{ mm}$$ **Ans.**

Ans:
$(x_p)_{\max} = 4.53$ mm

Engineering Mechanics Dynamics 14th edition Hibbeler Solutions Manual

© 2016 Pearson Education, Inc., Upper Saddle River, NJ. All rights reserved. This material is protected under all copyright laws as they currently exist. No portion of this material may be reproduced, in any form or by any means, without permission in writing from the publisher.

22–62.

The motor of mass M is supported by a simply supported beam of negligible mass. If block A of mass m is clipped onto the rotor, which is turning at constant angular velocity of ω, determine the amplitude of the steady-state vibration. *Hint:* When the beam is subjected to a concentrated force of P at its mid-span, it deflects $\delta = PL^3/48EI$ at this point. Here E is Young's modulus of elasticity, a property of the material, and I is the moment of inertia of the beam's cross-sectional area.

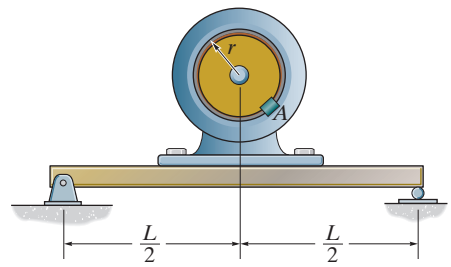

SOLUTION

In this case, $P = k_{eq}\delta$. Then, $k_{eq} = \dfrac{P}{\delta} = \dfrac{P}{PL^3/48EI} = \dfrac{48EI}{L^3}$. Thus, the natural frequency of the system is

$$\omega_n = \sqrt{\frac{k_{eq}}{m}} = \sqrt{\frac{\dfrac{48EI}{L^3}}{M}} = \sqrt{\frac{48EI}{ML^3}}$$

Here, $F_O = ma_n = m(\omega^2 r)$. Thus,

$$Y = \frac{F_O/k_{eq}}{1 - \left(\dfrac{\omega}{\omega_n}\right)^2}$$

$$Y = \frac{\dfrac{m(\omega^2 r)}{48EI/L^3}}{1 - \dfrac{\omega^2}{48EI/ML^3}}$$

$$Y = \frac{mr\omega^2 L^3}{48EI - M\omega^2 L^3} \qquad \textbf{Ans.}$$

Ans:

$$Y = \frac{mr\omega^2 L^3}{48EI - M\omega^2 L^3}$$

Engineering Mechanics Dynamics 14th edition Hibbeler Solutions Manual

© 2016 Pearson Education, Inc., Upper Saddle River, NJ. All rights reserved. This material is protected under all copyright laws as they currently exist. No portion of this material may be reproduced, in any form or by any means, without permission in writing from the publisher.

22–63.

The spring system is connected to a crosshead that oscillates vertically when the wheel rotates with a constant angular velocity of $\boldsymbol{\omega}$. If the amplitude of the steady-state vibration is observed to be 400 mm, and the springs each have a stiffness of $k = 2500$ N/m, determine the two possible values of $\boldsymbol{\omega}$ at which the wheel must rotate. The block has a mass of 50 kg.

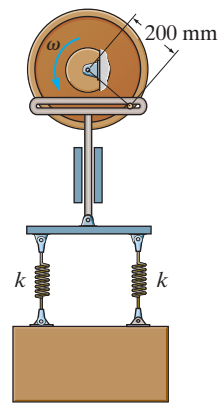

SOLUTION

In this case, $k_{eq} = 2k = 2(2500) = 5000$ N/m Thus, the natural circular frequency of the system is

$$\omega_n = \sqrt{\frac{k_{eq}}{m}} = \sqrt{\frac{5000}{50}} = 10 \text{ rad/s}$$

Here, $\delta_O = 0.2$ m and $(Y_P)_{\max} = \pm 0.4$ m, so that

$$(Y_P)_{\max} = \frac{\delta_O}{1 - \left(\frac{\omega}{\omega_n}\right)^2}$$

$$\pm 0.4 = \frac{0.2}{1 - \left(\frac{\omega}{10}\right)^2}$$

$$\frac{\omega^2}{100} = 1 \pm 0.5$$

Thus,

$$\frac{\omega^2}{100} = 1.5 \qquad \omega = 12.2 \text{ rad/s} \qquad \textbf{Ans.}$$

or

$$\frac{\omega^2}{100} = 0.5 \qquad \omega = 7.07 \text{ rad/s} \qquad \textbf{Ans.}$$

Ans:
$\omega = 12.2$ rad/s
$\omega = 7.07$ rad/s

Engineering Mechanics Dynamics 14th edition Hibbeler Solutions Manual

© 2016 Pearson Education, Inc., Upper Saddle River, NJ. All rights reserved. This material is protected under all copyright laws as they currently exist. No portion of this material may be reproduced, in any form or by any means, without permission in writing from the publisher.

***22–64.**

The spring system is connected to a crosshead that oscillates vertically when the wheel rotates with a constant angular velocity of $\omega = 5$ rad/s. If the amplitude of the steady-state vibration is observed to be 400 mm, determine the two possible values of the stiffness k of the springs. The block has a mass of 50 kg.

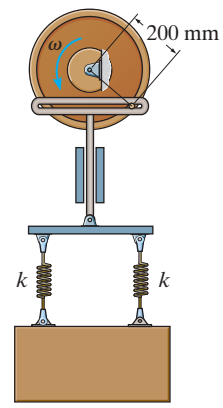

SOLUTION

In this case, $k_{eq} = 2k$ Thus, the natural circular frequency of the system is

$$\omega_n = \sqrt{\frac{k_{eq}}{m}} = \sqrt{\frac{2k}{50}} = \sqrt{0.04k}$$

Here, $\delta_O = 0.2$ m and $(Y_P)_{\max} = \pm 0.4$ m, so that

$$(Y_P)_{\max} = \frac{\delta_O}{1 - \left(\frac{\omega}{\omega_n}\right)^2}$$

$$\pm 0.4 = \frac{0.2}{1 - \left(\frac{5}{\sqrt{0.04k}}\right)^2}$$

$$\frac{625}{k} = 1 \pm 0.5$$

Thus,

$$\frac{625}{k} = 1.5 \qquad k = 417 \text{ N/m} \qquad \textbf{Ans.}$$

or

$$\frac{625}{k} = 0.5 \qquad k = 1250 \text{ N/m} \qquad \textbf{Ans.}$$

Ans:
$k = 417$ N/m
$k = 1250$ N/m

Engineering Mechanics Dynamics 14th edition Hibbeler Solutions Manual

© 2016 Pearson Education, Inc., Upper Saddle River, NJ. All rights reserved. This material is protected under all copyright laws as they currently exist. No portion of this material may be reproduced, in any form or by any means, without permission in writing from the publisher.

22–65.

A 7-lb block is suspended from a spring having a stiffness of $k = 75$ lb/ft. The support to which the spring is attached is given simple harmonic motion which may be expressed as $\delta = (0.15 \sin 2t)$ ft, where t is in seconds. If the damping factor is $c/c_c = 0.8$, determine the phase angle ϕ of forced vibration.

SOLUTION

$$\omega_n = \sqrt{\frac{k}{m}} = \sqrt{\frac{75}{\left(\frac{7}{32.2}\right)}} = 18.57$$

$$\delta = 0.15 \sin 2t$$

$$\delta_0 = 0.15, \omega = 2$$

$$\phi' = \tan^{-1}\left(\frac{2\left(\frac{c}{c_c}\right)\left(\frac{\omega}{\omega_n}\right)}{1 - \left(\frac{\omega}{\omega_n}\right)^2}\right) = \tan^{-1}\left(\frac{2(0.8)\left(\frac{2}{18.57}\right)}{1 - \left(\frac{2}{18.57}\right)^2}\right)$$

$$\phi' = 9.89° \qquad \textbf{Ans.}$$

Ans:
$\phi' = 9.89°$

Engineering Mechanics Dynamics 14th edition Hibbeler Solutions Manual

© 2016 Pearson Education, Inc., Upper Saddle River, NJ. All rights reserved. This material is protected under all copyright laws as they currently exist. No portion of this material may be reproduced, in any form or by any means, without permission in writing from the publisher.

22–66.

Determine the magnification factor of the block, spring, and dashpot combination in Prob. 22–65.

SOLUTION

$$\omega_n = \sqrt{\frac{k}{m}} = \sqrt{\frac{75}{\left(\frac{7}{32.2}\right)}} = 18.57$$

$$\delta = 0.15 \sin 2t$$

$$\delta_0 = 0.15, \quad \omega = 2$$

$$\text{MF} = \frac{1}{\sqrt{\left[1 - \left(\frac{\omega}{\omega_n}\right)^2\right]^2 + \left[2\left(\frac{c}{c_n}\right)\left(\frac{\omega}{\omega_n}\right)\right]^2}} = \frac{1}{\sqrt{\left[1 - \left(\frac{2}{18.57}\right)^2\right]^2 + \left[2(0.8)\left(\frac{2}{18.57}\right)\right]^2}}$$

$$\text{MF} = 0.997 \qquad \textbf{Ans.}$$

Ans:
MF = 0.997

Engineering Mechanics Dynamics 14th edition Hibbeler Solutions Manual

© 2016 Pearson Education, Inc., Upper Saddle River, NJ. All rights reserved. This material is protected under all copyright laws as they currently exist. No portion of this material may be reproduced, in any form or by any means, without permission in writing from the publisher.

22–67.

A block having a mass of 7 kg is suspended from a spring that has a stiffness $k = 600$ N/m. If the block is given an upward velocity of 0.6 m/s from its equilibrium position at $t = 0$, determine its position as a function of time. Assume that positive displacement of the block is downward and that motion takes place in a medium which furnishes a damping force $F = (50|v|)$ N, where v is in m/s.

SOLUTION

$$c = 50 \text{ N s/m} \quad k = 600 \text{ N/m} \quad m = 7 \text{ kg}$$

$$\omega_n = \sqrt{\frac{k}{m}} = \sqrt{\frac{600}{7}} = 9.258 \text{ rad/s}$$

$$c_c = 2m\omega_n = 2(7)(9.258) = 129.6 \text{ N}\cdot\text{s/m}$$

Since $c < c_z$, the system is underdamped,

$$\omega_d = \omega_n \sqrt{1 - \left(\frac{c}{c_c}\right)^2} = 9.258 \sqrt{1 - \left(\frac{50}{129.6}\right)^2} = 8.542 \text{ rad/s}$$

$$\frac{c}{2m} = \frac{50}{2(7)} = 3.751$$

From Eq. 22-32

$$y = D\left[e^{-\left(\frac{c}{2m}\right)t} \sin(\omega_d t + \phi)\right]$$

$$v = \dot{y} = D\left[e^{-\left(\frac{c}{2m}\right)t}\,\omega_d \cos(\omega_d t + \phi) + \left(-\frac{c}{2m}\right) e^{-\left(\frac{c}{2m}\right)t} \sin(\omega_d t + \phi)\right]$$

$$v = De^{-\left(\frac{c}{2m}\right)t}\left[\omega_d \cos(\omega_d t + \phi) - \frac{c}{2m}\sin(\omega_d t + \phi)\right]$$

Applying the initial condition at $t = 0$, $y = 0$ and $v = -0.6$ m/s.

$$0 = D[e^{-0} \sin(0 + \phi)] \qquad \text{since} \quad D \neq 0$$

$$\sin\phi = 0 \qquad \phi = 0°$$

$$-0.6 = De^{-0}[8.542 \cos 0° - 0]$$

$$D = -0.0702 \text{ m}$$

$$y = [-0.0702\, e^{-3.57t} \sin(8.540)] \text{ m} \qquad \textbf{Ans.}$$

Ans:
$y = \{-0.0702\, e^{-3.57t} \sin(8.540)\}$ m

Engineering Mechanics Dynamics 14th edition Hibbeler Solutions Manual

© 2016 Pearson Education, Inc., Upper Saddle River, NJ. All rights reserved. This material is protected under all copyright laws as they currently exist. No portion of this material may be reproduced, in any form or by any means, without permission in writing from the publisher.

***22–68.**

The 200-lb electric motor is fastened to the midpoint of the simply supported beam. It is found that the beam deflects 2 in. when the motor is not running. The motor turns an eccentric flywheel which is equivalent to an unbalanced weight of 1 lb located 5 in. from the axis of rotation. If the motor is turning at 100 rpm, determine the amplitude of steady-state vibration. The damping factor is $c/c_c = 0.20$. Neglect the mass of the beam.

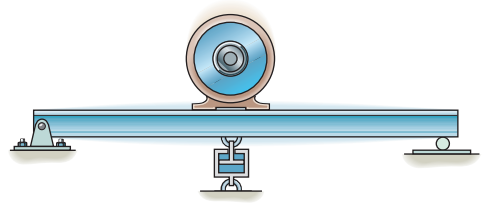

SOLUTION

$$\delta = \frac{2}{12} = 0.167 \text{ ft}$$

$$\omega = 100\left(\frac{2\pi}{60}\right) = 10.47 \text{ rad/s}$$

$$k = \frac{200}{\frac{2}{12}} = 1200 \text{ lb/ft}$$

$$F_O = mr\omega^2 = \left(\frac{1}{32.2}\right)\left(\frac{5}{12}\right)(10.47)^2 = 1.419 \text{ lb}$$

$$p = \sqrt{\frac{k}{m}} = \sqrt{\frac{1200}{\frac{200}{32.2}}} = 13.90 \text{ rad/s}$$

$$C' = \frac{\frac{F_0}{k}}{\sqrt{\left[1 - \left(\frac{\omega}{p}\right)^2\right]^2 + \left[2\left(\frac{c}{c_c}\right)\left(\frac{\omega}{p}\right)\right]^2}}$$

$$= \frac{\frac{1.419}{1200}}{\sqrt{\left[1 - \left(\frac{10.47}{13.90}\right)^2\right]^2 + \left[2(0.20)\left(\frac{10.47}{13.90}\right)\right]^2}}$$

$$= 0.00224 \text{ ft}$$

$$C' = 0.0269 \text{ in.}$$ **Ans.**

Ans:
$C' = 0.0269$ in.

Engineering Mechanics Dynamics 14th edition Hibbeler Solutions Manual

© 2016 Pearson Education, Inc., Upper Saddle River, NJ. All rights reserved. This material is protected under all copyright laws as they currently exist. No portion of this material may be reproduced, in any form or by any means, without permission in writing from the publisher.

22–69.

Two identical dashpots are arranged parallel to each other, as shown. Show that if the damping coefficient $c < \sqrt{mk}$, then the block of mass m will vibrate as an underdamped system.

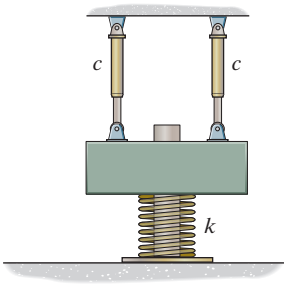

SOLUTION

When the two dash pots are arranged in parallel, the piston of the dashpots have the same velocity. Thus, the force produced is

$$F = c\dot{y} + c\dot{y} = 2c\dot{y}$$

The equivalent damping coefficient c_{eq} of a single dashpot is

$$c_{eq} = \frac{F}{\dot{y}} = \frac{2c\dot{y}}{\dot{y}} = 2c$$

For the vibration to occur (underdamped system), $c_{eq} < c_c$. However, $c_c = 2m\omega_n = 2m\sqrt{\frac{k}{m}}$. Thus,

$$c_{eq} < c_c$$

$$2c < 2m\sqrt{\frac{k}{m}}$$

$$c < \sqrt{mk} \qquad \textbf{Ans.}$$

Ans:
$F = 2c\dot{y}$
$c_c = 2m\sqrt{\frac{k}{m}}$
$c < \sqrt{mk}$

Engineering Mechanics Dynamics 14th edition Hibbeler Solutions Manual

© 2016 Pearson Education, Inc., Upper Saddle River, NJ. All rights reserved. This material is protected under all copyright laws as they currently exist. No portion of this material may be reproduced, in any form or by any means, without permission in writing from the publisher.

22–70.

The damping factor, c/c_c, may be determined experimentally by measuring the successive amplitudes of vibrating motion of a system. If two of these maximum displacements can be approximated by x_1 and x_2, as shown in Fig. 22–16, show that $\ln\ x_1/x_2 = 2\pi(c/c_c)/\sqrt{1-(c/c_c)^2}$. The quantity $\ln\ x_1/x_2$ is called the *logarithmic decrement*.

SOLUTION

Using Eq. 22–32,

$$x = D\left[e^{-\left(\frac{c}{2m}\right)t}\sin(\omega_d t + \phi)\right]$$

The maximum displacement is

$$x_{max} = De^{-\left(\frac{c}{2m}\right)t}$$

At $t = t_1$, and $t = t_2$

$$x_1 = De^{-\left(\frac{c}{2m}\right)t_1}$$

$$x_2 = De^{-\left(\frac{c}{2m}\right)t2}$$

Hence,

$$\frac{x_1}{x_2} = \frac{De^{-\left(\frac{c}{2m}\right)t1}}{De^{-\left(\frac{c}{2m}\right)t_2} = e^{-\left(\frac{c}{2m}\right)(t_1-t_2)}}$$

Since $\omega_d t_2 - \omega_d t_1 = 2\pi$

then $t_2 - t_1 = \dfrac{2\pi}{\omega_d}$

so that $\ln\left(\dfrac{x_1}{x_2}\right) = \dfrac{c\pi}{m\omega_d}$

Using Eq. 22–33, $c_c = 2m\omega_n$

$$\omega_d = \omega_n\sqrt{1-\left(\frac{c}{c_c}\right)^2} = \frac{c_c}{2m}\sqrt{1-\left(\frac{c}{c_r}\right)^2}$$

So that,

$$\ln\left(\frac{x_1}{x_2}\right) = \frac{2\pi\left(\dfrac{c}{c_c}\right)}{\sqrt{1-\left(\dfrac{c}{c_c}\right)^2}}$$

Q.E.D.

Ans:

$$\text{In}\left(\frac{x_1}{x_2}\right) = \frac{2\pi\left(\dfrac{c}{c_c}\right)}{\sqrt{1-\left(\dfrac{c}{c_c}\right)^2}}$$

Engineering Mechanics Dynamics 14th edition Hibbeler Solutions Manual

© 2016 Pearson Education, Inc., Upper Saddle River, NJ. All rights reserved. This material is protected under all copyright laws as they currently exist. No portion of this material may be reproduced, in any form or by any means, without permission in writing from the publisher.

22–71.

If the amplitude of the 50-lb cylinder's steady-state vibration is 6 in., determine the wheel's angular velocity ω.

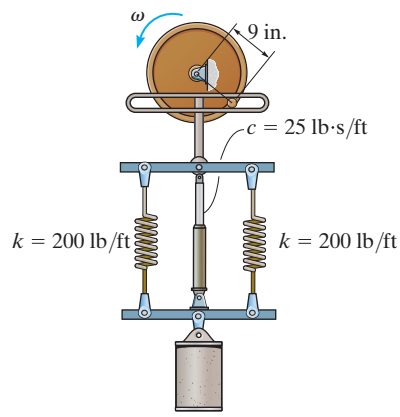

SOLUTION

In this case, $Y = \frac{6}{12} = 0.5$ ft, $\delta_O = \frac{9}{12} = 0.75$ ft, and $k_{eq} = 2k = 2(200) = 400$ lb/ft. Then

$$\omega_n = \sqrt{\frac{k_{eq}}{m}} = \sqrt{\frac{400}{(50/32.2)}} = 16.05 \text{ rad/s}$$

$$c_c = 2m\omega_n = 2\left(\frac{50}{32.2}\right)(16.05) = 49.84 \text{ lb}\cdot\text{s/ft}$$

$$\frac{c}{c_c} = \frac{25}{49.84} = 0.5016$$

$$Y = \frac{\delta_O}{\sqrt{\left[1 - \left(\frac{\omega}{\omega_n}\right)^2\right]^2 + \left(\frac{2(c/c_c)\omega}{\omega_n}\right)^2}}$$

$$0.5 = \frac{0.75}{\sqrt{\left[1 - \left(\frac{\omega}{16.05}\right)^2\right]^2 + \left(\frac{2(0.5016)\omega}{16.05}\right)^2}}$$

$$15.07(10^{-6})\omega^4 - 3.858(10^{-3})\omega^2 - 1.25 = 0$$

Solving for the positive root of this equation,

$$\omega^2 = 443.16$$

$$\omega = 21.1 \text{ rad/s} \qquad \textbf{Ans.}$$

Ans:
$\omega = 21.1$ rad/s

Engineering Mechanics Dynamics 14th edition Hibbeler Solutions Manual

© 2016 Pearson Education, Inc., Upper Saddle River, NJ. All rights reserved. This material is protected under all copyright laws as they currently exist. No portion of this material may be reproduced, in any form or by any means, without permission in writing from the publisher.

***22–72.**

The block, having a weight of 12 lb, is immersed in a liquid such that the damping force acting on the block has a magnitude of $F = (0.7|v|)$ lb, where v is in ft/s. If the block is pulled down 0.62 ft and released from rest, determine the position of the block as a function of time. The spring has a stiffness of $k = 53$ lb/ft. Assume that positive displacement is downward.

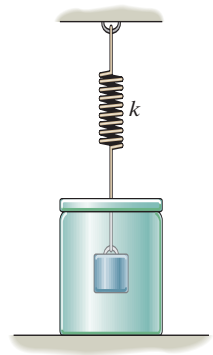

SOLUTION

$$c = 0.7 \text{ lb}\cdot\text{s/ft} \qquad k = 53 \text{ lb/ft} \qquad m = \frac{12}{32.2} = 0.3727 \text{ slug}$$

$$\omega_n = \sqrt{\frac{k}{m}} = \sqrt{\frac{53}{0.3727}} = 11.925 \text{ rad/s}$$

$$c_c = 2m\omega_n = 2(0.3727)(11.925) = 8.889 \text{ lb}\cdot\text{s/ft}$$

Since $c < c_c$ the system is underdamped.

$$\omega_d = \omega_n\sqrt{1 - \left(\frac{c}{c_c}\right)^2} = 11.925\sqrt{1 - \left(\frac{0.7}{8.889}\right)^2} = 11.888 \text{ rad/s}$$

$$\frac{c}{2m} = \frac{0.7}{2(0.3727)} = 0.9392$$

From Eq. 22–32 $y = D\left[e^{-\left(\frac{c}{2m}\right)t} \sin(\omega_d t + \phi)\right]$

$$v = \dot{y} = D\left[e^{-\left(\frac{c}{2m}\right)t}\omega_d \cos(\omega_d t + \phi) + \left(-\frac{c}{2m}\right)e^{-\left(\frac{c}{2m}\right)t} \sin(\omega_d t + \phi)\right]$$

$$v = De^{-\left(\frac{c}{2m}\right)t}\left[\omega_d \cos(\omega_d t + \phi) - \frac{c}{2m} \sin(\omega_d t + \phi)\right]$$

Appling the initial condition at $t = 0$, $y = 0.62$ ft and $v = 0$.

$$0.62 = D\left[e^{-0} \sin(0 + \phi)\right]$$

$$D \sin\phi = 0.62 \qquad \textbf{(1)}$$

$$0 = De^{-0}\left[11.888 \cos(0 + \phi) - 0.9392 \sin(0 + \phi)\right] \qquad \text{since } D \neq 0$$

$$11.888 \cos\phi - 0.9392 \sin\theta = 0 \qquad \textbf{(2)}$$

Solving Eqs. (1) and (2) yields:

$$\phi = 85.5° = 1.49 \text{ rad} \qquad D = 0.622 \text{ ft}$$

$$y = 0.622[e^{-0.939t} \sin(11.9t + 1.49)] \qquad \textbf{Ans.}$$

Ans:
$y = 0.622\,[e^{-0.939t} \sin(11.9t + 1.49)]$

Engineering Mechanics Dynamics 14th edition Hibbeler Solutions Manual

© 2016 Pearson Education, Inc., Upper Saddle River, NJ. All rights reserved. This material is protected under all copyright laws as they currently exist. No portion of this material may be reproduced, in any form or by any means, without permission in writing from the publisher.

22–73.

The bar has a weight of 6 lb. If the stiffness of the spring is $k = 8$ lb/ft and the dashpot has a damping coefficient $c = 60$ lb · s/ft, determine the differential equation which describes the motion in terms of the angle θ of the bar's rotation. Also, what should be the damping coefficient of the dashpot if the bar is to be critically damped?

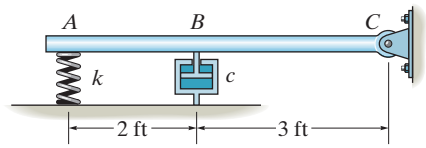

SOLUTION

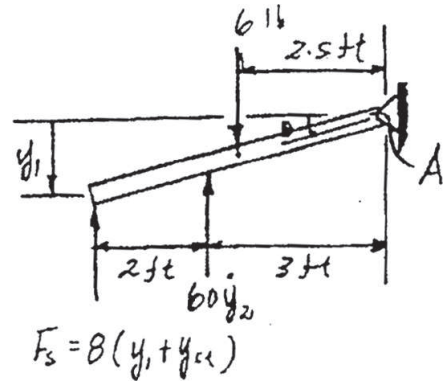

$$\circlearrowleft + \Sigma M_A = I_A\,\alpha; \qquad 6(2.5) - (60\dot{y}_2)(3) - 8(y_1 + y_{st})(5) = \left[\frac{1}{3}\left(\frac{6}{32.2}\right)(5)^2\right]\ddot{\theta}$$

$$1.5528\ddot{\theta} + 180\dot{y}_2 + 40y_1 + 40y_{st} - 15 = 0 \qquad \textbf{[1]}$$

From equilibrium $40y_{st} - 15 = 0$. Also, for small θ, $y_1 = 5\theta$ and $y_2 = 3\theta$ hence $\dot{y}_2 = 3\theta$.

From Eq. [1] $\qquad 1.5528\ddot{\theta} + 180(3\dot{\theta}) + 40(5\theta) = 0$

$$1.55\dot{\theta} + 540\dot{\theta} + 200\theta = 0 \qquad \textbf{Ans.}$$

By comparing the above differential equation to Eq. 22-27

$$m = 1.55 \qquad k = 200 \qquad \omega_n = \sqrt{\frac{200}{1.55}} = 11.35 \text{ rad/s} \qquad c = 9c_{d\cdot p}$$

$$\left(\frac{9\left(c_{d\cdot p}\right)_c}{2m}\right)^2 - \frac{k}{m} = 0$$

$$\left(c_{d\cdot p}\right)_c = \frac{2}{9}\sqrt{km} = \frac{2}{9}\sqrt{200(1.55)} = 3.92 \text{ lb}\cdot\text{s/ft} \qquad \textbf{Ans.}$$

Ans:
$1.55\ddot{\theta} + 540\dot{\theta} + 200\theta = 0$
$(c_{dp})_c = 3.92$ lb · s/ft

Engineering Mechanics Dynamics 14th edition Hibbeler Solutions Manual

© 2016 Pearson Education, Inc., Upper Saddle River, NJ. All rights reserved. This material is protected under all copyright laws as they currently exist. No portion of this material may be reproduced, in any form or by any means, without permission in writing from the publisher.

22–74.

A bullet of mass m has a velocity of $\mathbf{v}_0$ just before it strikes the target of mass M. If the bullet embeds in the target, and the vibration is to be critically damped, determine the dashpot's critical damping coefficient, and the springs' maximum compression. The target is free to move along the two horizontal guides that are "nested" in the springs.

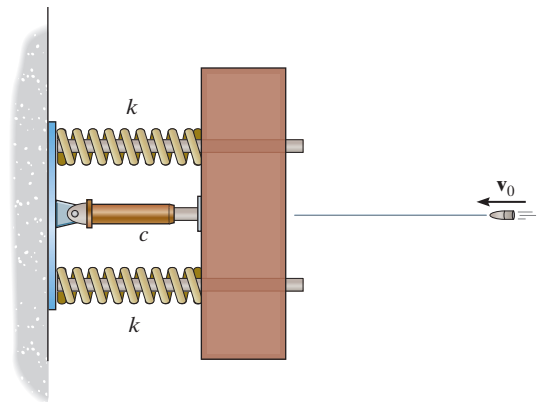

SOLUTION

Since the springs are arranged in parallel, the equivalent stiffness of the single spring system is $k_{eq} = 2k$. Also, when the bullet becomes embedded in the target, $m_T = m + M$. Thus, the natural frequency of the system is

$$\omega_n = \sqrt{\frac{k_{eq}}{m_T}} = \sqrt{\frac{2k}{m + M}}$$

When the system is critically damped

$$c = c_c = 2m_T\omega_n = 2(m + M)\sqrt{\frac{2k}{m + M}} = \sqrt{8(m + M)k} \qquad \textbf{Ans.}$$

The equation that describes the critically dampened system is

$$x = (A + Bt)e^{-\omega_n t}$$

When $t = 0$, $x = 0$. Thus,

$$A = 0$$

Then,

$$x = Bte^{-\omega_n t} \qquad \textbf{(1)}$$

Taking the time derivative,

$$v = \dot{x} = Be^{-\omega_n t} - B\omega_n te^{-\omega_n t}$$

$$v = Be^{-\omega_n t}(1 - \omega_n t) \qquad \textbf{(2)}$$

Since linear momentum is conserved along the horizontal during the impact, then

$$(\overset{+}{\leftarrow}) \qquad mv_0 = (m + M)v$$

$$v = \left(\frac{m}{m + M}\right)v_0$$

Here, when $t = 0$, $v = \left(\frac{m}{m + M}\right)v_0$. Thus, Eq. (2) gives

$$B = \left(\frac{m}{m + M}\right)v_0$$

And Eqs. (1) and (2) become

$$x = \left[\left(\frac{m}{m + M}\right)v_0\right]te^{-\omega_n t} \qquad \textbf{(3)}$$

$$v = \left[\left(\frac{m}{m + M}\right)v_0\right]e^{-\omega_n t}(1 - \omega_n t) \qquad \textbf{(4)}$$

Engineering Mechanics Dynamics 14th edition Hibbeler Solutions Manual

© 2016 Pearson Education, Inc., Upper Saddle River, NJ. All rights reserved. This material is protected under all copyright laws as they currently exist. No portion of this material may be reproduced, in any form or by any means, without permission in writing from the publisher.

22–74. Continued

The maximum compression of the spring occurs when the block stops. Thus, Eq. (4) gives

$$0 = \left[\left(\frac{m}{m + M}\right)v_0\right](1 - \omega_n t)$$

Since $\left(\frac{m}{m + M}\right)v_0 \neq 0$, then

$$1 - \omega_n t = 0$$

$$t = \frac{1}{\omega_n} = \sqrt{\frac{m + M}{2k}}$$

Substituting this result into Eq. (3)

$$x_{\max} = \left[\left(\frac{m}{m + M}\right)v_0\right]\left(\sqrt{\frac{m + M}{2k}}\right)e^{-1}$$

$$= \left[\frac{m}{e}\sqrt{\frac{1}{2k(m + M)}}\right]v_0 \qquad \textbf{Ans.}$$

Ans:
$c_c = \sqrt{8(m + M)k}$
$x_{\max} = \left[\frac{m}{e}\sqrt{\frac{1}{2k(m + M)}}\right]v_0$

Engineering Mechanics Dynamics 14th edition Hibbeler Solutions Manual

© 2016 Pearson Education, Inc., Upper Saddle River, NJ. All rights reserved. This material is protected under all copyright laws as they currently exist. No portion of this material may be reproduced, in any form or by any means, without permission in writing from the publisher.

22–75.

A bullet of mass m has a velocity $\mathbf{v}_0$ just before it strikes the target of mass M. If the bullet embeds in the target, and the dashpot's damping coefficient is $0 < c \ll c_c$, determine the springs' maximum compression. The target is free to move along the two horizontal guides that are "nested" in the springs.

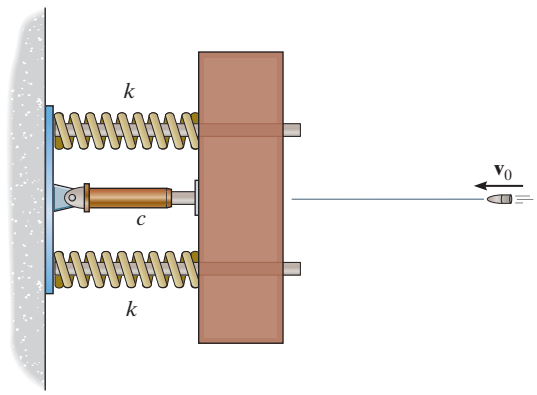

SOLUTION

Since the springs are arranged in parallel, the equivalent stiffness of the single spring system is $k_{eq} = 2k$. Also, when the bullet becomes embedded in the target, $m_T = m + M$. Thus, the natural circular frequency of the system

$$\omega_n = \sqrt{\frac{k_{eq}}{m_T}} = \sqrt{\frac{2k}{m + M}}$$

The equation that describes the underdamped system is

$$x = Ce^{-(c/2m_T)t} \sin(\omega_d t + \phi) \qquad \textbf{(1)}$$

When $t = 0$, $x = 0$. Thus, Eq. (1) gives

$$0 = C \sin \phi$$

Since $C \neq 0$, $\sin \phi = 0$. Then $\phi = 0$. Thus, Eq. (1) becomes

$$x = Ce^{-(c/2m_T)t} \sin \omega_d t \qquad \textbf{(2)}$$

Taking the time derivative of Eq. (2),

$$v = \dot{x} = C\left[\omega_d e^{-(c/2m_T)t} \cos \omega_d t - \frac{c}{2m_T} e^{-(c/2m_T)t} \sin \omega_d t\right]$$

$$v = Ce^{-(c/2m_T)t}\left[\omega_d \cos \omega_d t - \frac{c}{2m_T} \sin \omega_d t\right] \qquad \textbf{(3)}$$

Since linear momentum is conserved along the horizontal during the impact, then

$$(\overset{+}{\leftarrow}) \qquad mv_0 = (m + M)v$$

$$v = \left(\frac{m}{m + M}\right)v_0$$

When $t = 0$, $v = \left(\frac{m}{m + M}\right)v_0$. Thus, Eq. (3) gives

$$\left(\frac{m}{m + M}\right)v_0 = C\omega_d \qquad C = \left(\frac{m}{m + M}\right)\frac{v_0}{\omega_d}$$

And Eqs. (2) becomes

$$x = \left[\left(\frac{m}{m + M}\right)\frac{v_0}{\omega_d}\right]e^{-(c/2m_T)t} \sin \omega_d t \qquad \textbf{(4)}$$

Engineering Mechanics Dynamics 14th edition Hibbeler Solutions Manual

© 2016 Pearson Education, Inc., Upper Saddle River, NJ. All rights reserved. This material is protected under all copyright laws as they currently exist. No portion of this material may be reproduced, in any form or by any means, without permission in writing from the publisher.

22–75. Continued

The maximum compression of the spring occurs when

$$\sin \omega_d t = 1$$

$$\omega_d t = \frac{\pi}{2}$$

$$t = \frac{\pi}{2\omega_d}$$

Substituting this result into Eq. (4),

$$x_{\max} = \left[\left(\frac{m}{m + M}\right)\frac{v_0}{\omega_d}\right]e^{-[c/2(m + M)]\left(\frac{\pi}{2\omega_d}\right)}$$

However, $\omega_d = \sqrt{\frac{k_{eq}}{m_T} - \left(\frac{c}{2m_T}\right)^2} = \sqrt{\frac{2k}{m + M} - \frac{c^2}{4(m + M)^2}} = \frac{1}{2(m + M)}$ $\sqrt{8k(m + M) - c^2}$. Substituting this result into Eq. (5),

$$x_{\max} = \frac{2mv_0}{\sqrt{8k(m + M) - c^2}}e^{-\left[\frac{\pi c}{2\sqrt{8k(m + M) - c^2}}\right]}$$ **Ans.**

Ans:

$$x_{\max} = \frac{2mv_0}{\sqrt{8k(m + M) - c^2}}\, e^{-\pi c/(2\sqrt{8k(m+M)-c^2})}$$

Engineering Mechanics Dynamics 14th edition Hibbeler Solutions Manual

© 2016 Pearson Education, Inc., Upper Saddle River, NJ. All rights reserved. This material is protected under all copyright laws as they currently exist. No portion of this material may be reproduced, in any form or by any means, without permission in writing from the publisher.

***22–76.**

Determine the differential equation of motion for the damped vibratory system shown. What type of motion occurs? Take $k = 100$ N/m, $c = 200$ N·s/m, $m = 25$ kg.

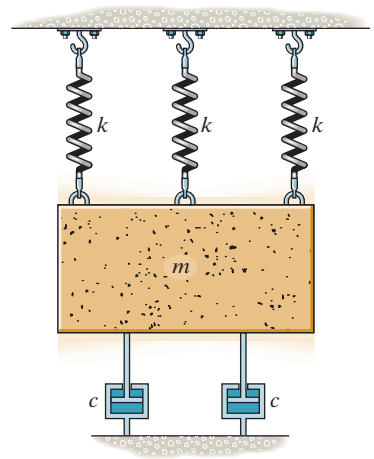

SOLUTION

Free-body Diagram: When the block is being displaced by an amount y vertically downward, the *restoring force* is developed by the three springs attached the block.

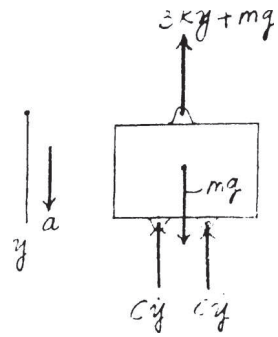

Equation of Motion:

$+\uparrow \Sigma F_x = 0;$ $\qquad 3ky + mg + 2c\dot{y} - mg = -m\ddot{y}$

$$m\ddot{y} + 2c\dot{y} + 3ky = 0 \qquad \textbf{(1)}$$

Here, $m = 25$ kg, $c = 200$ N·s/m and $k = 100$ N/m. Substituting these values into Eq. (1) yields

$$25\ddot{y} + 400\dot{y} + 300y = 0$$

$$\ddot{y} + 16\dot{y} + 12y = 0 \qquad \textbf{Ans.}$$

Comparing the above differential equation with Eq. 22–27, we have $m = 1$kg, $c = 16$ N·s/m and $k = 12$ N/m. Thus, $\omega_n = \sqrt{\frac{k}{m}} = \sqrt{\frac{12}{1}} = 3.464$ rad/s

$$c_c = 2m\omega_n = 2(1)(3.464) = 6.928 \text{ N·s/m}$$

Since $c > c_c$, the system will not vibrate. Therefore it is **overdamped.** **Ans.**

Ans:
$\ddot{y} + 16\dot{y} + 12y = 0$
Since $c > c_c$, the system will not vibrate. Therefore it is **overdamped.**

Engineering Mechanics Dynamics 14th edition Hibbeler Solutions Manual

© 2016 Pearson Education, Inc., Upper Saddle River, NJ. All rights reserved. This material is protected under all copyright laws as they currently exist. No portion of this material may be reproduced, in any form or by any means, without permission in writing from the publisher.

22–77.

Draw the electrical circuit that is equivalent to the mechanical system shown. Determine the differential equation which describes the charge q in the circuit.

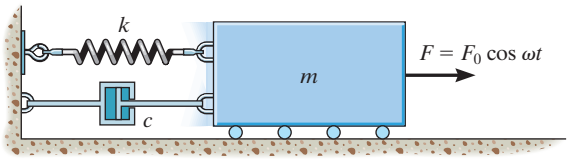

SOLUTION

For the block,

$$mx + cx + kx = F_0 \cos \omega t$$

Using Table 22–1,

$$Lq + Rq + \left(\frac{1}{C}\right)q = E_0 \cos \omega t \qquad \textbf{Ans.}$$

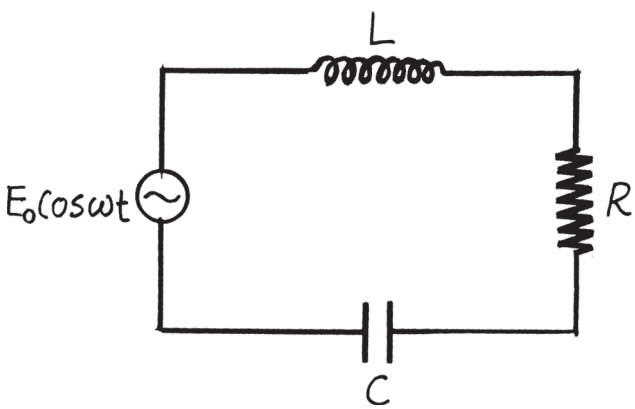

Ans:

$$Lq + Rq + \left(\frac{1}{C}\right)q = E_0 \cos \omega t$$

Engineering Mechanics Dynamics 14th edition Hibbeler Solutions Manual

© 2016 Pearson Education, Inc., Upper Saddle River, NJ. All rights reserved. This material is protected under all copyright laws as they currently exist. No portion of this material may be reproduced, in any form or by any means, without permission in writing from the publisher.

22–78.

Draw the electrical circuit that is equivalent to the mechanical system shown. What is the differential equation which describes the charge q in the circuit?

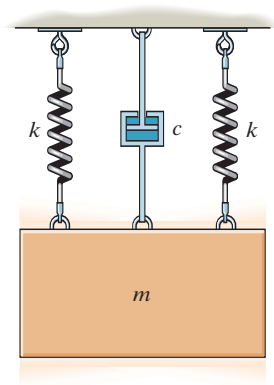

SOLUTION

For the block,

$$m\ddot{x} + c\dot{x} + 2k = 0$$

Using Table 22–1,

$$L\ddot{q} + R\dot{q} + \left(\frac{2}{C}\right)q = 0 \qquad \textbf{Ans.}$$

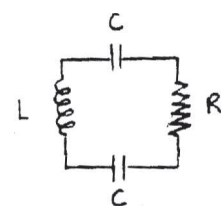

Ans:

$$L\ddot{q} + R\dot{q} + \left(\frac{2}{C}\right)q = 0$$

Engineering Mechanics Dynamics 14th edition Hibbeler Solutions Manual

© 2016 Pearson Education, Inc., Upper Saddle River, NJ. All rights reserved. This material is protected under all copyright laws as they currently exist. No portion of this material may be reproduced, in any form or by any means, without permission in writing from the publisher.

22–79.

Draw the electrical circuit that is equivalent to the mechanical system shown. Determine the differential equation which describes the charge q in the circuit.

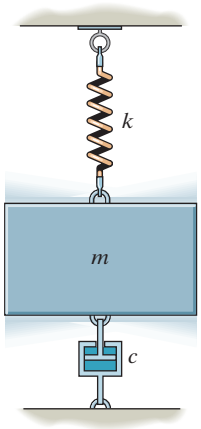

SOLUTION

For the block

$$m\ddot{y} + c\dot{y} + ky = 0$$

Using Table 22–1

$$L\ddot{q} + R\dot{q} + \frac{1}{C}q = 0 \qquad \textbf{Ans.}$$

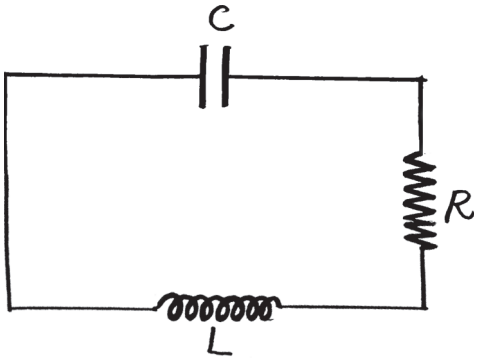

Ans:

$$L\ddot{q} + R\dot{q} + \frac{1}{C}q = 0$$

Engineering Mechanics Dynamics 14th edition Hibbeler Solutions Manual