Precalculus Functions and Graphs 4th edition Dugopolski Test Bank

SKU: 9780134265308-TEST-BANK

Precalculus Functions and Graphs 4th edition Dugopolski Test Bank

Determine whether each equation defines y as a function of x.

1. $x - 3y = 2$

1. _____

2. $x = y^2 - 2y + 1$

2. _____

State the domain and range of each relation.

3. $y = |2x - 3|$

3. *domain:* _____
*range:*_____

4. $x = \sqrt{y + 1}$

4. *domain:*_____
*range:*_____

Sketch the graph of each function.

5. $x + 2y = 4$

6. $y = \sqrt{x - 1}$

7. $y = -(x - 1)^2 - 2$

8. $f(x) = \begin{cases} x + 1, & for\ x < 2 \\ 2 - x, & for\ x \geq 2 \end{cases}$

Let $f(x) = x^2 + x$ and $g(x) = 2x + 1$. Find and simplify each of the following expressions.

9. $f(4)$

10. $g^{-1}(x)$

11. $(f \circ g)(2)$

12. $\frac{g(x+h)-g(x)}{h}$

9. _____ 10. _____ 11. _____ 12. _____

Copyright ©2013 Pearson Education. Inc.

Precalculus Functions and Graphs 4th edition Dugopolski Test Bank

Solve each problem.

13. State the intervals on which $f(x) = (x+3)^2 - 1$ is increasing.

13. _____

14. Discuss the symmetry of the graph of the function $f(x) = x^3 - x$.

14. _____

15. State the solution set to the inequality $(x-1)^2 > 1$ using interval notation.

15. _____

16. Pete's Print Shop charges \$60 for printing 300 business cards and \$80 for printing 500 business cards. What is the average rate of change of the cost of printing as the number of cards goes from 300 to 500?

16. _____

17. The area of a rectangle is 30 square feet. Write the perimeter of this rectangle as a function of the length of one of its sides, x.

17. _____

18. The grade on Walker's math test varies directly with the number of hours he spends studying for the test. If he studies only 2 hours, he makes a 62. What will his score be if he studies for 3 hours?

18. _____

Copyright ©2013 Pearson Education. Inc.

Precalculus Functions and Graphs 4th edition Dugopolski Test Bank

 Name: _____

Determine whether each equation defines y as a function of x.

1. $2x - 4y = 3$

1. _____

2. $x = |\, y \,|$

2. _____

State the domain and range of each relation.

3. $y = |\, 2x \,| + 1$

3. *domain:* _____
*range:*_____

4. $x = y^2 - 1$

4. *domain:*_____
*range:*_____

Sketch the graph of each function.

5. $3x - y = 3$

6. $y = \sqrt{x} + 2$

7. $f(x) = \begin{cases} 1 - x, & for\ x < 1 \\ 2x + 1, & for\ x \geq 1 \end{cases}$

8. $y = (x + 2)^2 + 1$

Let $f(x) = \sqrt{x+5}$ and $g(x) = 5x + 1$. Find and simplify each of the following.

9. $f(4)$ **10.** $g^{-1}(x)$ **11.** $(f \circ g)(2)$ **12.** $\frac{g(x+h)-g(x)}{h}$

9. _____ 10. _____ 11. _____ 12. _____

Copyright ©2013 Pearson Education. Inc.

Precalculus Functions and Graphs 4th edition Dugopolski Test Bank

Solve each problem.

13. State the intervals on which $f(x) = (x-1)^2 + 2$ is increasing.

13. _____

14. Discuss the symmetry of the graph of the function $f(x) = x^3 - x^2$.

14. _____

15. State the solution set to the inequality $(x+1)^2 < 1$ using interval notation.

15. _____

16. Pete's Print Shop charges \$50 for printing 500 business cards and \$90 for printing 1000 business cards. What is the average rate of change of the cost of printing as the number of cards goes from 500 to 1000?

16. _____

17. The perimeter of a rectangle is 10 square feet. Write the area of this rectangle as a function of the length of one of its sides, x.

17. _____

18. The grade on Walker's math test varies directly with the number of hours he spends studying for the test. If he studies only 2 hours, he makes a 50. What will his score be if he studies for 3 hours?

18. _____

Copyright ©2013 Pearson Education. Inc.

Precalculus Functions and Graphs 4th edition Dugopolski Test Bank

Determine whether each relation defines y as a function of x.

1. $\{(3,1),\ (2,4),\ (3,2)\}$

1. _____

2. $x^2 + y^2 = 1$

2. _____

State the domain and range of each relation.

3. $y = (x-1)^2 + 2$

3. *domain:* _____
*range:*_____

4. $f(x) = \begin{cases} -2x-3, & for\ x < 0 \\ x+1, & for\ x > 0 \end{cases}$

4. *domain:*_____
*range:*_____

Sketch the graph of each function.

5. $y = \frac{2}{3}x - 1$

6. $y = (x+2)^2 - 1$

7. $y = |x| - 3$

8. $y = \sqrt{16 - x^2}$

Let $f(x) = 2x^2 - x + 1$ and $g(x) = \sqrt{5-x}$. Find and simplify each of the following.

9. $g(-19)$

10. $g^{-1}(x)$

11. $(f \circ g)(4)$

12. $\frac{f(x+h)-f(x)}{h}$

9. _____ 10. _____ 11. _____ 12. _____

Copyright ©2013 Pearson Education. Inc.

Precalculus Functions and Graphs 4th edition Dugopolski Test Bank

Solve each problem.

13. State the intervals on which $f(x) = |x - 2| + 3$ is increasing.

13. _____

14. Let $f(x) = x - 2$, $g(x) = x^2$ and $h(x) = x - 1$. Write $m(x) = x^2 - 2x + 1$ as a composition of appropriate functions chosen from f, g, and h.

14. _____

15. State the solution set to the inequality $(x + 1)^2 < 1$ using interval notation.

15. _____

16. Jane's Advertising charges \$500 for 1200 flyers and \$780 for 1600 flyers. What is the average rate ofchange of the cost of the advertising as the number of flyers goes from 1200 to 1600?

16. _____

17. Write the area of a square as a function of the length of one of its diagonals, d.

17. _____

18. The cost of constructing a 5-foot by 7-foot deck is \$192.50. If the cost varies jointly as the length and width, then what does an 8-foot by 10-foot deck cost?

18. _____

Copyright ©2013 Pearson Education. Inc.

Precalculus Functions and Graphs 4th edition Dugopolski Test Bank

Determine whether each relation defines y as a function of x.

1. $\{(3,2),\ (2,3),\ (1,3)\}$

1. _____

2. $x^2 + y = 5$

2. _____

State the domain and range of each relation.

3. $y = \sqrt{4 - x^2}$

3. *domain:* _____
*range:*_____

4. $g(x) = \begin{cases} x - 1, & for\ x > 3 \\ 2x - 7, & for\ x \le 3 \end{cases}$

4. *domain:*_____
*range:*_____

Sketch the graph of each function.

5. $y = -\frac{1}{3}x$

6. $y = -(x-3)^2 + 1$

7. $y = x^2 + 3$

8. $y = \sqrt{25 - x^2}$

Let $f(x) = x^2 + x$ and $g(x) = 2x + 1$. Find and simplify each of the following.

9. $(f+g)(2)$

10. $g^{-1}(x)$

11. $(f \circ g)(-1)$

12. $\frac{f(x+h)-f(x)}{h}$

9. _____ 10. _____ 11. _____ 12. _____

Copyright ©2013 Pearson Education. Inc.

Precalculus Functions and Graphs 4th edition Dugopolski Test Bank

Solve each problem.

13. State the intervals on which $f(x) = 2 - x^2$ is increasing.

13. _____

14. Let $f(x) = (x-3)^{-1/2}$, $g(x) = 2x + 3$ and $h(x) = \sqrt{2x}$. Write $m(x) = \frac{1}{\sqrt{2x}}$ as a composition of appropriate functions chosen from f, g, and h.

14. _____

15. State the solution set to the inequality $(x+4)^2 < 1$ using interval notation.

15. _____

16. Jane's Advertising charges \$500 for 1200 flyers and \$820 for 1600 flyers. What is the average rate of change of the cost of the advertising as the number of flyers goes from 1200 to 1600?

16. _____

17. Write the area of a square as a function of the length of one of its diagonals, d.

17. _____

18. The cost of constructing a 5-foot by 7-foot deck is \$148.75. If the cost varies jointly as the length and width, then what does an 8-foot by 10-foot deck cost?

18. _____

Copyright ©2013 Pearson Education. Inc.

Precalculus Functions and Graphs 4th edition Dugopolski Test Bank

Multiple Choice: Choose the best answer for each of the following.

_____ **1.** **Which of the following define y as a function of x?**

A. $y = |x - 2| + 1$ **C.** $x = 2$ **E.** $x = |y|$
B. $4x - 2y = 3$ **D.** $x^2 + y^2 = 4$ **F.** $x^3 + y = 2$

a. A, B, E b. A, C, E c. B, D, F d. A, B, F

_____ **2.** **What is the domain of the relation: $y = \sqrt{x+1}$?**

a. $[-1, \infty)$ b. $[0, \infty)$ c. $[1, \infty)$ d. $(-\infty, \infty)$

_____ **3.** **Find x, if $f(x) = \sqrt{x-3}$ and $f(x) = 3$.**

a. 0 b. 12 c. undefined d. 6

_____ **4.** **Determine the range of $f(x) = \begin{cases} x+1, & for\ x \geq 0 \\ -x+2, & for\ x < 0 \end{cases}$.**

a. $[1, \infty)$ b. $(-\infty, \infty)$ c. $(-\infty, 0) \cup (0, \infty)$ d. $[1, 2)$

_____ **5.** **Explain how to use the graph of $y = x^2$ to get the graph of $y = (x+2)^2$.**

a. Translate 2 units left c. Translate 2 units right
b. Translate 2 units down d. Translate 2 units up

_____ **6.** **Solve the inequality $|x - 1| - 2 \leq 0$ by using its graph.**

a. $(-\infty, 3]$ b. $[-1, 3]$ c. $(-\infty, -1] \cup [3, \infty)$ d. $[3, \infty)$

_____ **7.** **Find the domain of $f + g$ if $f = \{(-1, 0), (-2, 4), (3, 6)\}$ and $g = \{(-1, 0), (0, 5), (3, 2)\}$.**

a. $\{-1, 3\}$ b. $\{-1, -2, 0, 3\}$ c. $\{-1, 0, 3\}$ d. $\{-1, -2, 3\}$

_____ **8.** **If $f(x) = x^2 - 1$ and $g(x) = x + 1$, find $\left(\frac{f}{g}\right)(-1)$.**

a. 0 b. -2 c. $-x - 1$ d. undefined

_____ **9.** **The area of a rectangle is 20 square feet. Write the perimeter of this rectangle as a function of the length of *one* of its sides, x.**

a. $P = 2x + 2\left(\frac{20}{x}\right)$ c. $P = 2x + 2y - 20$
b. $P = 2x + 2(10 - x)$ d. $P = 2x + 2y$

Copyright ©2013 Pearson Education. Inc.

Precalculus Functions and Graphs 4th edition Dugopolski Test Bank

_____ **10.** **Use f^{-1} to find the range of $f(x) = \frac{2x-1}{x+3}$.**

a. $(-\infty, -3) \cup (-3, \infty)$
b. $(-\infty, 0) \cup (0, \infty)$
c. $(-\infty, 2) \cup (2, \infty)$
d. $(-\infty, \frac{1}{2}) \cup (\frac{1}{2}, \infty)$

_____ **11.** **Express the radius of a circle, r, as a function of its circumference C, given $C = \pi d$, where d is the diameter of the circle.**

a. $r = \frac{C}{2\pi}$
b. $C = \pi r^2$
c. $r = \sqrt{\frac{C}{\pi}}$
d. $r = \frac{C}{\pi}$

_____ **12.** **Find the constant of variation for the following: c varies inversely as the square of t and $c = 4$ when $t = 5$.**

a. 20
b. 100
c. $\frac{5}{4}$
d. $\frac{25}{4}$

_____ **13.** **Write a formula with the appropriate variation constant that describes the variation of the length of a building in yards (y) with the length of a building in inches (n).**

a. $y = 36n$
b. $n = \frac{36}{y}$
c. $y = \frac{36}{n}$
d. $n = 36y$

_____ **14.** **Find $(f \circ g)(x)$ if $f(x) = x^2 - 1$and $g(x) = 3x + 5$.**

a. $3x^2 + 2$
b. $3x^2 + 10x + 8$
c. $9x^2 + 30x + 24$
d. $-\frac{4}{3}$ and -3

_____ **15.** **If a function is even, then it is:**

a. level
b. not invertible
c. symmetric to the x-axis
d. symmetric to the origin

_____ **16.** **If $g(x) = \frac{x-1}{2x+3}$, find $g^{-1}(x)$.**

a. $\frac{3x+1}{1-2x}$
b. $\frac{2x+3}{x-1}$
c. $2xy + 3x + 1$
d. $\frac{3x+1}{-2x}$

_____ **17.** **Determine the symmetry of the graph of $f(x) = x^3 + 4x$.**

a. Symmetric to the y-axis
b. Symmetric to $x = 4$
c. Symmetric to the origin
d. No symmetry

_____ **18.** **Jane's Advertising charges \$500 for 1200 flyers and \$780 for 1800 flyers. What is the average rate of change of the cost of the advertising as the number of flyers goes from 1200 to 1800?**

a. \$280.00
b. \$0.23
c. \$0.16
d. \$0.47

Copyright ©2013 Pearson Education. Inc.

Precalculus Functions and Graphs 4th edition Dugopolski Test Bank

Multiple Choice: Choose the best answer for each of the following.

_____ **1.** **Which of the following define y as a function of x?**

A. $y = |x - 2| + 1$ **C.** $x = 2$ **E.** $x = |y|$
B. $4x - 2y = 3$ **D.** $x^2 + y^2 = 4$ **F.** $x^3 + y = 2$

a. B, D, F b. A, C, E c. A, B, F d. A, B, E

_____ **2.** **What is the domain of the relation: $y = \sqrt{x - 1}$?**

a. $[-1, \infty)$ b. $[0, \infty)$ c. $[1, \infty)$ d. $(-\infty, \infty)$

_____ **3.** **Find x, if $f(x) = \sqrt{x - 4}$ and $f(x) = 3$.**

a. 13 b. 0 c. undefined d. 7

_____ **4.** **Determine the range of $f(x) = \begin{cases} x + 1, & for\ x \geq 0 \\ -x + 2, & for\ x < 0 \end{cases}$.**

a. $[1, 2)$ b. $(-\infty, \infty)$ c. $(-\infty, 0) \cup (0, \infty)$ d. $[1, \infty)$

_____ **5.** **Explain how to use the graph of $y = x^2$ to get the graph of $y = x^2 - 2$.**

a. Translate 2 units left c. Translate 2 units right
b. Translate 2 units down d. Translate 2 units up

_____ **6.** **Solve the inequality $|x + 2| - 1 \leq 0$ by using its graph.**

a. $(-\infty, -1]$ b. $[1, 3]$ c. $(-\infty, -3] \cup [1, \infty)$ d. $[-3, -1]$

_____ **7.** **Find the domain of $f + g$ if $f = \{(-1, 0), (-2, 4), (3, 6)\}$ and $g = \{(-1, 0), (0, 5), (3, 2)\}$.**

a. $\{-1, -2, 3\}$ b. $\{-1, -2, 0, 3\}$ c. $\{-1, 0, 3\}$ d. $\{-1, 3\}$

_____ **8.** **If $f(x) = x^2 - 1$ and $g(x) = x + 1$, find $\left(\frac{f}{g}\right)(-1)$.**

a. 0 b. -2 c. undefined d. $-x - 1$

_____ **9.** **The area of a rectangle is 20 square feet. Write the perimeter of this rectangle as a function of the length of *one* of its sides, x.**

a. $P = 2x + 2(10 - x)$ c. $P = 2x + 2y$
b. $P = 2x + 2\left(\frac{20}{x}\right)$ d. $P = 2x + 2y - 20$

Copyright ©2013 Pearson Education. Inc.

Precalculus Functions and Graphs 4th edition Dugopolski Test Bank

_____ **10.** **Use f^{-1} to find the range of $f(x) = \frac{3x-1}{x+2}$.**

a. $(-\infty, 3) \cup (3, \infty)$
b. $(-\infty, 0) \cup (0, \infty)$
c. $(-\infty, 2) \cup (2, \infty)$
d. $(-\infty, \frac{1}{2}) \cup (\frac{1}{2}, \infty)$

_____ **11.** **Express the radius of a circle, r, as a function of its circumference C, given $C = \pi d$, where d is the diameter of the circle.**

a. $r = \sqrt{\frac{C}{\pi}}$
b. $C = \pi r^2$
c. $r = \frac{C}{2\pi}$
d. $r = \frac{C}{\pi}$

_____ **12.** **Find the constant of variation for the following: c varies inversely as the square of t and $c = 4$ when $t = 5$.**

a. 100
b. 20
c. $\frac{5}{4}$
d. $\frac{25}{4}$

_____ **13.** **Write a formula with the appropriate variation constant that describes the variation of the length of a building in yards (y) with the length of a building in inches (n).**

a. $n = \frac{36}{y}$
b. $y = \frac{36}{n}$
c. $n = 36y$
d. $y = 36n$

_____ **14.** **Find $(f \circ g)(x)$ if $f(x) = x^2 - 1$and $g(x) = 3x + 5$.**

a. $3x^2 + 2$
b. $9x^2 + 30x + 24$
c. $3x^2 + 10x + 8$
d. $-\frac{4}{3}$ and -3

_____ **15.** **If a function is even, then it is:**

a. level
b. symmetric to the x-axis
c. not invertible
d. symmetric to the origin

_____ **16.** **If $g(x) = \frac{x-1}{2x+3}$, find $g^{-1}(x)$.**

a. $\frac{2x+3}{x-1}$
b. $\frac{3x+1}{1-2x}$
c. $2xy + 3x + 1$
d. $\frac{3x+1}{-2x}$

_____ **17.** **Determine the symmetry of the graph of $f(x) = x^2 + 4x$.**

a. Symmetric to the y-axis
b. Symmetric to $x = -2$
c. Symmetric to the origin
d. No symmetry

_____ **18.** **Jane's Advertising charges $500 for 1200 flyers and $780 for 1800 flyers. What is the average rate of change of the cost of the advertising as the number of flyers goes from 1200 to 1800?**

a. $0.16
b. $0.47
c. $280.00
d. $0.23

Copyright ©2013 Pearson Education. Inc.

Precalculus Functions and Graphs 4th edition Dugopolski Test Bank

CHAPTER 2

Form A:

1. Yes **2.** No **3.** d: $(-\infty, \infty)$, r: $[0, \infty)$ **4.** d: $[0, \infty)$, r: $[-1, \infty)$

5.

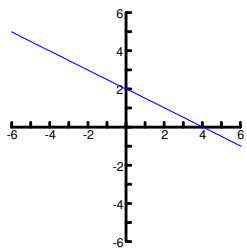

6.

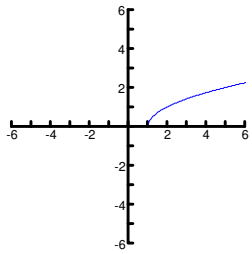

7.

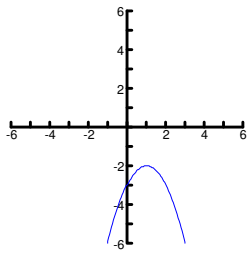

8. open circle at (2, 3)

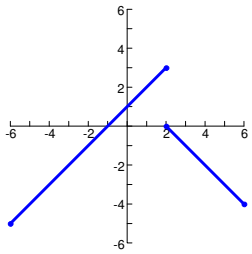

9. 20 **10.** $\frac{x-1}{2}$ **11.** 30 **12.** 2 **13.** $(-3, \infty)$

14. symmetric about the origin **15.** $(-\infty, 0) \cup (2, \infty)$ **16.** 10¢ per card

17. $P = 2x + \left(\frac{60}{x}\right)$ **18.** 93

Form B:

1. Yes **2.** No **3.** d: $(-\infty, \infty)$, r: $[1, \infty)$ **4.** d: $[-1, \infty)$, r: $(-\infty, \infty)$

5.

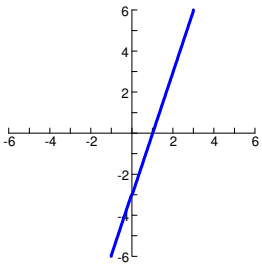

6.

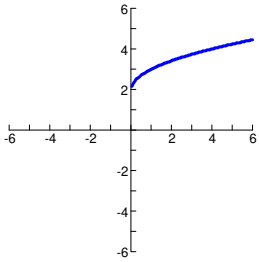

7. open circle at (1, 0)

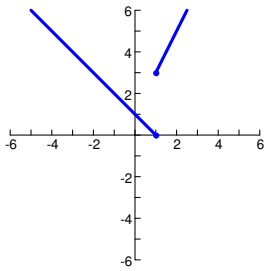

8.

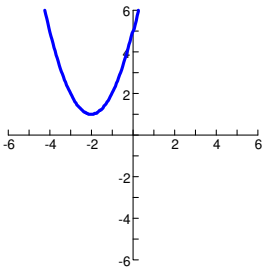

9. 3 **10.** $\frac{x-1}{5}$ **11.** 4 **12.** 5 **13.** $(1, \infty)$

14. not symmetric to x-axis, y-axis, or origin **15.** $(-2, 0)$ **16.** 8¢ per card

17. $A = 5x - x^2$ **18.** 75

Copyright ©2013 Pearson Education. Inc.

Precalculus Functions and Graphs 4th edition Dugopolski Test Bank

Form C:

1. No **2.** No **3.** d: $(-\infty, \infty)$, r: $[2, \infty)$ **4.** d: $(-\infty, 0) \cup (0, \infty)$, r: $(-3, \infty)$

5.

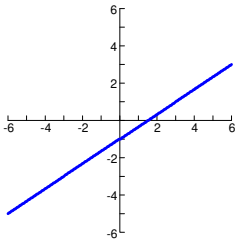

6.

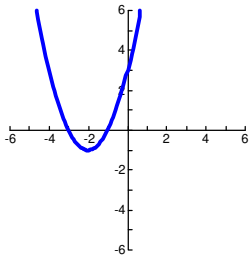

7.

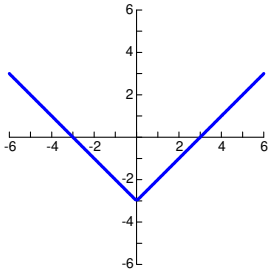

8.

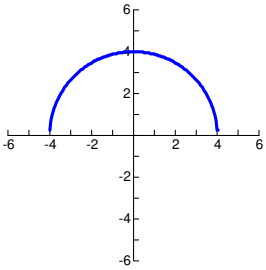

9. $2\sqrt{6}$ **10.** $5 - x^2$, for $x \geq 0$ **11.** 2 **12.** $4x + 2h - 1$ **13.** $(2, \infty)$

14. $(g \circ h)(x)$ **15.** $(-2, 0)$ **16.** 70¢ per flyer **17.** $A = \frac{1}{2}d^2$ **18.** \$440

Form D:

1. Yes **2.** Yes **3.** d: $[-2, 2]$, r: $[0, 2]$ **4.** d: $(-\infty, \infty)$, r: $(-\infty, -1] \cup (2, \infty)$

5.

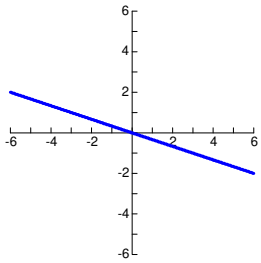

6.

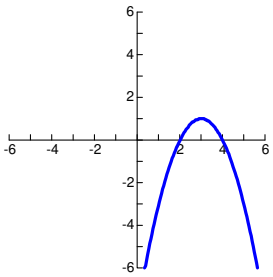

7.

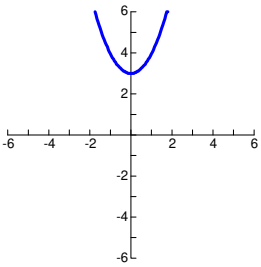

8.

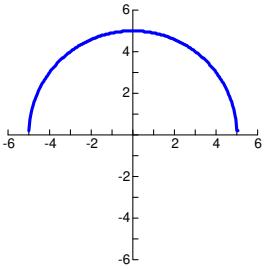

9. 11 **10.** $\frac{x-1}{2}$ **11.** 0 **12.** $2x + h + 1$ **13.** $(-\infty, 0)$ **14.** $(f \circ g)(x)$

15. $(-5, -3)$ **16.** 80¢ per flyer **17.** $A = \frac{1}{2}d^2$ **18.** \$340

Form E:

1. d **2.** a **3.** b **4.** a **5.** a **6.** b **7.** a **8.** d **9.** a
10. c **11.** a **12.** b **13.** d **14.** c **15.** b **16.** a **17.** c **18.** d

Form F:

1. c **2.** c **3.** a **4.** d **5.** b **6.** d **7.** d **8.** c **9.** b
10. a **11.** c **12.** a **13.** c **14.** b **15.** c **16.** b **17.** d **18.** b

Copyright ©2013 Pearson Education. Inc.

Precalculus Functions and Graphs 4th edition Dugopolski Test Bank

MULTIPLE CHOICE. Choose the one alternative that best completes the statement or answers the question.

For the given pair of variables determine whether a is a function of b, b is a function of a, both, or neither.

1) a is the number of years of formal education of an adult living in the United States, and b is his or her age in years.

A) a is a function of b B) Both C) b is a function of a D) Neither

Answer: D

2) a is the radius of any spherical bowling ball, and b is its volume.

A) b is a function of a B) Both C) Neither D) a is a function of b

Answer: B

3) a is the savings account number of a customer at a bank, and b is the number of years the account has been active.

A) Neither B) b is a function of a C) a is a function of b D) Both

Answer: B

Use the vertical line test to determine whether y is a function of x.

4)

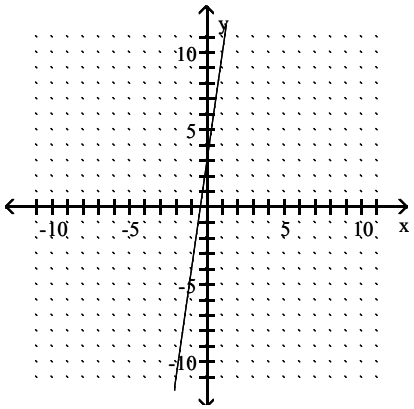

A) No B) Yes

Answer: B

5)

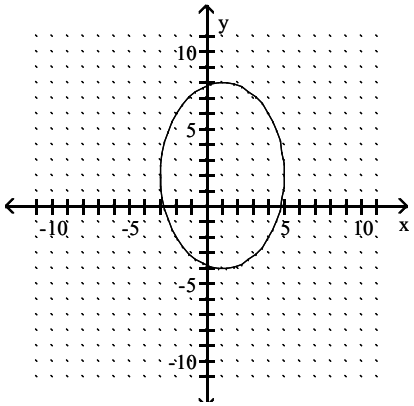

A) No B) Yes

Answer: A

Precalculus Functions and Graphs 4th edition Dugopolski Test Bank

6)

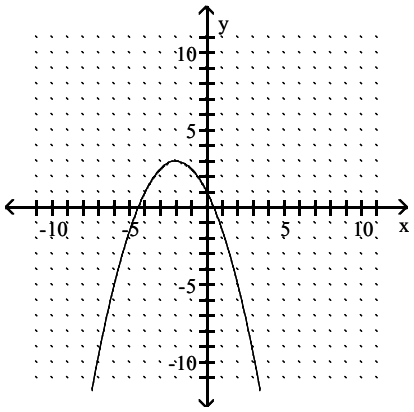

A) No B) Yes

Answer: B

7)

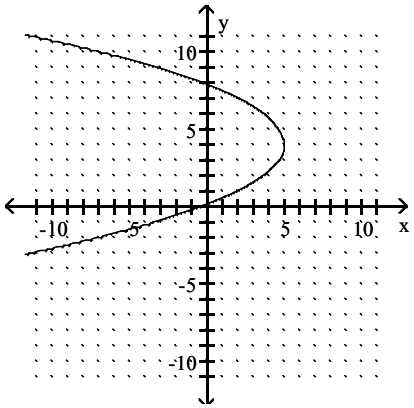

A) No B) Yes

Answer: A

8)

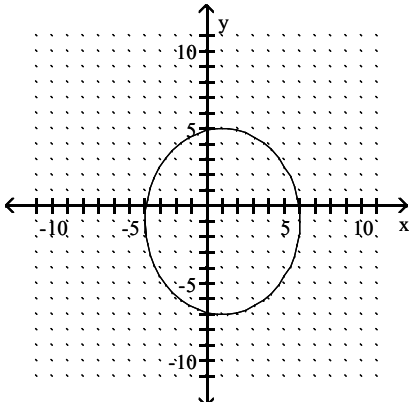

A) No B) Yes

Answer: A

Precalculus Functions and Graphs 4th edition Dugopolski Test Bank

9)

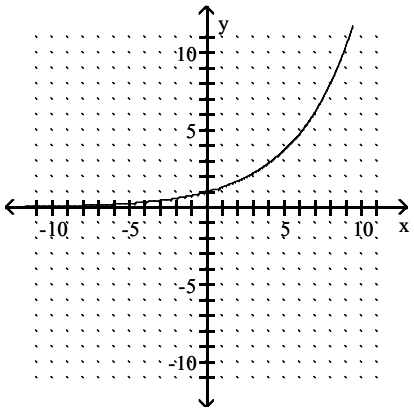

A) No B) Yes

Answer: B

10)

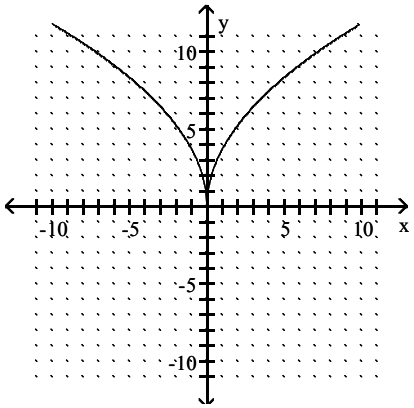

A) No B) Yes

Answer: B

Determine whether the relation is a function.

11) {(–1, –5), (2, 1), (5, –6), (7, 3), (10, 4)}

A) Yes B) No

Answer: A

12) {(–6, 7), (–3, –1), (3, 4), (3, –1)}

A) No B) Yes

Answer: A

13) {(–8, 8), (–8, 9), (–1, 6), (6, –1), (8, –9)}

A) No B) Yes

Answer: A

14) {(3, 1), (3, 8), (4, 7), (8, –6), (11, –1)}

A) No B) Yes

Answer: A

Precalculus Functions and Graphs 4th edition Dugopolski Test Bank

15) {(–5, 4), (–1, 3), (1, 4), (6, –5)}
A) Yes B) No
Answer: A

16) {(–7, 7), (–7, 6), (1, –7), (5, 7), (8, 2)}
A) Yes B) No
Answer: B

17) {(–6, 4), (–3, –9), (–1, 1), (4, –3)}
A) Yes B) No
Answer: A

18) {(–6, 1), (–3, –1), (2, 5), (2, –3)}
A) No B) Yes
Answer: A

19)

x	y
5	14
9	12
5	7
2	2

A) Yes B) No
Answer: B

20)

x	y
–2	7
–1	10
1	7
2	10

A) Yes B) No
Answer: A

Determine whether the equation defines y as a function of x.

21) $y = 9x + 5$
A) Yes B) No
Answer: A

22) $y = -x$
A) No B) Yes
Answer: B

23) $y = x^2 + 3$
A) Yes B) No
Answer: A

24) $x = y^3$
A) No B) Yes
Answer: B

Precalculus Functions and Graphs 4th edition Dugopolski Test Bank

25) $y = 8x^2 - 9x - 9$

A) No B) Yes

Answer: B

26) $y = 2$

A) No B) Yes

Answer: B

27) $x = y^2 - 2$

A) Yes B) No

Answer: B

28) $y^2 = (x - 3)(x + 9)$

A) No B) Yes

Answer: A

29) $y = \sqrt[4]{x}$

A) Yes B) No

Answer: B

30) $x = |4y|$

A) Yes B) No

Answer: B

Find the domain and range.

31) {(–5, –11), (–9, –10), (12, 7), (6, 2), (–3, 3)}

A) D = {3, 12, 7, 6, 2}; R = {–9, –10, –5, –11, –3}
B) D = {–9, –10, –5, –11, –3}; R = {3, 12, 7, 6, 2}
C) D = {–9, –5, –3, 12, 6}; R = {–10, –11, 3, 7, 2}
D) D = {–10, –11, 3, 7, 2}; R = {–9, –5, –3, 12, 6}

Answer: C

32) {(–4, 7), (–4, 6), (–9, –2), (–1, –4), (2, 3)}

A) D = {–9, –3, –1, –4, 2}; R = {–2, –4, 6, 3, 7}
B) D = {–2, –4, 6, 3, 7}; R = {–9, –9, –1, –4, 2}
C) D = {–9, –9, –1, –4, 2}; R = {–2, –4, 6, 3, 7}
D) D = {–9, –1, –4, 2}; R = {–2, –4, 6, 3, 7}

Answer: D

33) {(2, 1), (6, 3), (–6, 6), (–6, 8)}

A) D = {2, 6, –6, 6}; R = {1, 3, 6, 8}
B) D = {2, 6, –6}; R = {1, 3, 6, 8}
C) D = {1, 3, 6, 8}; R = {2, 6, –6}
D) D = {2, 6, –6, –6}; R = {1, 3, 6, 8}

Answer: B

34) {(9, –2), (–2, 2), (2, 3), (–3, 7)}

A) D = {–3, –2, 2, 9}; R = {7, 2, 2, 3, –2}
B) D = {–3, –2, 2, 9}; R = {7, 7, 2, 3, –2}
C) D = {–3, –2, 2, 9}; R = {7, 2, 3, –2}
D) D = {7, 2, 3, –2}; R = {–3, –2, 2, 9}

Answer: C

35) $y = 4x - 11$

A) D = (–∞, ∞); R = [0, ∞)
B) D = (–∞, ∞); R = [–11, ∞)
C) D = (–∞, ∞); R = (–∞, ∞)
D) D = [0, ∞); R = (–∞, ∞)

Answer: C

Precalculus Functions and Graphs 4th edition Dugopolski Test Bank

36) $y = 8x^6$

A) D = [0, ∞); R = [−8, ∞)
B) D = (−∞, ∞); R = [0, ∞)
C) D = (−∞, ∞); R = (-∞, ∞)
D) D = (−∞, ∞); R = [8, ∞)

Answer: B

37) $y = \sqrt{3 + x}$

A) D = (−∞, ∞); R = [−3, ∞)
B) D = (−∞, ∞); R = (−∞, ∞)
C) D = [−3, ∞); R = [0, ∞)
D) D = [0, ∞); R = (−∞, ∞)

Answer: C

38) $\{(x, y) \mid y = 7\}$

A) D = [0, ∞); R = [0, 7]
B) D = (−∞, ∞); R = (−∞, ∞)
C) D = (−∞, ∞); R = {7}
D) D = (−∞, ∞); R = {1}

Answer: C

39) $x = |y|$

A) D = (−∞, ∞); R = (−∞, ∞)
B) D = (−∞, ∞); R = [0, ∞)
C) D = [0, ∞); R = (−∞, ∞)
D) D = [0, ∞); R = [0, ∞)

Answer: C

Evaluate.

40) If $f(x) = (x - 7)^2$, find f(3).

A) −16
B) 100
C) −8
D) 16

Answer: D

41) If $f(x) = -|x + 4|$, find f(−9).

A) −13
B) 5
C) 13
D) −5

Answer: D

42) If $f(x) = 5x^2 - 4x - 2$, find f(6).

A) 156
B) 154
C) 174
D) 4

Answer: B

43) If $f(x) = x^3 + 6x^2 + 4x - 3$, find f(4).

A) 176
B) 53
C) 97
D) 173

Answer: D

44) If $f = \{(2, -6), (5, -3), (6, -1)\}$ and $g(x) = 4x + 9$, find f(5) + g(5).

A) 10
B) 26
C) 34
D) 62

Answer: B

45) Find g(a + 1) when $g(x) = \frac{1}{5}x - 3$.

A) $\frac{a - 14}{5}$
B) $\frac{a + 14}{5}$
C) $\frac{1}{5}a - 5$
D) $\frac{1}{5}a - 3$

Answer: A

Precalculus Functions and Graphs 4th edition Dugopolski Test Bank

46) Find $g(a - 1)$ when $g(x) = 4x + 2$.

A) $\frac{1}{4}a + 2$ B) $4a + 1$ C) $4a - 2$ D) $4a + 2$

Answer: C

47) Find $f(a + 3)$ when $f(x) = x^2 + 5$.

A) $a^2 + 6a + 9$ B) $a^2 + 8$ C) $a^2 + 9$ D) $a^2 + 6a + 14$

Answer: D

48) Find $f(k - 1)$ when $f(x) = 4x^2 + 5x - 3$.

A) $4k^2 - 3k - 4$ B) $-3k^2 + 4k - 4$ C) $4k^2 - 7k + 6$ D) $4k^2 - 3k + 6$

Answer: A

49) If $f(x) = 2x^2 + x$, find $f(x + h) - f(x)$.

A) $4xh + 2h^2$ B) $4xh + 2h^2 + 2x + h$ C) $4xh + 2h^2 + h$ D) $2h^2 + h$

Answer: C

Solve the problem.

50) A deep sea diving bell is being lowered at a constant rate. After 12 minutes, the bell is at a depth of 400 feet. After 50 minutes the bell is at a depth of 1600 feet. What is the average rate of lowering per minute?

A) 24.0 ft per minute B) 0.03 ft per minute C) 32.0 ft per minute D) 31.6 ft per minute

Answer: D

51) In January 1983, Anna starts a new job and makes an annual salary of $38,000. By January 1986 her annual salary has increased to $46,200, and by January 1996 it has increased to $240,200. What is the average rate of change of her salary between January 1986 and January 1996?

A) $25,220 per year B) $15,554 per year C) $20,220 per year D) $19,400 per year

Answer: D

Find the difference quotient, $\frac{f(x + h) - f(x)}{h}$, for the function and simplify it.

52) $f(x) = 7x - 11$

A) $-7h$ B) $\frac{11}{7}$ C) 7 D) 11

Answer: C

53) $g(x) = 10x^2 + 10x - 5$

A) $10x + 6 + 20h$ B) $20x + 10$ C) $20xh + 10h + 10h^2$ D) $20x + 10 + 10h$

Answer: D

54) $q(x) = \frac{15}{x + 13}$

A) $\frac{-15}{(x + h + 13)(x + 13)}$ B) $\frac{-195}{(x + h + 13)(x + 13)}$ C) $\frac{15}{(x + h + 13)(x + 13)}$ D) $\frac{-15}{(x + 15)^2}$

Answer: A

Precalculus Functions and Graphs 4th edition Dugopolski Test Bank

55) $a(x) = \sqrt{4x + 12}$

A) $\dfrac{2}{\sqrt{x + h + 3} - \sqrt{x + 3}}$

B) $\dfrac{2}{2\sqrt{x + 3}}$

C) $\dfrac{6}{\sqrt{x + h + 3} + \sqrt{x + 3}}$

D) $\dfrac{2}{\sqrt{x + h + 3} + \sqrt{x + 3}}$

Answer: D

56) $p(x) = 2 - 8x^3$

A) $-8(3x^2 + 3xh + h^2)$ B) $-6x^2$ C) $-8(3x^2 - 3x - h)$ D) $-8(x^2 - xh - h^2)$

Answer: A

Solve the problem.

57) Suppose that a rectangular yard has a width of x and a length of 8x. Write the perimeter P as a function of x.

A) $P = 18x$ B) $P = 8x^2$ C) $P = 9x$ D) $P = 18x^2$

Answer: A

58) Suppose that a circular coin has a circumference of C, a radius of r, and a diameter of d. Write C as a function of d.

A) $C = \pi d^2$ B) $C = 2\pi d$ C) $C = \dfrac{d}{\pi}$ D) $C = \pi d$

Answer: D

59) Elissa wants to set up a rectangular dog run in her backyard. She has 30 feet of fencing to work with and wants to use it all. If the dog run is to be x feet long, express the area of the dog run as a function of x.

A) $A = 14x - x^2$ B) $A = 15x - x^2$ C) $A = 17x^2 - x$ D) $A = 16x - x^2$

Answer: B

60) Bob wants to fence in a rectangular garden in his yard. He has 64 feet of fencing to work with and wants to use it all. If the garden is to be x feet wide, express the area of the garden as a function of x.

A) $A = 32x - x^2$ B) $A = 34x^2 - x$ C) $A = 31x - x^2$ D) $A = 33x - x^2$

Answer: A

61) Sue wants to put a rectangular garden on her property using 90 meters of fencing. There is a river that runs through her property so she decides to increase the size of the garden by using the river as one side of the rectangle. (Fencing is then needed only on the other three sides.) Let x represent the length of the side of the rectangle along the river. Express the garden's area as a function of x.

A) $A = 44x - \frac{1}{4}x^2$ B) $A = 46x - 2x^2$ C) $A = 45x^2 - x$ D) $A = 45x - \frac{1}{2}x^2$

Answer: D

62) A rectangular sign is being designed so that the length of its base, in feet, is 18 feet less than 4 times the height, h. Express the area of the sign as a function of h.

A) $A = -18h^2 + 2h$ B) $A = 18h - 2h^2$ C) $A = -18h + 4h^2$ D) $A = -18h + h^2$

Answer: C

Precalculus Functions and Graphs 4th edition Dugopolski Test Bank

63) Assume that the sales of a certain appliance dealer are approximated by a linear function. Suppose that sales were \$4500 in 1982 and \$63,000 in 1987. Let $x = 0$ represent 1982. Find the equation giving yearly sales $S(x)$.

A) $S(x) = 58{,}500x + 4500$
B) $S(x) = 58{,}500x + 63{,}000$
C) $S(x) = 11{,}700x + 63{,}000$
D) $S(x) = 11{,}700x + 4500$

Answer: D

64) Let $C(x) = 600 + 20x$ be the cost to manufacture x items. Find the average cost per item, to the nearest dollar, to produce 50 items.

A) \$248
B) \$1625
C) \$32
D) \$1550

Answer: C

65) Let $R(x) = -19x + 175$ represent the number of students present in a large class, where x represents the number of hours of study required weekly. What is the rate of change of the number of students in the class with respect to the number of hours of study?

A) –19
B) 19
C) 175
D) –175

Answer: A

66) The cost of manufacturing a molded part is related to the quantity of parts produced during a production run. When 100 parts are produced, the cost is \$300. When 300 parts are produced, the cost is \$1900. What is the average cost per part?

A) \$9.00 per part
B) \$0.13 per part
C) \$5.33 per part
D) \$8.00 per part

Answer: D

67) Suppose the sales of a particular brand of appliance satisfy the relationship $S(x) = 60x + 3300$, where $S(x)$ represents the number of sales in year x, with $x = 0$ corresponding to 1982. In what year would the sales be 3720?

A) 1986
B) 1989
C) 1987
D) 1988

Answer: B

68) The mathematical model $C = 700x + 50{,}000$ represents the cost in dollars a company has in manufacturing x items during a month. How many items were produced if costs reached \$470,000?

A) 469,300 items
B) 743 items
C) 600 items
D) 529 items

Answer: C

69) The revenue in dollars from the sale of concert tickets at x dollars each is given by the function $R(x) = 19{,}000x - 500x^2$. Find the difference quotient when $x = 20$ and $h = 0.1$. Interpret the result.

A) At 20 per ticket, revenue is increasing at \$105 per dollar change in ticket price.
B) At 20 per ticket, revenue is decreasing at \$105 per dollar change in ticket price.
C) At 20 per ticket, revenue is increasing at \$1050 per dollar change in ticket price.
D) At 20 per ticket, revenue is decreasing at \$1050 per dollar change in ticket price.

Answer: D

Precalculus Functions and Graphs 4th edition Dugopolski Test Bank

70) The amount of tin A (in square inches) needed to make a tin can with radius r inches and volume 23 cubic inches can be found by the function $A(r) = \frac{46}{r} + 2\pi r^2$. Find the difference quotient when r = 2.2 in. and h = 0.1. Use 3.14 for π. Interpret the result.

A) At r = 2.2 in., A is decreasing at 19.2 in.^{2} per 1 in. increase in r.

B) At r = 2.2 in., A is decreasing at 192 in.^{2} per 1 in. increase in r.

C) At r = 2.2 in., A is increasing at 192 in.^{2} per 1 in. increase in r.

D) At r = 2.2 in., A is increasing at 19.2 in.^{2} per 1 in. increase in r.

Answer: D

Graph the equation by plotting ordered pairs of numbers.

71) $-2x = y - 1$

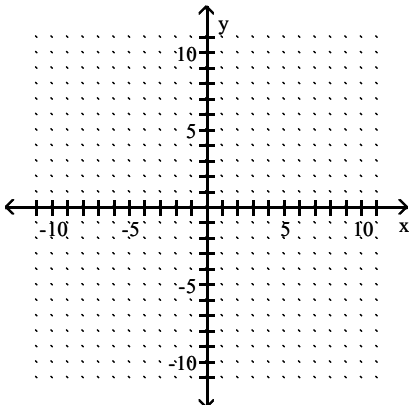

A)

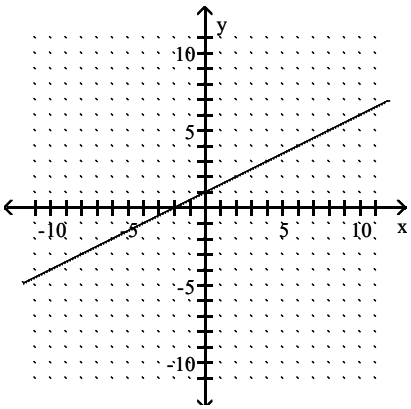

B)

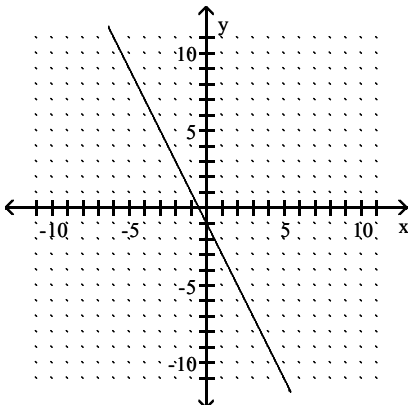

C)

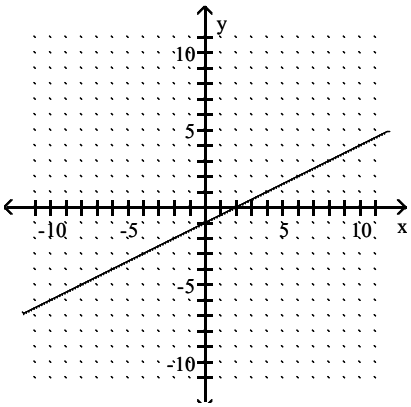

D)

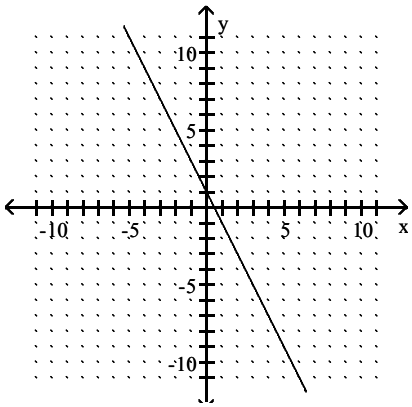

Answer: D

Precalculus Functions and Graphs 4th edition Dugopolski Test Bank

72) $y = \sqrt{x + 2}$

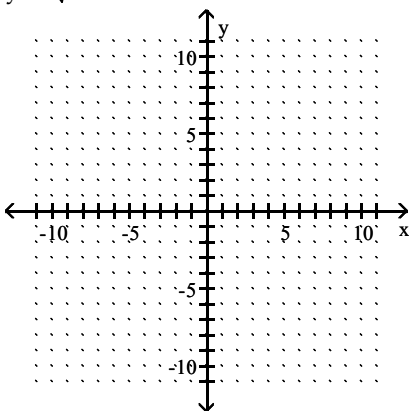

A)

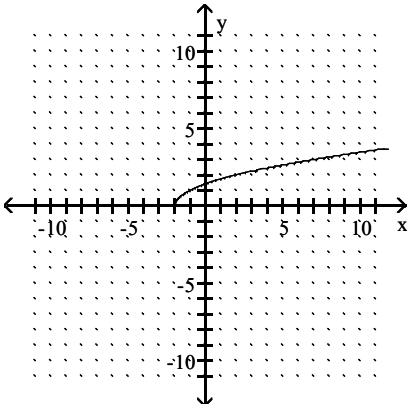

B)

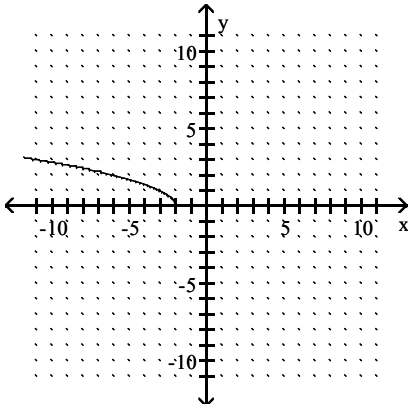

C)

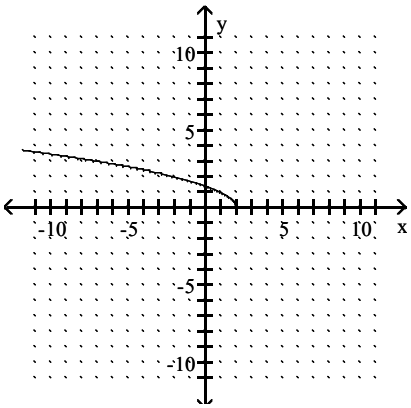

D)

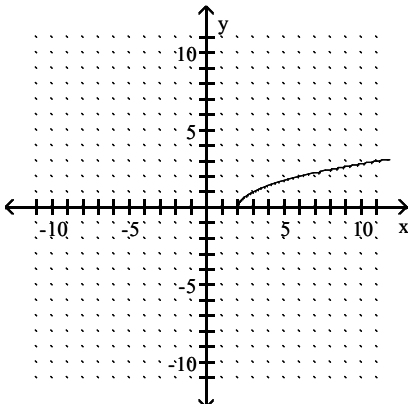

Answer: A

Precalculus Functions and Graphs 4th edition Dugopolski Test Bank

73) $y = -\sqrt{9 - x}$

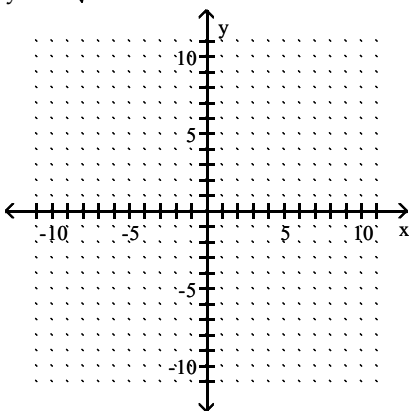

A)

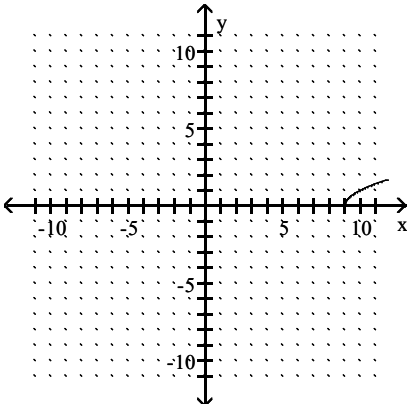

B)

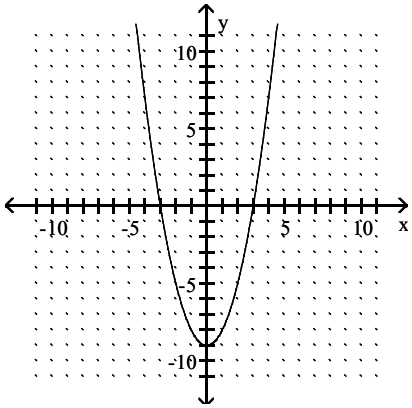

C)

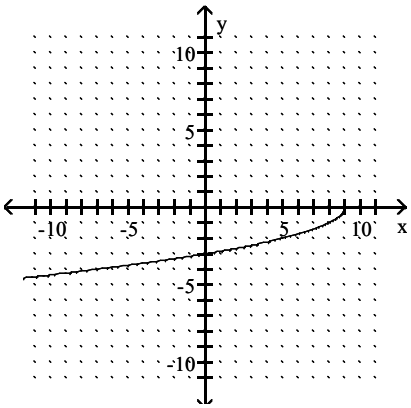

D)

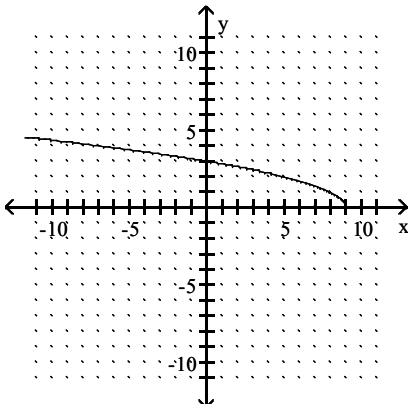

Answer: C

Precalculus Functions and Graphs 4th edition Dugopolski Test Bank

74) $y = |-4 - x|$

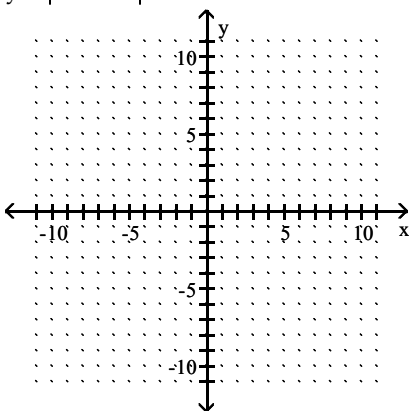

A)

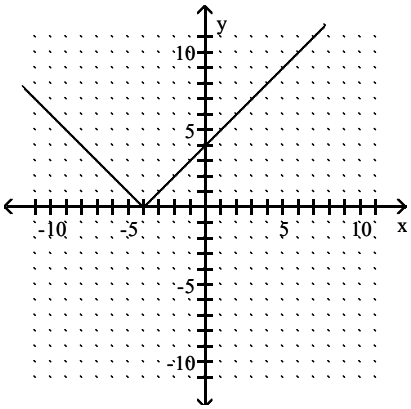

B)

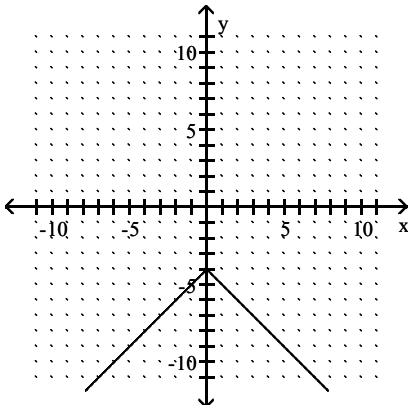

C)

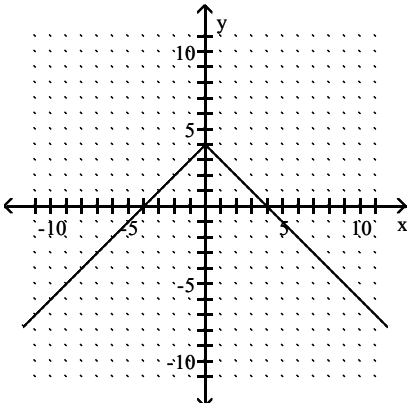

D)

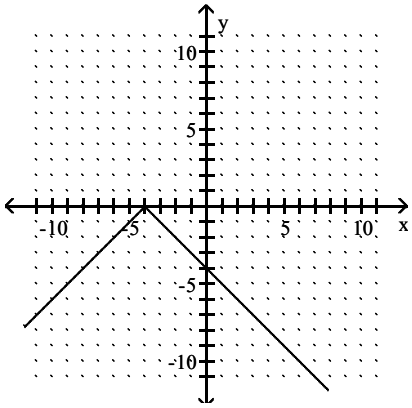

Answer: A

Precalculus Functions and Graphs 4th edition Dugopolski Test Bank

75) $y = 9|x| - 3$

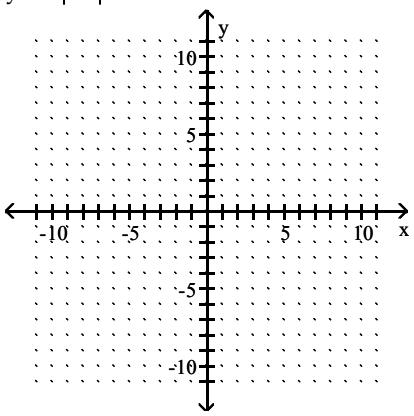

A)

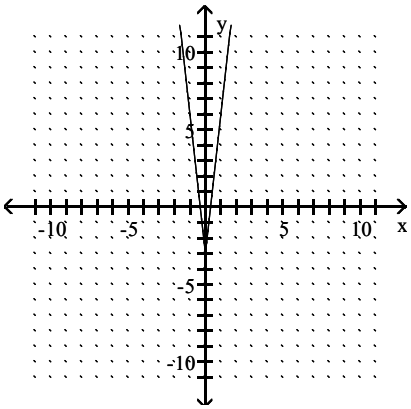

B)

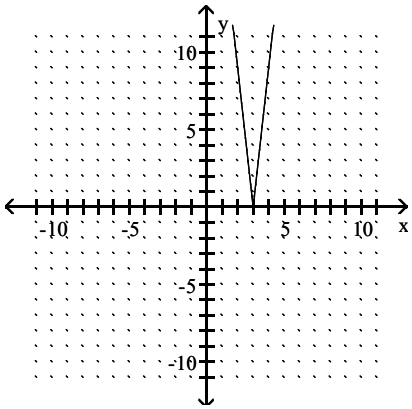

C)

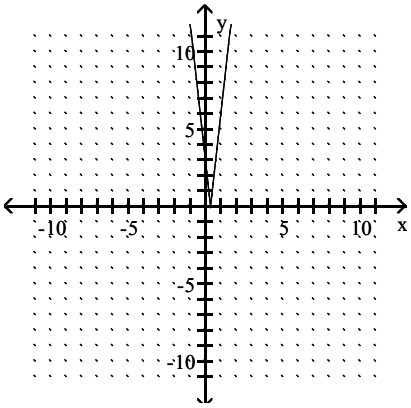

D)

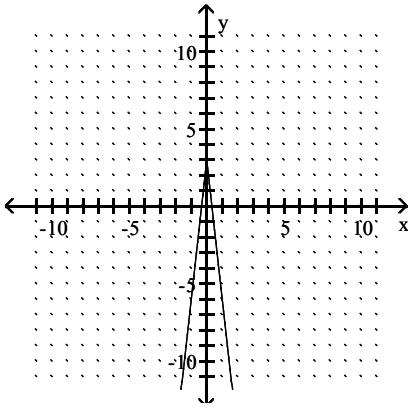

Answer: A

Precalculus Functions and Graphs 4th edition Dugopolski Test Bank

76) $y = \frac{1}{2}(x - 5)^4$

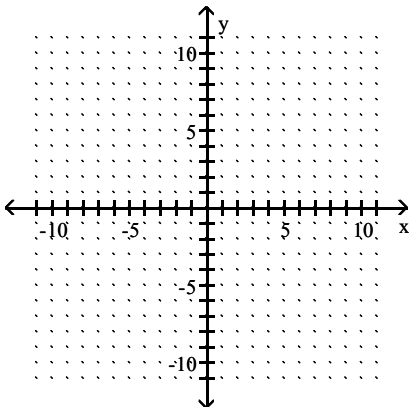

A)

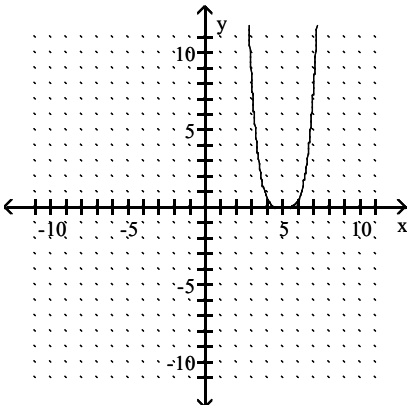

B)

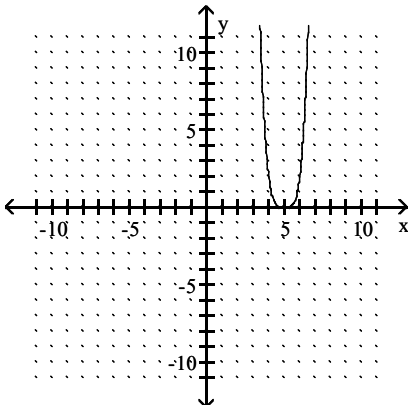

C)

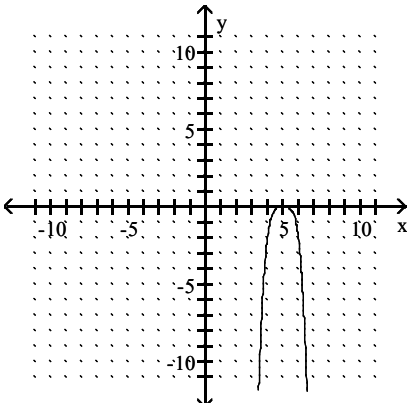

D)

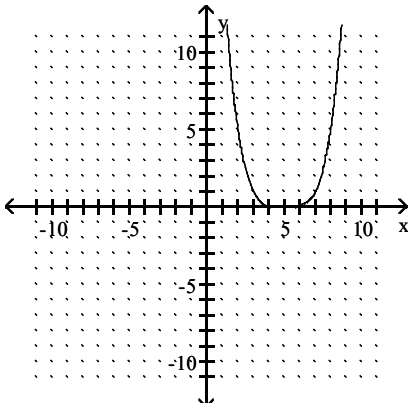

Answer: A

Precalculus Functions and Graphs 4th edition Dugopolski Test Bank

77) $y = -\frac{1}{3}(x - 3)^3 - 1$

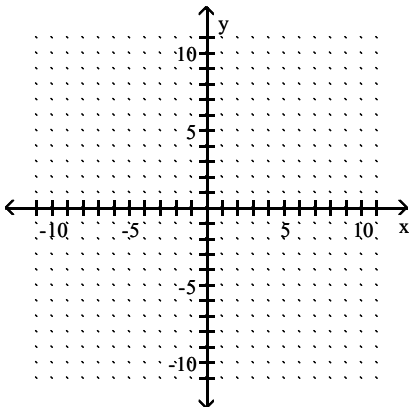

A)

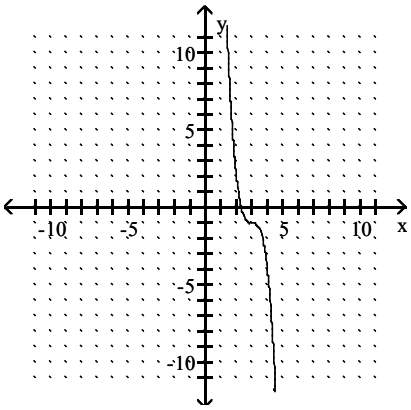

B)

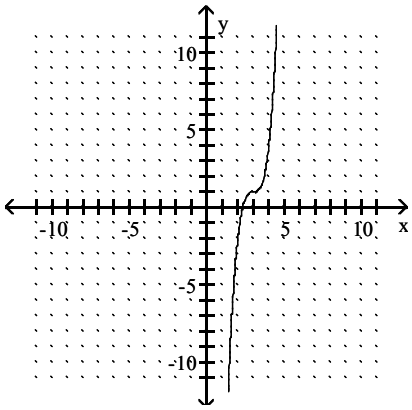

C)

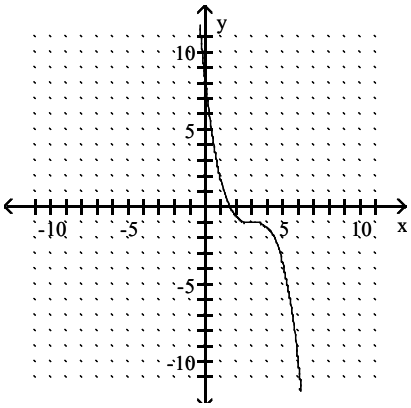

D)

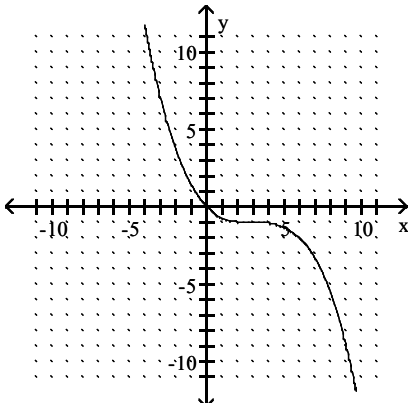

Answer: C

Graph the function.

Precalculus Functions and Graphs 4th edition Dugopolski Test Bank

78) $f(x) = \begin{cases} 3 & \text{for } x \geq 1 \\ -5 - x & \text{for } x < 1 \end{cases}$

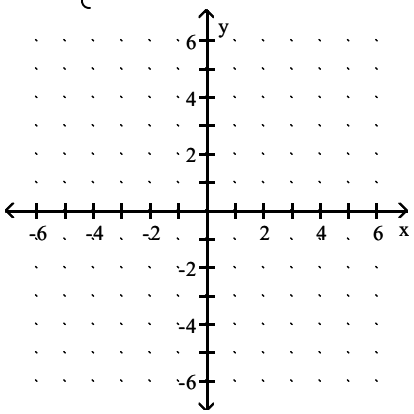

A)

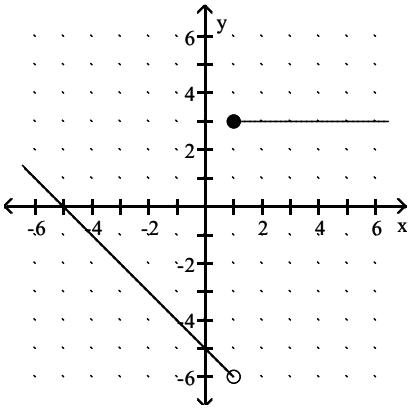

B)

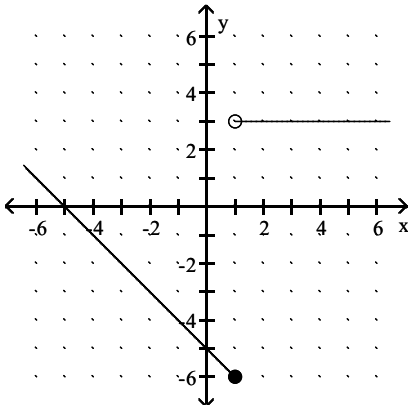

C)

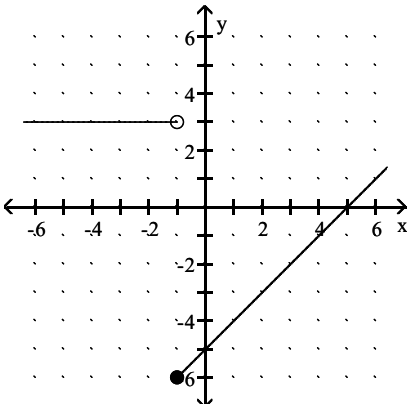

D)

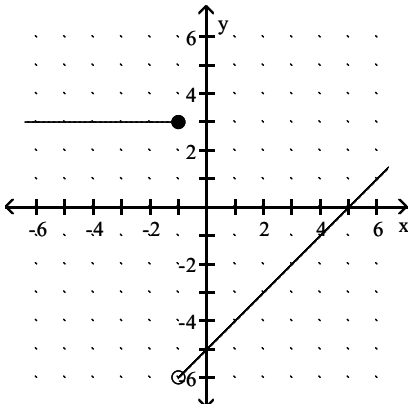

Answer: A

Precalculus Functions and Graphs 4th edition Dugopolski Test Bank

79) $f(x) = \begin{cases} x + 5 & \text{for } x > 0 \\ 4 & \text{for } x \le 0 \end{cases}$

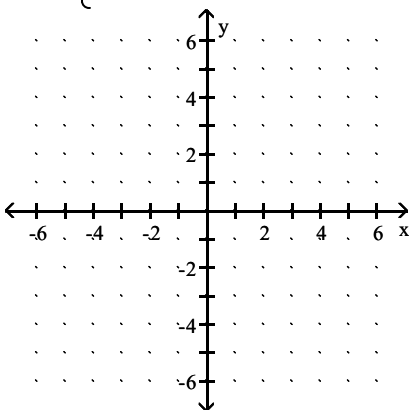

A)

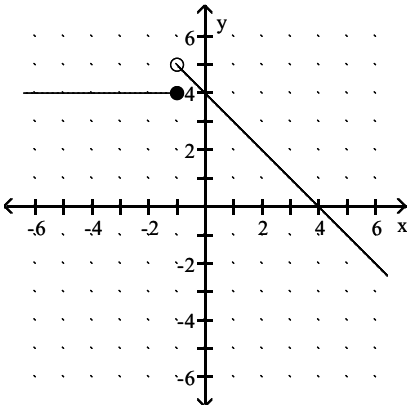

B)

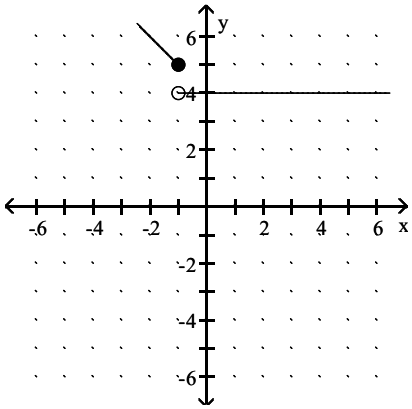

C)

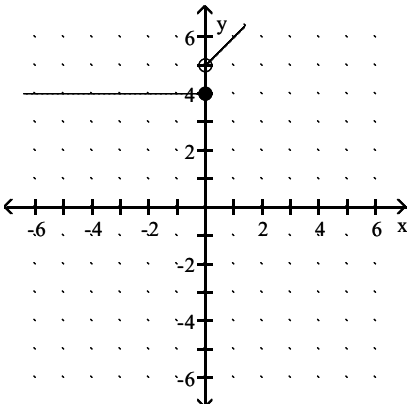

D)

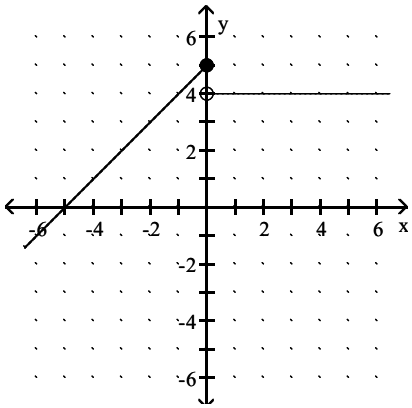

Answer: C

Precalculus Functions and Graphs 4th edition Dugopolski Test Bank

80) $f(x) = \begin{cases} 6x + 3 & \text{for } x < 0 \\ 5x^2 - 2 & \text{for } x \geq 0 \end{cases}$

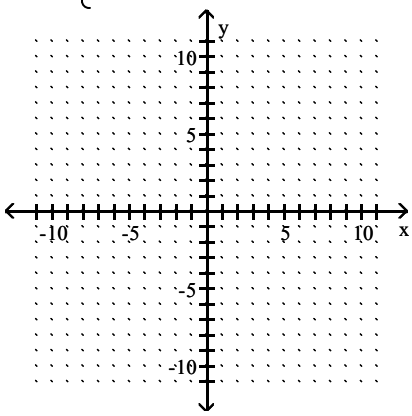

A)

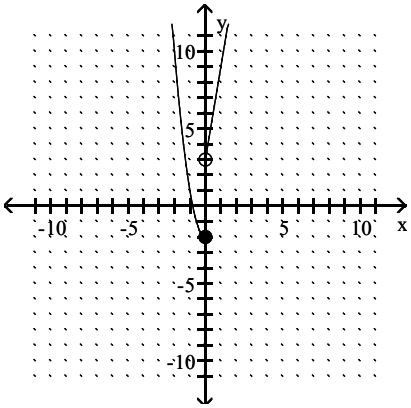

B)

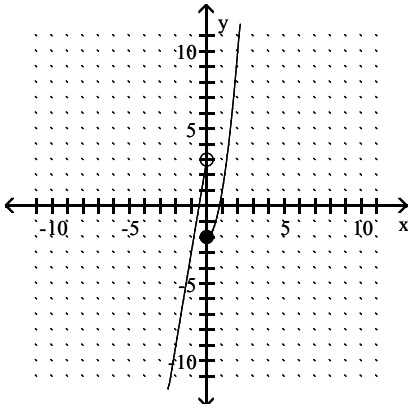

C)

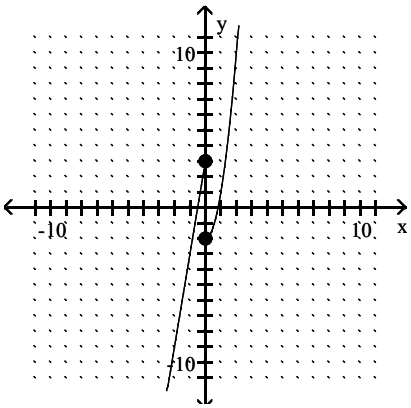

D)

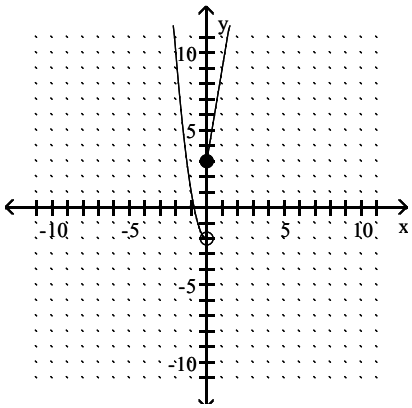

Answer: B

Precalculus Functions and Graphs 4th edition Dugopolski Test Bank

81) $f(x) = \begin{cases} x^2 - 9 & \text{for } x < -1 \\ 0 & \text{for } -1 \le x \le 1 \\ x^2 + 9 & \text{for } x > 1 \end{cases}$

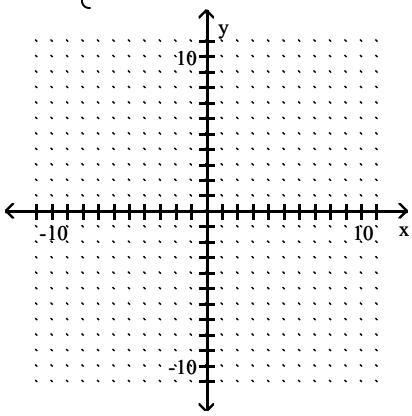

A)

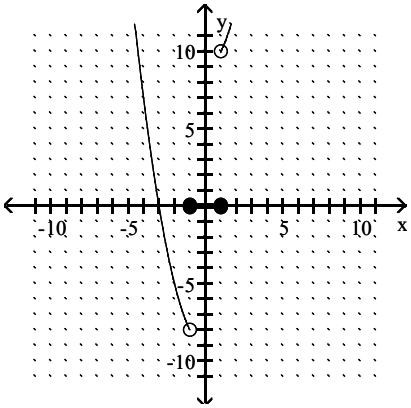

B)

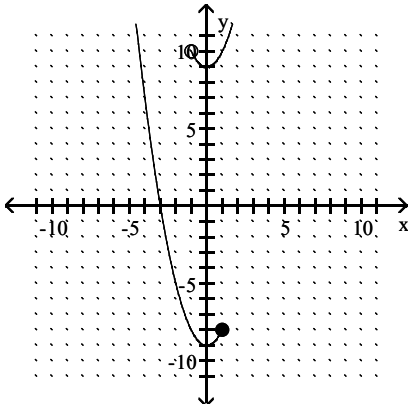

C)

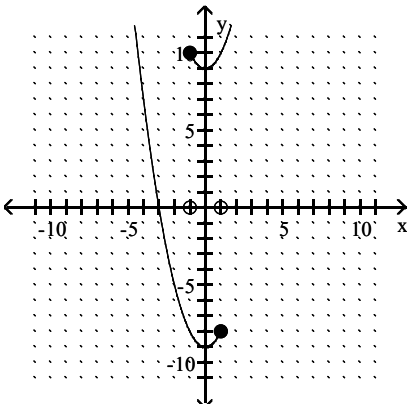

D)

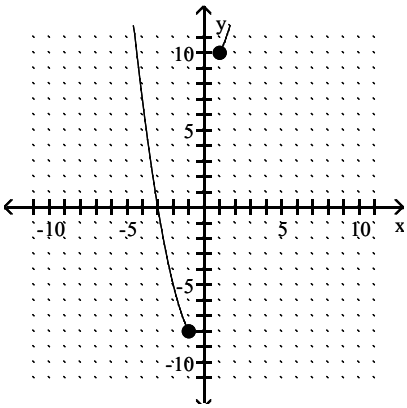

Answer: A

Precalculus Functions and Graphs 4th edition Dugopolski Test Bank

82) $f(x) = \begin{cases} |x| + 1 & \text{for } x < 0 \\ 1 & \text{for } x \geq 0 \end{cases}$

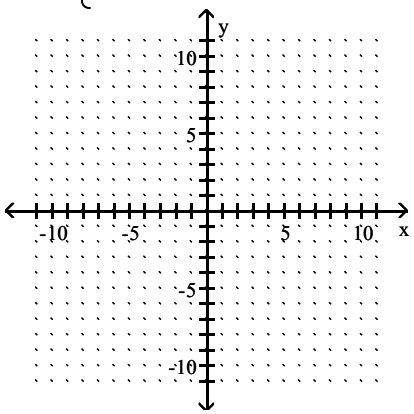

A)

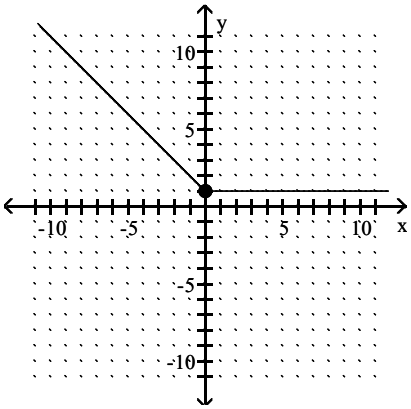

B)

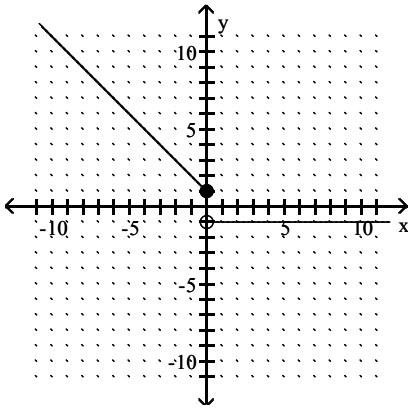

C)

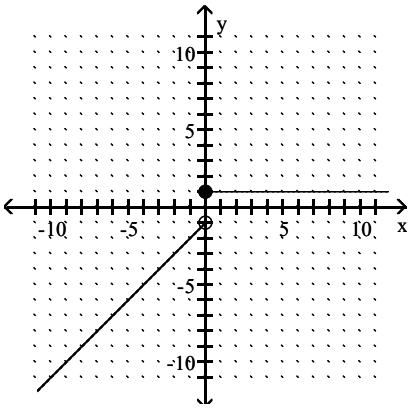

D)

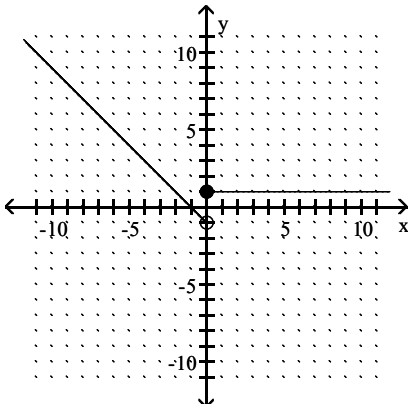

Answer: A

Precalculus Functions and Graphs 4th edition Dugopolski Test Bank

83) $f(x) = [\![x]\!] + 1$

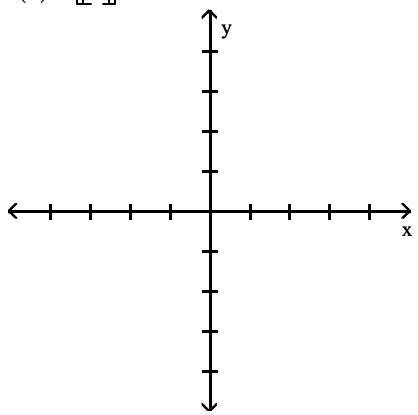

A)

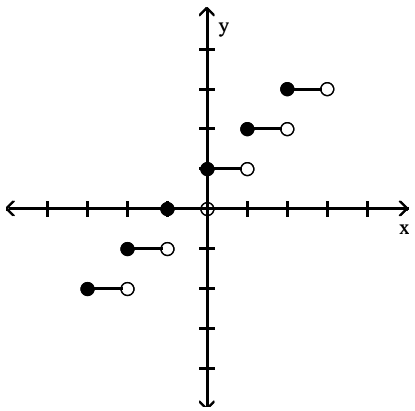

B)

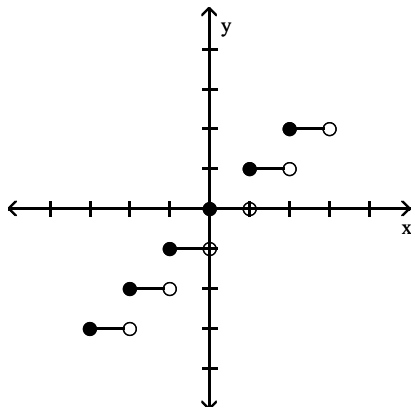

C)

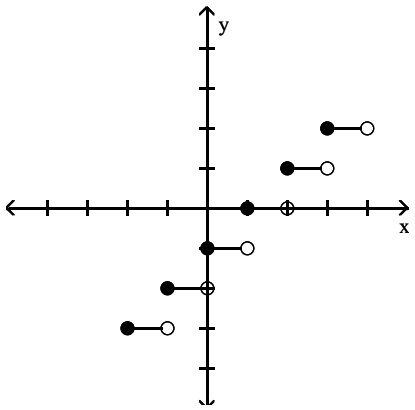

D)

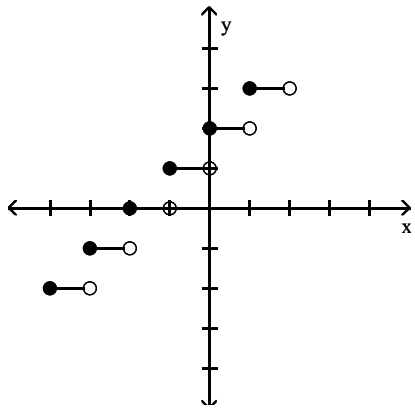

Answer: A

Precalculus Functions and Graphs 4th edition Dugopolski Test Bank

84) $f(x) = [\![x + 1]\!]$

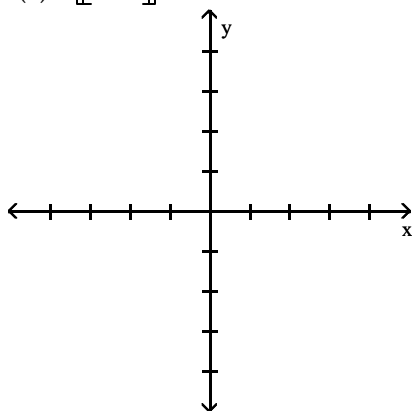

A)

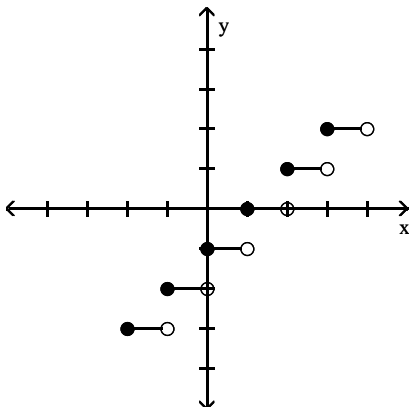

B)

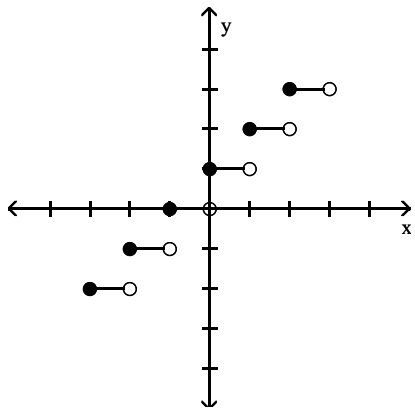

C)

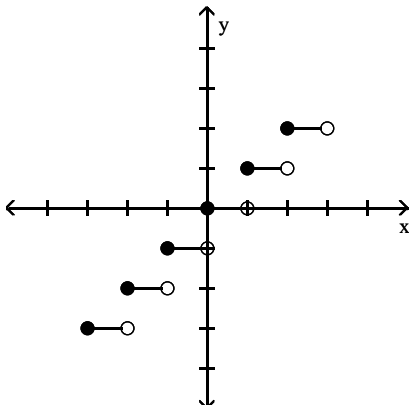

D)

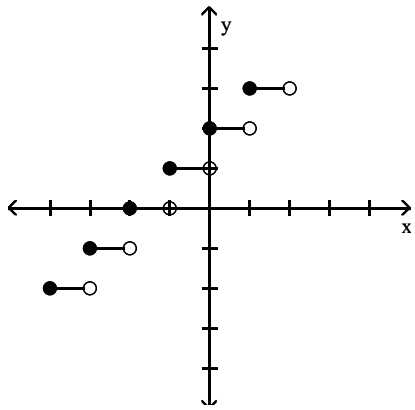

Answer: B

Precalculus Functions and Graphs 4th edition Dugopolski Test Bank

85) $f(x) = [\![x]\!] - 1$

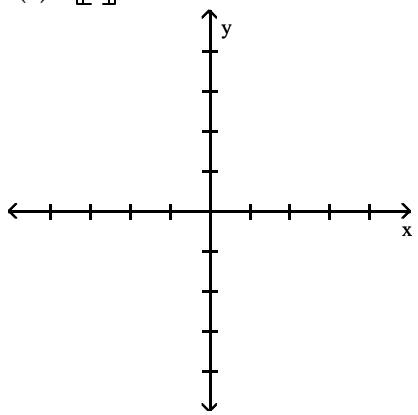

A)

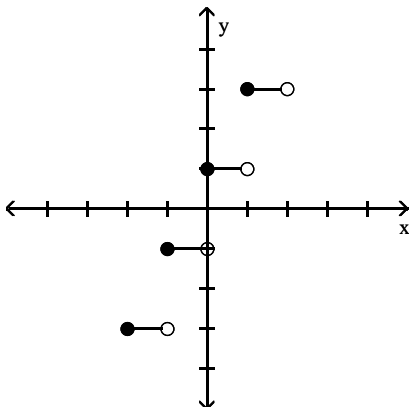

B)

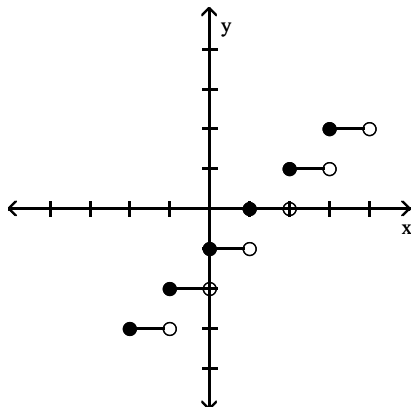

C)

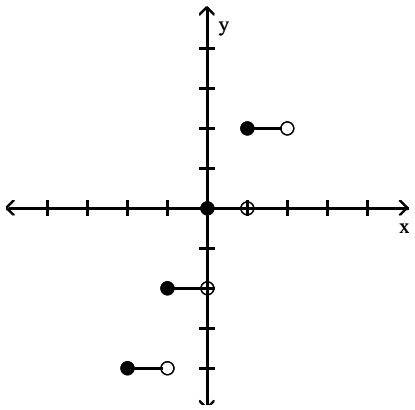

D)

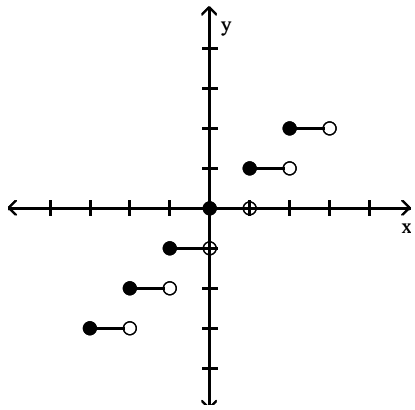

Answer: B

Precalculus Functions and Graphs 4th edition Dugopolski Test Bank

86) $f(x) = [\![x - 1]\!]$

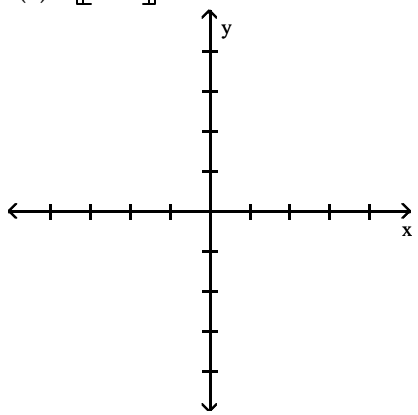

A)

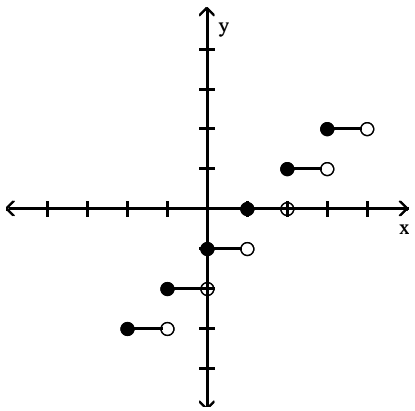

B)

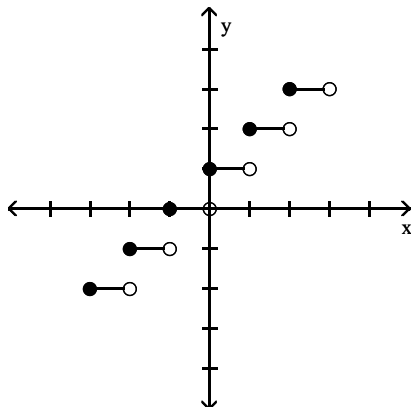

C)

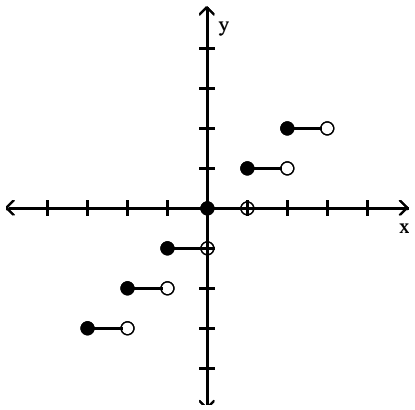

D)

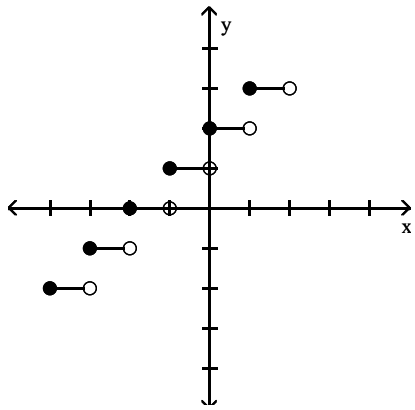

Answer: A

Precalculus Functions and Graphs 4th edition Dugopolski Test Bank

87) $f(x) = 2[\![x]\!]$

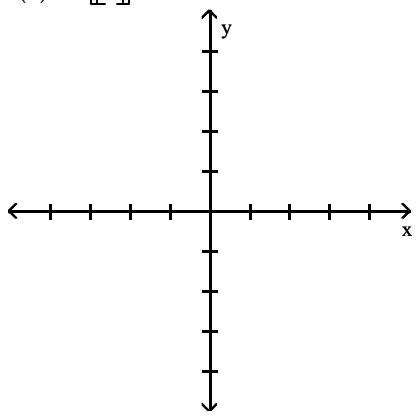

A)

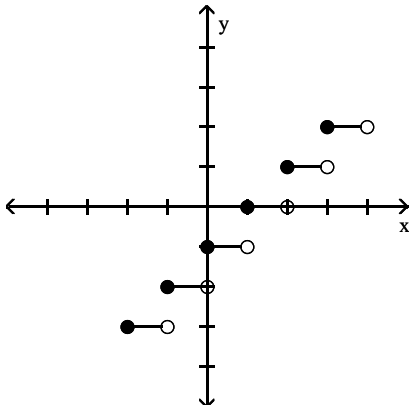

B)

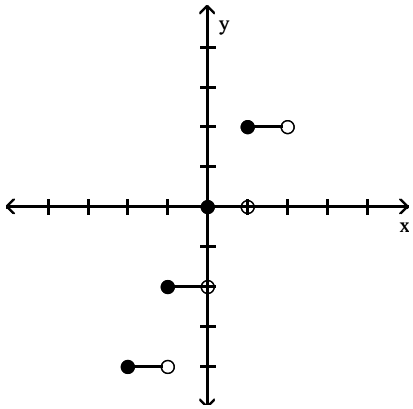

C)

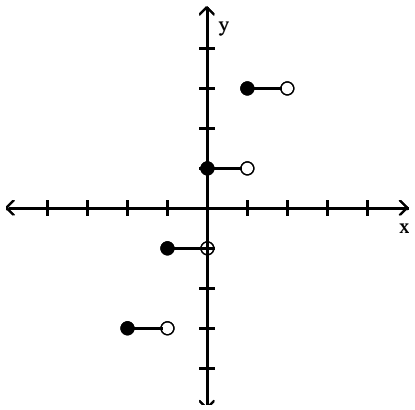

D)

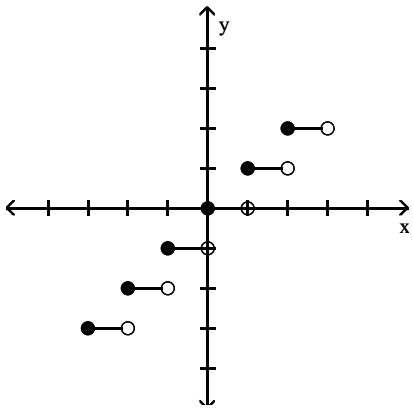

Answer: B

Precalculus Functions and Graphs 4th edition Dugopolski Test Bank

Determine the intervals on which the function is increasing, decreasing, and constant.

88)

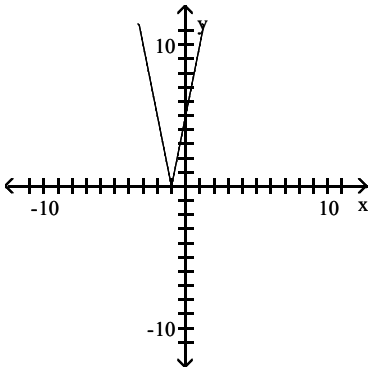

A) Increasing on (1, ∞); Decreasing on (−∞, 1)
B) Increasing on (−∞, 1); Decreasing on (1, ∞)
C) Increasing on (−1, ∞); Decreasing on (−∞, −1)
D) Increasing on (−∞, −1); Decreasing on (−1, ∞)

Answer: C

89)

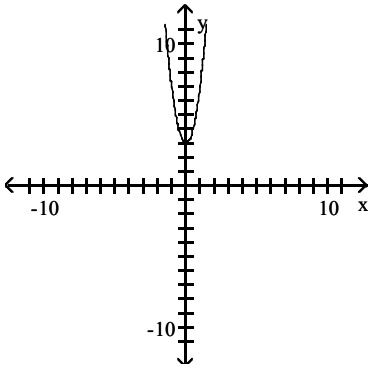

A) Increasing on (−∞, 0); Decreasing on (0, ∞)
B) Increasing on (0, ∞); Decreasing on (−∞, 0)
C) Increasing on (−∞, 0); Decreasing on (−∞, 0)
D) Increasing on (∞, 0); Decreasing on (0, −∞)

Answer: B

90)

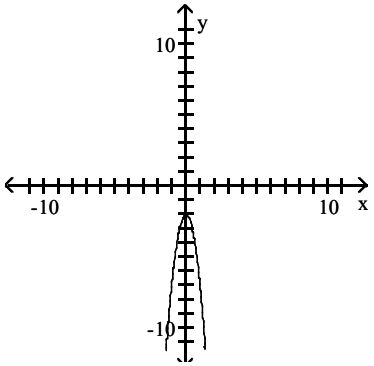

A) Increasing on (−∞, 0); Decreasing on (−∞, 0)
B) Increasing on (−∞, 0); Decreasing on (0, ∞)
C) Increasing on (∞, 0); Decreasing on (0, −∞)
D) Increasing on (0, ∞); Decreasing on (−∞, 0)

Answer: B

Precalculus Functions and Graphs 4th edition Dugopolski Test Bank

91)

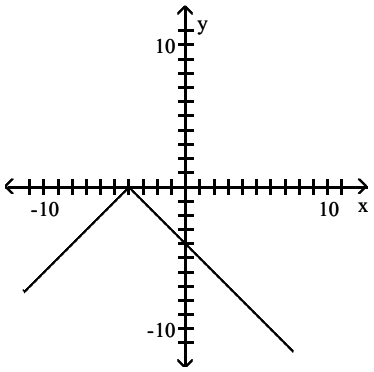

A) Increasing on (–4, ∞); Decreasing on (–∞, –4)
B) Increasing on (–∞, –4); Decreasing on (–∞, –4)
C) Increasing on (–∞, –4); Decreasing on (–4, ∞)
D) Increasing on (–4, ∞); Decreasing on (–4, ∞)

Answer: C

92)

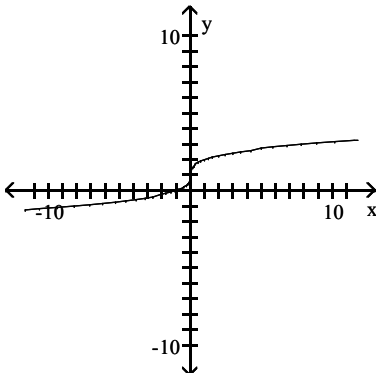

A) Decreasing on (–∞, ∞)
B) Increasing on (0, ∞); Decreasing on (–∞, 0)
C) Increasing on (–∞, 0); Decreasing on (0, ∞)
D) Increasing on (–∞, ∞)

Answer: D

93)

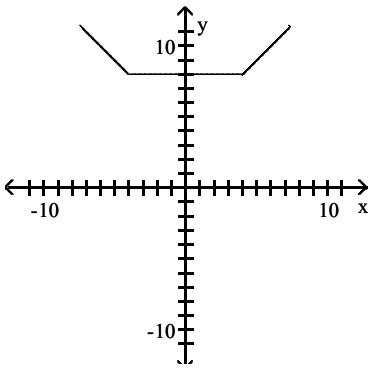

A) Increasing on (–∞, 4); Decreasing on (–∞, –4); Constant on (4, ∞)
B) Increasing on (4, ∞); Decreasing on (–∞, –4); Constant on (–4, 4)
C) Increasing on (4, ∞); Decreasing on (–4, ∞); Constant on (–4, 4)
D) Increasing on (–∞, 4); Decreasing on (–4, ∞); Constant on (4, ∞)

Answer: B

Precalculus Functions and Graphs 4th edition Dugopolski Test Bank

94)

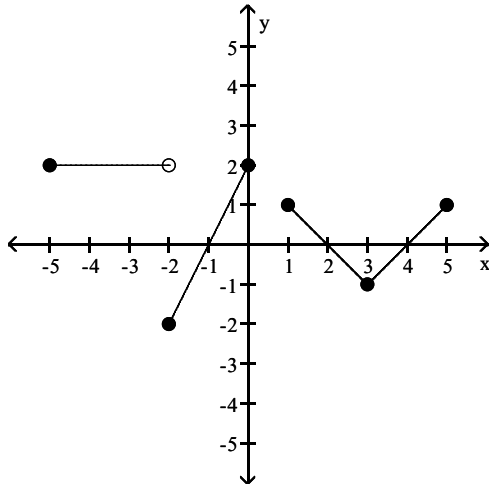

A) Increasing on (–2, 0) and (3, 4); Decreasing on (–5, –2) and (1, 3)
B) Increasing on (–2, 0) and (3, 5); Decreasing on (1, 3); Constant on (–5, –2)
C) Increasing on (–1, 0) and (3, 5); Decreasing on (0, 3); Constant on (–5, –3)
D) Increasing on (1, 3); Decreasing on (–2, 0) and (3, 5); Constant on (2, 5)

Answer: B

95)

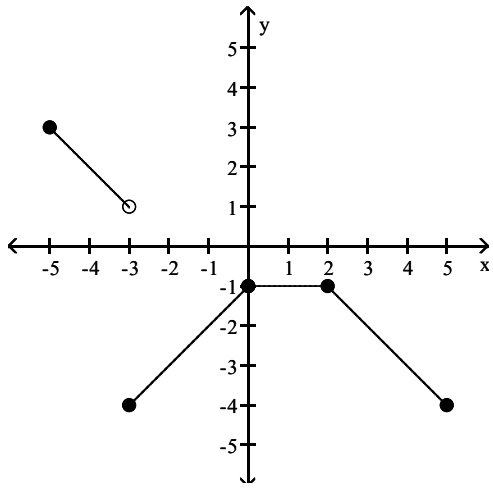

A) Increasing on (–3, –1); Decreasing on (–5, –2) and (2, 4); Constant on (–1, 2)
B) Increasing on (–3, 1); Decreasing on (–5, –3) and (0, 5); Constant on (1, 2)
C) Increasing on (–5, –3) and (2, 5); Decreasing on (–3, 0); Constant on (0, 2)
D) Increasing on (–3, 0); Decreasing on (–5, –3) and (2, 5); Constant on (0, 2)

Answer: D

Find the domain and range.

96) $f(x) = \sqrt{x^2 - 81}$

A) $D = (-\infty, -9] \cup [9, \infty)$, $R = (-\infty, \infty)$
B) $D = [-9, 9]$, $R = [0, \infty)$
C) $D = (-\infty, -9] \cup [9, \infty)$, $R = [0, \infty)$
D) $D = (-\infty, \infty)$, $R = [0, \infty)$

Answer: C

Precalculus Functions and Graphs 4th edition Dugopolski Test Bank

97) $f(x) = \dfrac{x + 9}{|x + 9|}$

A) $D = (-\infty, -9) \cup (-9, \infty)$, $R = [0, \infty)$

B) $D = (-\infty, 9) \cup (9, \infty)$, $R = \{-1, 1\}$

C) $D = (-\infty, 9) \cup (9, \infty)$, $R = (-\infty, \infty)$

D) $D = (-\infty, -9) \cup (-9, \infty)$, $R = \{-1, 1\}$

Answer: D

Identify the intervals on which the given function is increasing, decreasing, or constant.

98)

$$f(x) = \begin{cases} x + 6 & \text{for } x < -3 \\ \sqrt{9 - x^2} & \text{for } -3 \le x \le 3 \\ -2 & \text{for } x > 3 \end{cases}$$

A) inc $(-3, 0)$
dec $(0, 3)$
const $(-\infty, -3), (3, \infty)$

B) inc $(-\infty, -3), (0, 3)$
dec $(-3, 0)$
const $(3, \infty)$

C) inc $(-\infty, -3), (-3, 0)$
dec $(0, 3), (3, \infty)$

D) inc $(-\infty, -3), (-3, 0)$
dec $(0, 3)$
const $(3, \infty)$

Answer: D

99)

$$f(x) = \begin{cases} (x + 5)^2 & \text{for } x < 0 \\ |x - 1| & \text{for } x \ge 0 \end{cases}$$

A) inc $(-5, 0), (1, \infty)$
dec $(-\infty, -5), (0, 1)$

B) inc $(1, \infty)$
dec $(-\infty, 0), (0, 1)$

C) inc $(-\infty, -5), (0, 1)$
dec $(-5, 0)$, $(1, \infty)$

D) inc $(-5, 0)$
dec $(-\infty, -5)$
const $(0, \infty)$

Answer: A

Write a piecewise function for the given graph.

100)

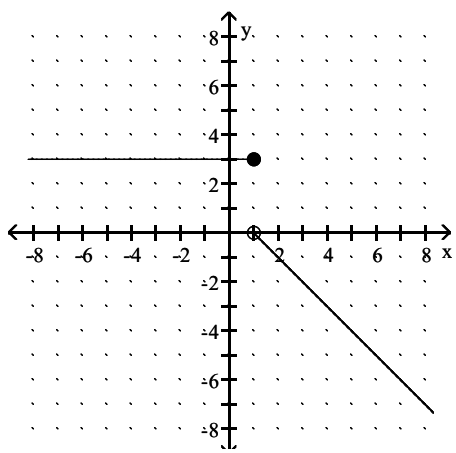

A) $f(x) = \begin{cases} 3 & \text{for } x \le 1 \\ 1 - x & \text{for } x > 1 \end{cases}$

B) $f(x) = \begin{cases} 3 & \text{for } x < 0 \\ 1 - x & \text{for } x \ge 0 \end{cases}$

C) $f(x) = \begin{cases} 3 & \text{for } x < 1 \\ x - 1 & \text{for } x \ge 1 \end{cases}$

D) $f(x) = \begin{cases} 3 & \text{for } x \le 1 \\ 0 - x & \text{for } x > 1 \end{cases}$

Answer: A

Precalculus Functions and Graphs 4th edition Dugopolski Test Bank

101)

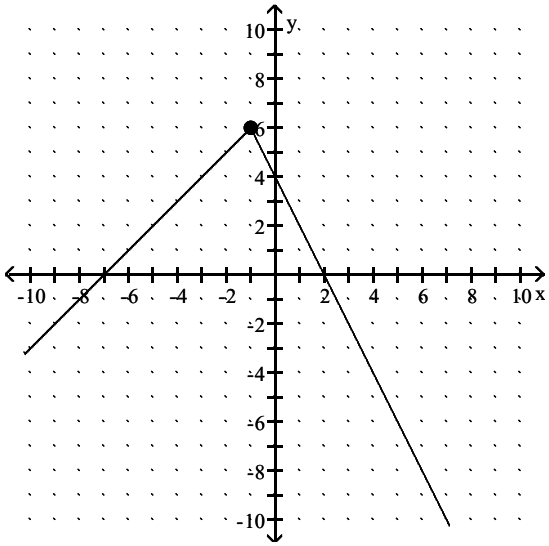

A) $f(x) = \begin{cases} x + 7 & \text{for } x < -1 \\ 4 - x & \text{for } x \geq -1 \end{cases}$

B) $f(x) = \begin{cases} x + 7 & \text{for } x < -1 \\ 4 - 2x & \text{for } x \geq -1 \end{cases}$

C) $f(x) = \begin{cases} x + 6 & \text{for } x < -1 \\ 6 - 2x & \text{for } x \geq -1 \end{cases}$

D) $f(x) = \begin{cases} x + 7 & \text{for } x < -1 \\ -2x & \text{for } x \geq -1 \end{cases}$

Answer: B

Use the minimum and maximum features of a graphing calculator to find approximately the intervals on which the function is increasing or decreasing. Round your values to two decimal places, if necessary.

102) $y = -3x^2 - 4x + 1$

A) inc $(-\infty, -0.67)$, dec $(-0.67, \infty)$

B) dec $(-\infty, -0.67)$, inc $(-0.67, \infty)$

C) inc $(-1.55, -0.67)$, dec $(-0.67, -1.55, \infty)$

D) inc $(-\infty, -1.55)$, dec $(-1.55, \infty)$

Answer: A

103) $y = x^4 - 9x^2 + 18$

A) dec $(-\infty, -2.45)$, $(-1.73, 1.73)$, $(2.45, \infty)$
inc $(-2.45, -1.73)$, $(1.73, 2.45)$

B) dec $(-\infty, -2.12)$, $(2.12, \infty)$
inc $(-2.12, 2.12)$

C) dec $(-\infty, -2.12)$, $(0, 2.12)$
inc $(-2.12, 0)$, $(2.12, \infty)$

D) inc $(-\infty, -2.12)$, $(0, 2.12)$
dec $(-2.12, 0)$, $(2.12, \infty)$

Answer: C

104) $y = |x + 1| + |x - 4| - 10$

A) inc $(10, \infty)$, dec $(-\infty, 1)$

B) inc $(1, \infty)$, dec $(-\infty, 4)$

C) inc $(-\infty, -1)$, dec $(4, \infty)$

D) inc $(4, \infty)$, dec $(-\infty, -1)$

Answer: D

Sketch a graph to represent the situation described.

Precalculus Functions and Graphs 4th edition Dugopolski Test Bank

105) Subscriptions to a magazine fell rapidly during the first three months of the year 2000. During the next three months, subscriptions continued to fall but more and more slowly. After that, subscriptions were constant for two months, and then for the next two months subscriptions rose again, very slowly at first and then more quickly.

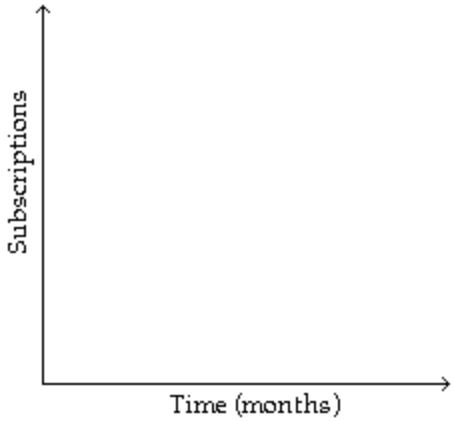

A)

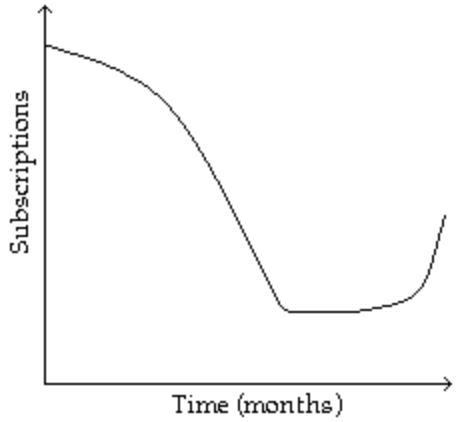

B)

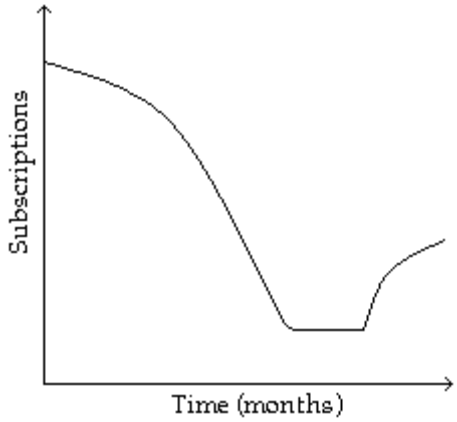

C)

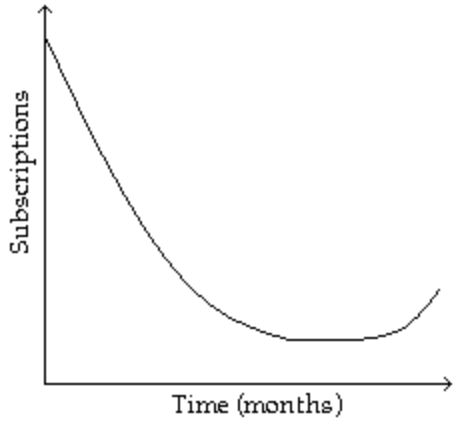

D)

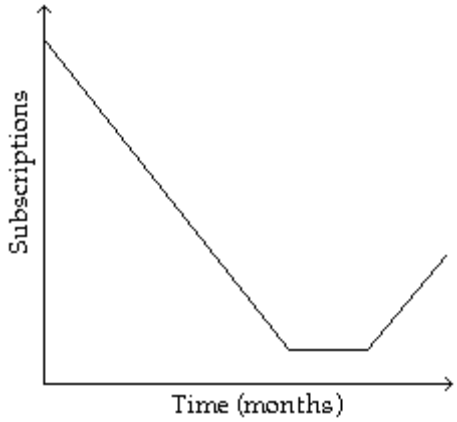

Answer: C

Precalculus Functions and Graphs 4th edition Dugopolski Test Bank

106) Janice jogged twice around a circular race track, which took her 4 minutes, then jogged to the center of the track and rested for 4 minutes before walking home slowly at a constant rate, which took her 12 minutes. Sketch a graph of her distance from the center of the race track as a function of time. Assume that the route she takes home is a straight line from the center of the race track.

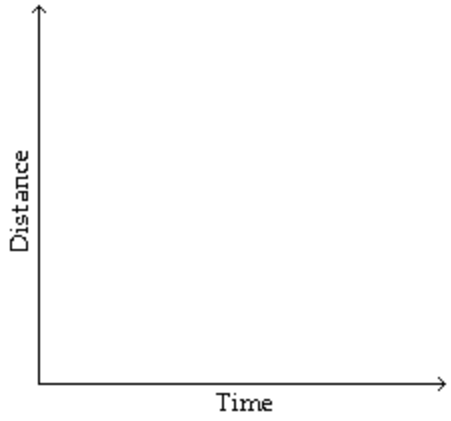

A)

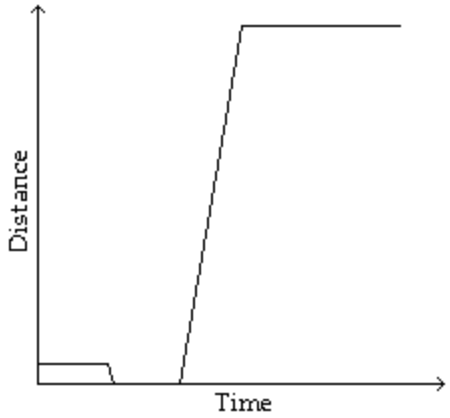

B)

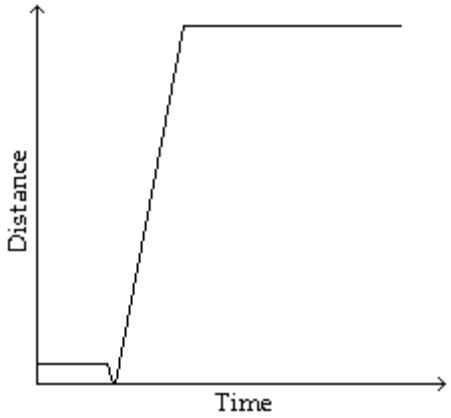

C)

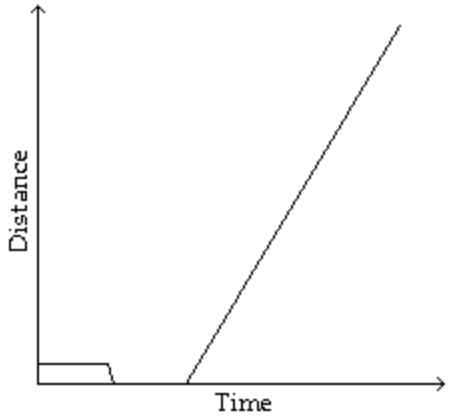

D)

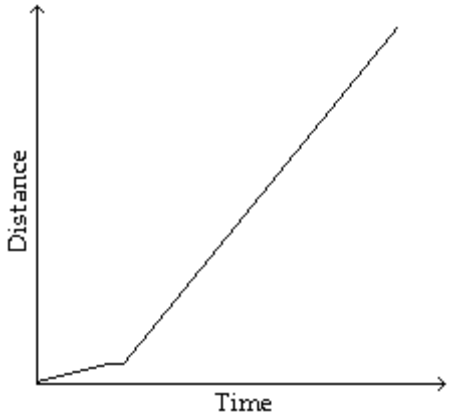

Answer: C

Solve the problem.

107) Employees of a publishing company received an increase in salary of 5% plus a bonus of $600. Let S(x) represent the new salary in terms of the previous salary x. Find the value of S(19,000).

A) $17,524 B) $19,600 C) $29,100 D) $20,550

Answer: D

Precalculus Functions and Graphs 4th edition Dugopolski Test Bank

108) Assume it costs 25 cents to mail a letter weighing one ounce or less, and then 20 cents for each additional ounce or fraction of an ounce. Let L(x) be the cost of mailing a letter weighing x ounces. Graph y = L(x).

A)

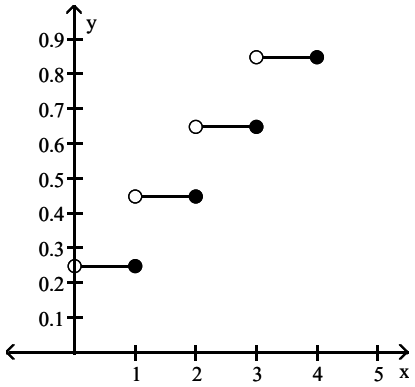

B)

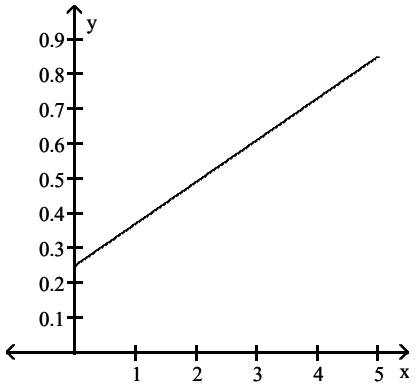

Answer: A

109) A video rental company charges \$3 for the first day, and \$2 for each additional day, for renting video tape. Use the greatest integer function and write an expression for renting a video tape for x days.

A) $y = [\![2x + 3]\!]$ B) $y + 3 = 2[\![x]\!]$ C) $y = 2x + 3$ D) $y = 2[\![x - 1]\!] + 3$

Answer: D

110) Suppose a car rental company charges \$134 for the first day and \$84 for each additional or partial day. Let S(x) represent the cost of renting a car for x days. Find the value of S(4.5).

A) \$428 B) \$470 C) \$512 D) \$378

Answer: B

111) Suppose a life insurance policy costs \$16 for the first unit of coverage and then \$4 for each additional unit of coverage. Let C(x) be the cost for insurance of x units of coverage. What will 10 units of coverage cost?

A) \$40 B) \$56 C) \$52 D) \$24

Answer: C

112) A salesperson gets a commission of \$1600 for the first \$10,000 of sales, and then \$800 for each additional \$10,000 or partial of sales. Let S(x) represent the commission on x dollars of sales. Find the value of S(75,000).

A) \$7600 B) \$6000 C) \$6800 D) \$7200

Answer: D

113) The function $E(x) = 0.0049x^3 - 0.0058x^2 + 0.175x + 1.02$ gives the approximate total earnings of a company, in millions of dollars, where x = 0 corresponds to 1996, x = 1 corresponds to 1997, and so on. This model is valid for the years from 1996 to 2000. Determine the earnings for 1998. Round to the nearest hundredth when necessary.

A) \$1.39 million B) \$1.63 million C) \$1.43 million D) \$1.19 million

Answer: A

Precalculus Functions and Graphs 4th edition Dugopolski Test Bank

114) A rectangular box with volume 188 cubic feet is built with a square base and top. The cost is \$1.50 per square foot for the top and the bottom and \$2.00 per square foot for the sides. Let x represent the length of a side of the base. Express the cost of the box as a function of x. Give the function and state its domain.

A) $C(x) = 3x^2 + \frac{752}{x}$

Domain: $\{x \mid x > 4\}$

B) $C(x) = 2x^2 + \frac{1504}{x}$

Domain: $\{x \mid x < 10\}$

C) $C(x) = 3x^2 + \frac{1504}{x}$

Domain: $\{x \mid x > 0\}$

D) $C(x) = 4x + \frac{1504}{x^2}$

Domain: $\{x \mid x > 0\}$

Answer: C

Graph the pair of functions on the same plane. Use a dashed line for g(x).

115) $f(x) = x^2$, $g(x) = x^2 - 5$

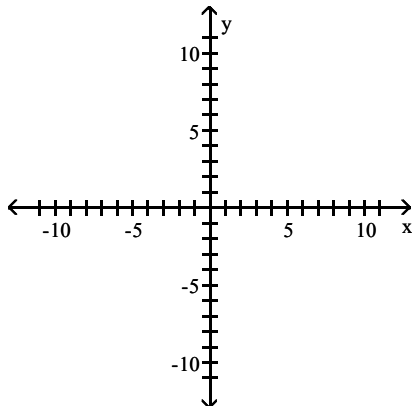

A)

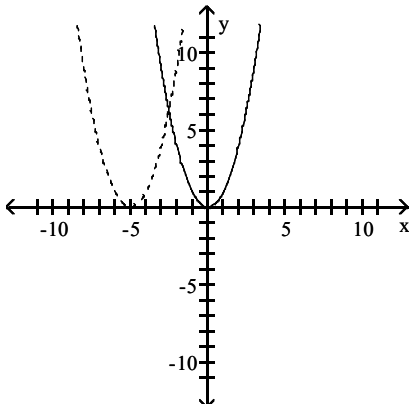

B)

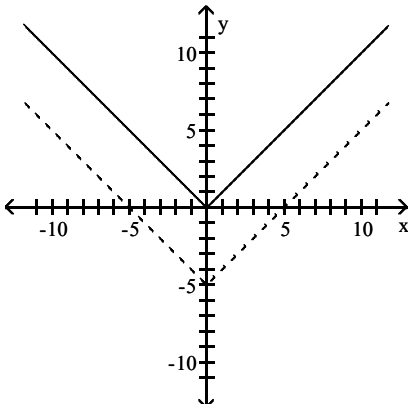

C)

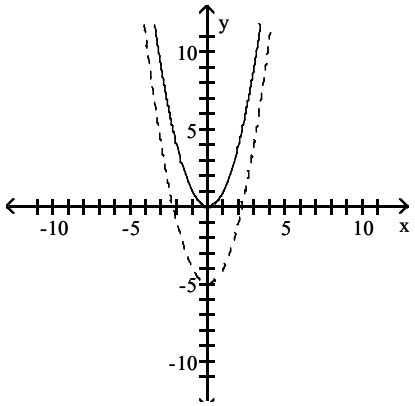

D)

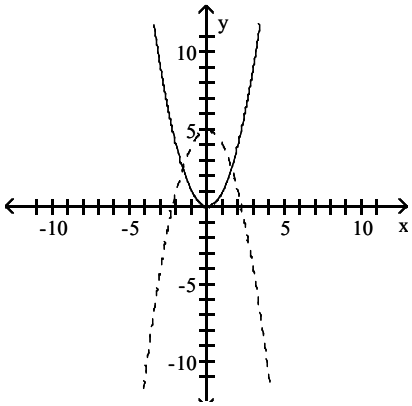

Answer: C

Precalculus Functions and Graphs 4th edition Dugopolski Test Bank

116) $f(x) = |x|$, $g(x) = |x - 5|$

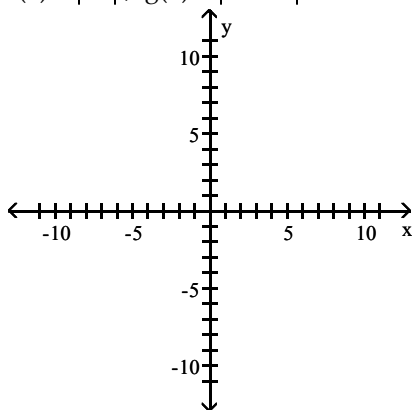

A)

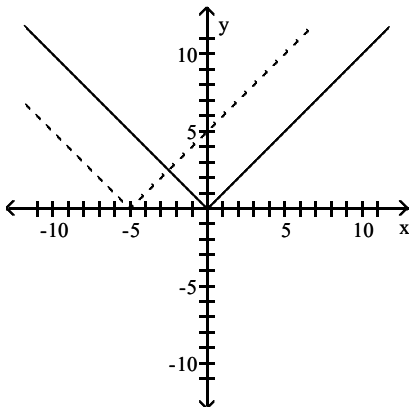

B)

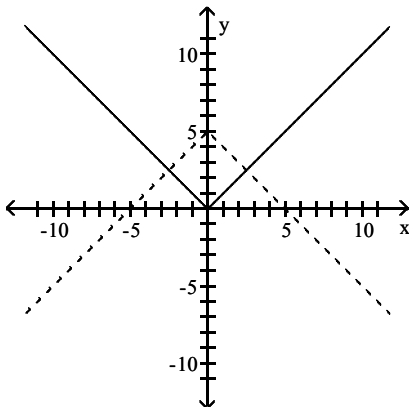

C)

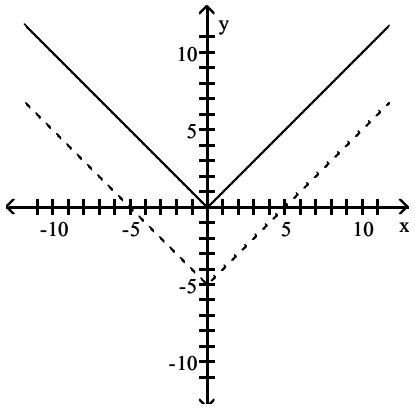

D)

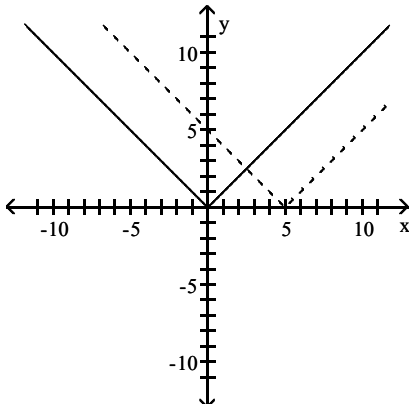

Answer: D

Precalculus Functions and Graphs 4th edition Dugopolski Test Bank

117) $f(x) = x^3$, $g(x) = (x + 2)^3$

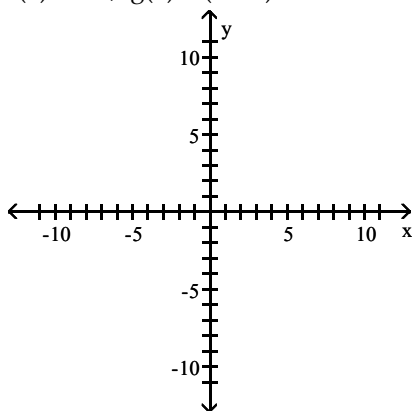

A)

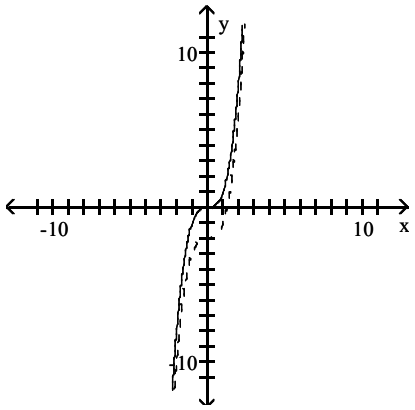

B)

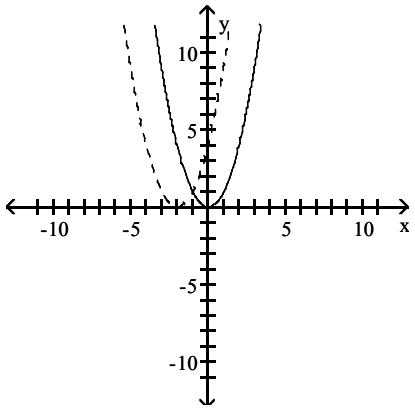

C)

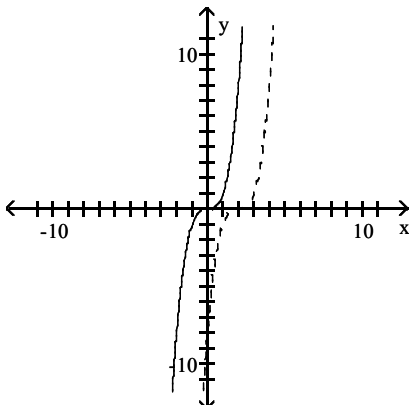

D)

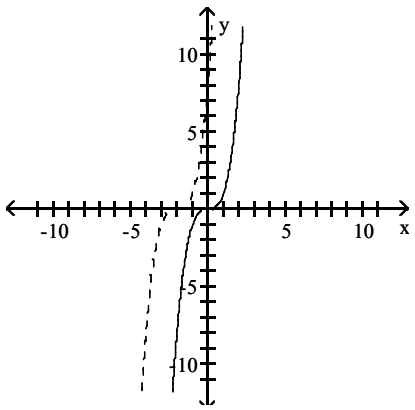

Answer: D

Precalculus Functions and Graphs 4th edition Dugopolski Test Bank

118) $f(x) = |x|$, $g(x) = -4|x|$

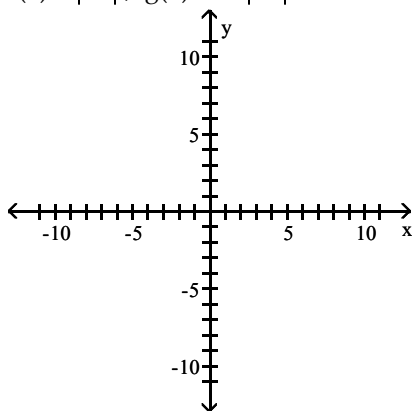

A)

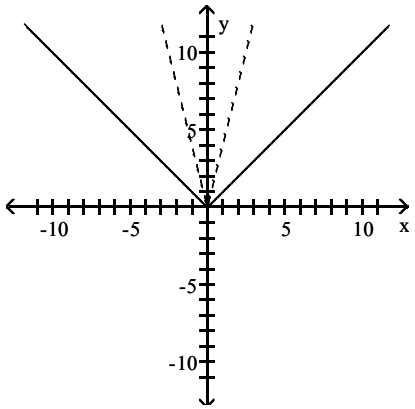

B)

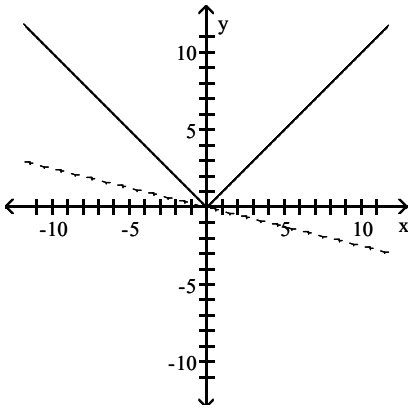

C)

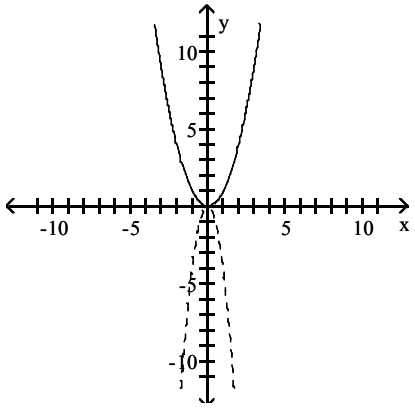

D)

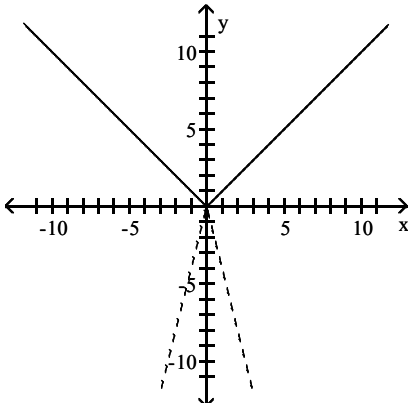

Answer: D

Precalculus Functions and Graphs 4th edition Dugopolski Test Bank

119) $f(x) = x^2$, $g(x) = (x - 5)^2 - 2$

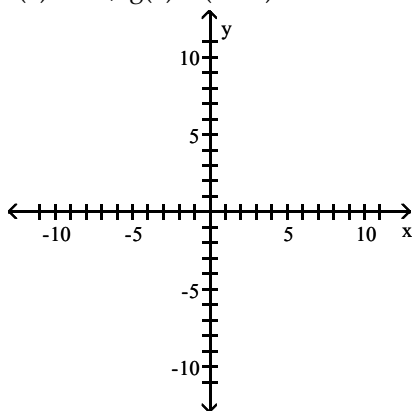

A)

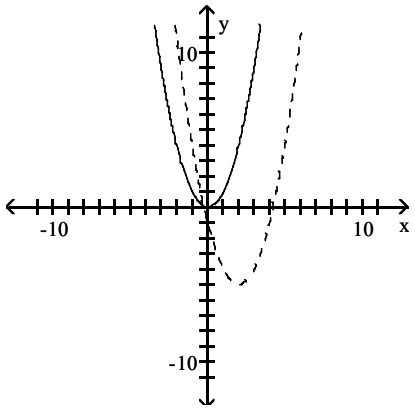

B)

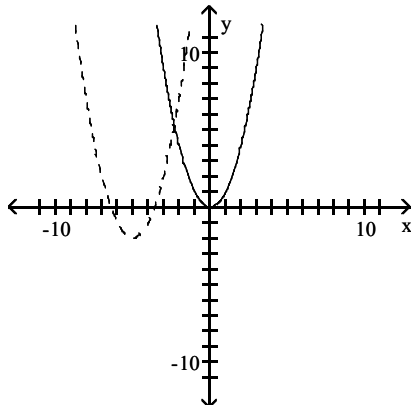

C)

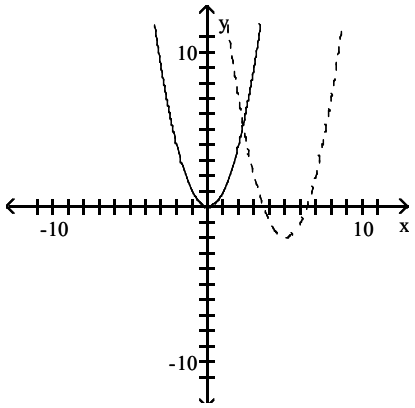

D)

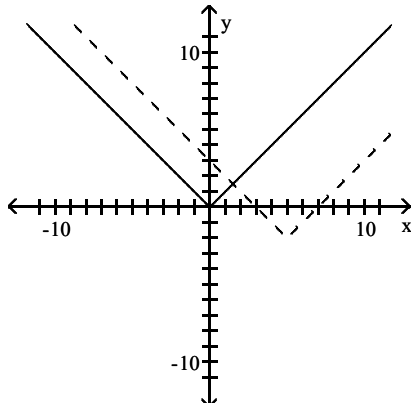

Answer: C

Precalculus Functions and Graphs 4th edition Dugopolski Test Bank

120) $f(x) = x^2$, $g(x) = -\frac{1}{2}(x + 2)^2 + 3$

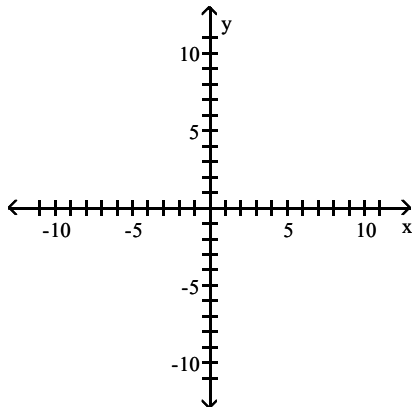

A)

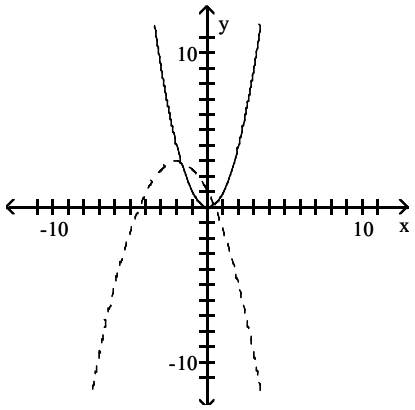

B)

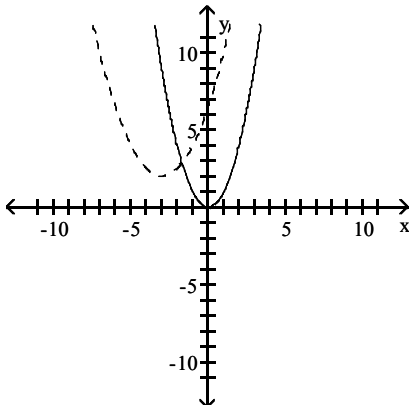

C)

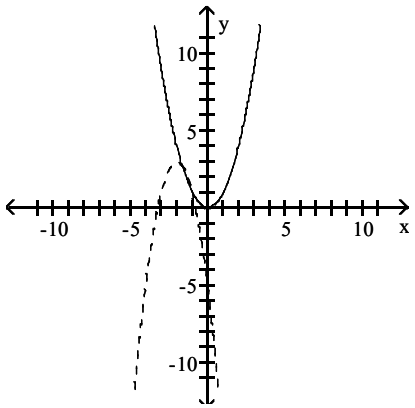

D)

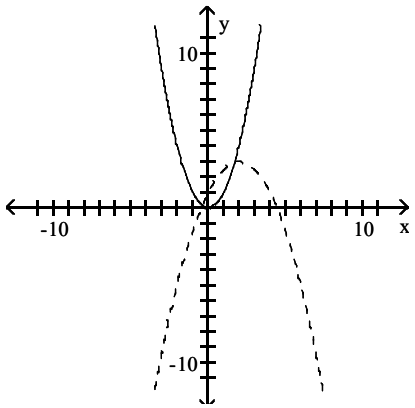

Answer: A

Precalculus Functions and Graphs 4th edition Dugopolski Test Bank

121) $f(x) = \sqrt[3]{x}$, $g(x) = \sqrt[3]{x} + 3$

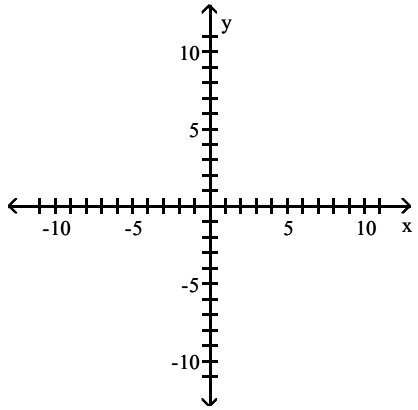

A)

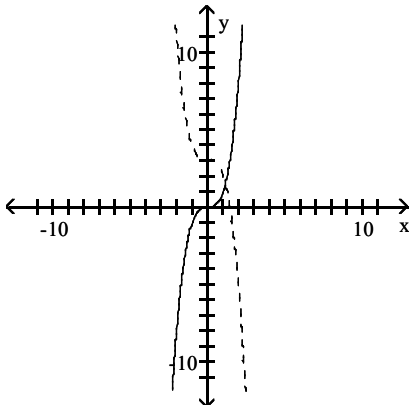

B)

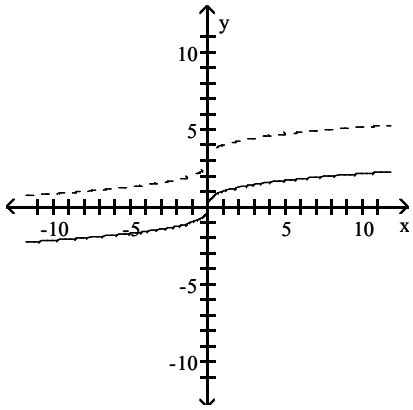

C)

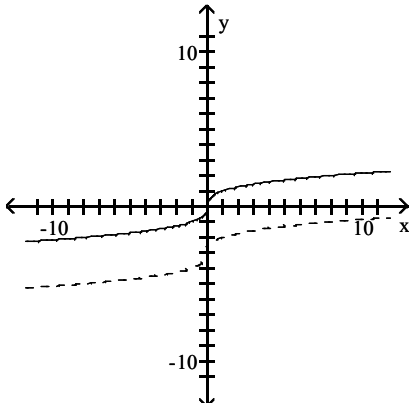

D)

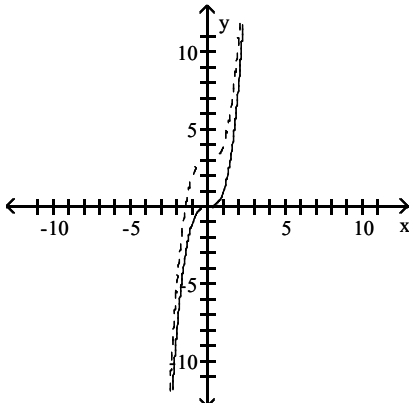

Answer: B

Precalculus Functions and Graphs 4th edition Dugopolski Test Bank

122) $f(x) = |x|$, $g(x) = \frac{1}{3}|x + 3| - 2$

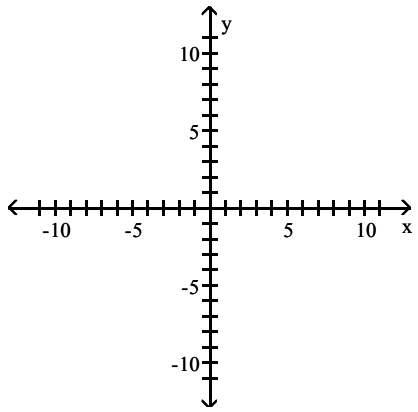

A)

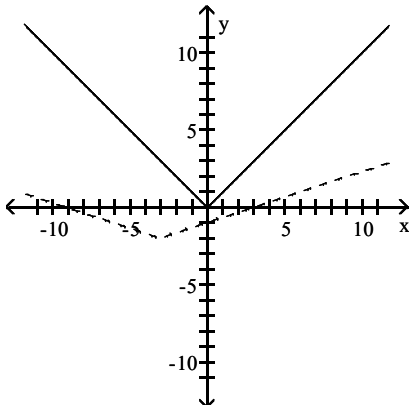

B)

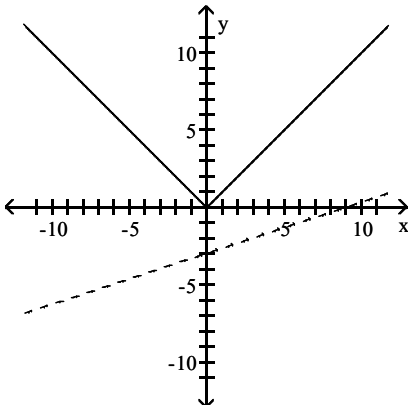

C)

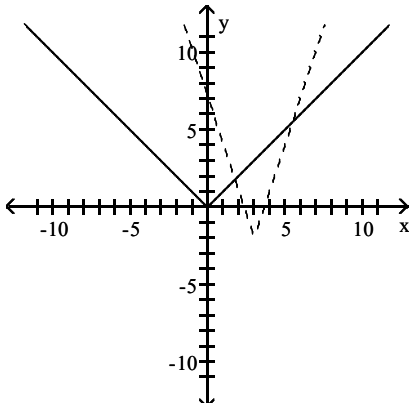

D)

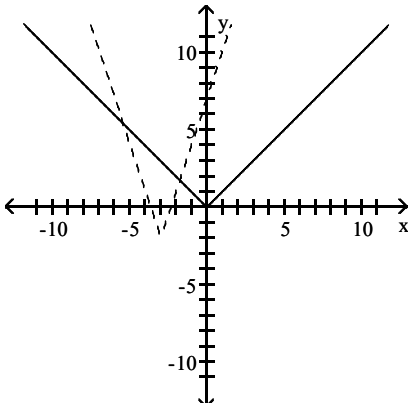

Answer: A

Precalculus Functions and Graphs 4th edition Dugopolski Test Bank

123) $f(x) = \sqrt[3]{x}$, $g(x) = \sqrt[3]{-x} + 2$

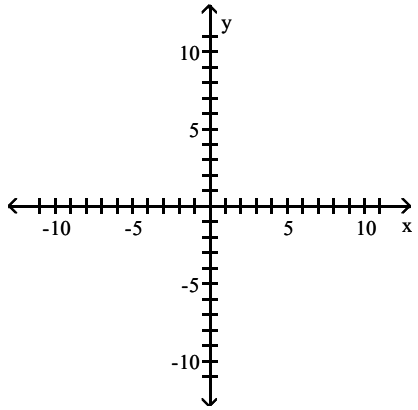

A)

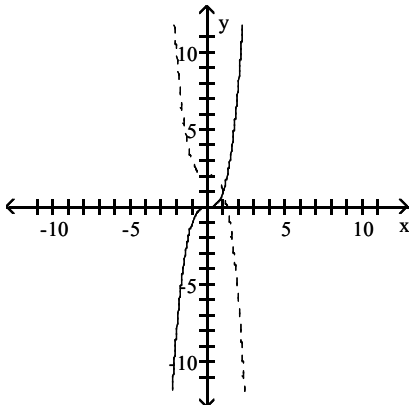

B)

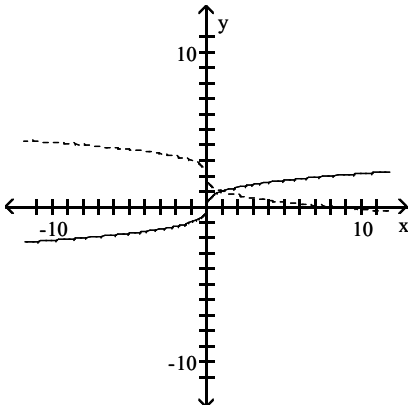

C)

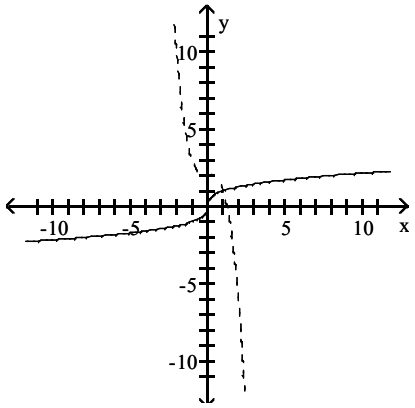

D)

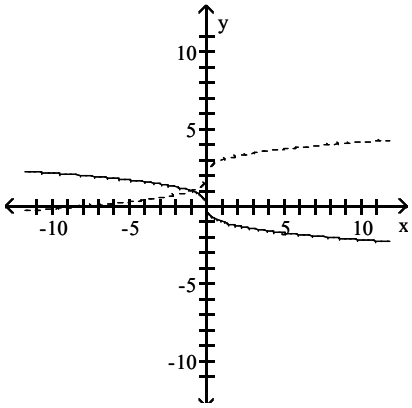

Answer: B

Precalculus Functions and Graphs 4th edition Dugopolski Test Bank

Match the function with the graph.

124)

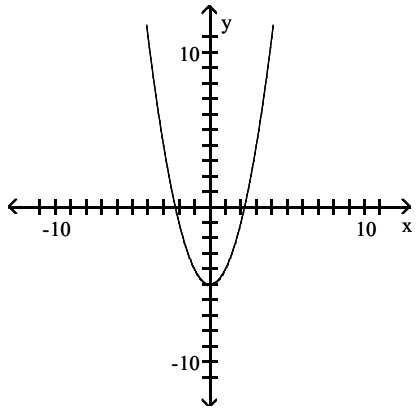

A) $y = (x + 5)^2$ B) $y = x^2 - 5$ C) $y = (x - 5)^2$ D) $y = (x - 5)^2 + 3$

Answer: B

125)

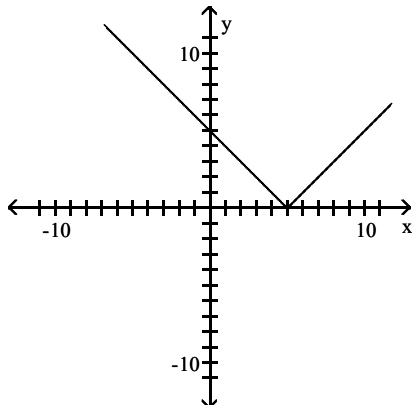

A) $y = |x + 5|$ B) $y = |x| - 5$ C) $y = |x - 5|$ D) $y = |x - 5| + 1$

Answer: C

126)

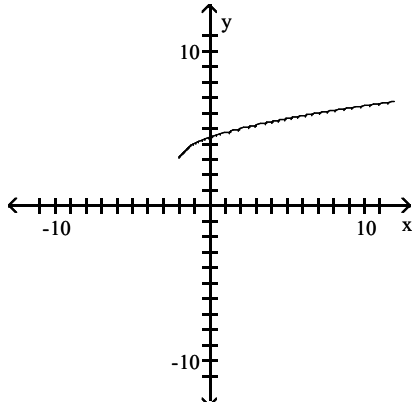

A) $y = \sqrt{x + 2}$ B) $y = \sqrt{x - 2}$ C) $y = \sqrt{x} + 3$ D) $y = \sqrt{x + 2} + 3$

Answer: D

Precalculus Functions and Graphs 4th edition Dugopolski Test Bank

127)

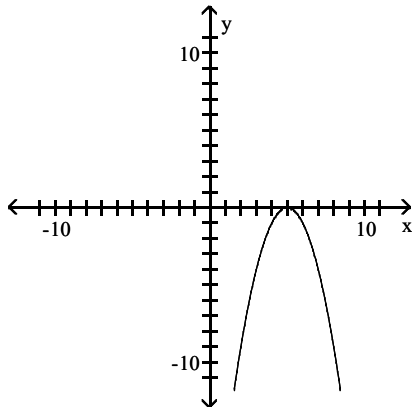

A) $g(x) = -x^2 + 5$ B) $g(x) = -(x - 5)^2$ C) $g(x) = (x + 5)^2$ D) $g(x) = -x^2 - 5$

Answer: B

128)

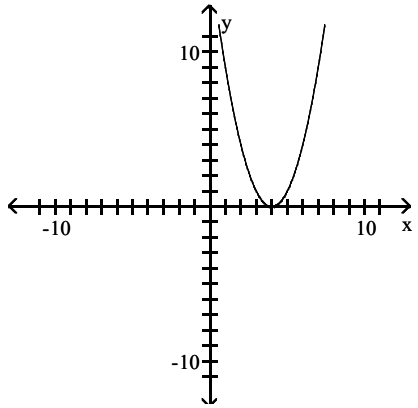

A) $g(x) = (-x + 4)^2$ B) $g(x) = -x^2 + 4$ C) $g(x) = (-x - 4)^2$ D) $g(x) = -x^2 - 4$

Answer: A

129)

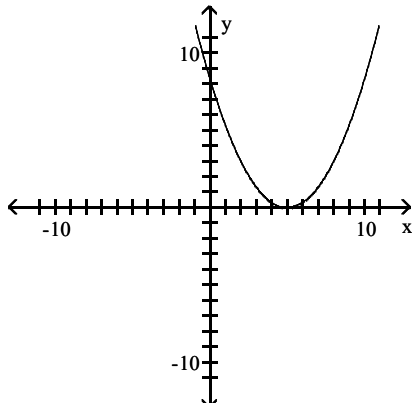

A) $g(x) = (x + 5)^2$ B) $g(x) = \frac{1}{3}x^2 - 5$ C) $g(x) = \frac{1}{3}x^2 + 5$ D) $g(x) = \frac{1}{3}(x - 5)^2$

Answer: D

Precalculus Functions and Graphs 4th edition Dugopolski Test Bank

130)

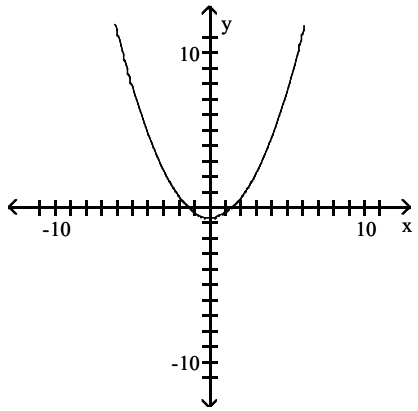

A) $g(x) = -x^2 + 2$ B) $g(x) = \frac{1}{3}(x^2 - 2)$ C) $g(x) = \frac{1}{3}(x + 2)^2$ D) $g(x) = \frac{1}{3}(x - 2)^2$

Answer: B

131)

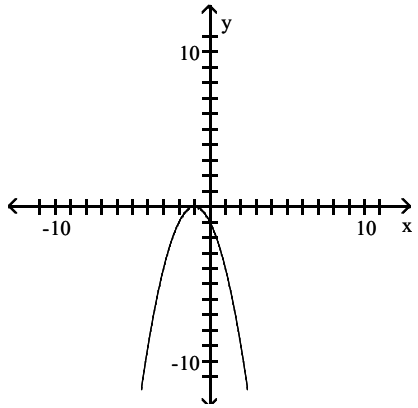

A) $g(x) = -x^2 - 1$ B) $g(x) = -(x + 1)^2$ C) $g(x) = -x^2 + 1$ D) $g(x) = -x^2$

Answer: B

Write the equation of the graph after the indicated transformation(s).

132) The graph of $y = \sqrt{x}$ is translated 3 units to the right.

A) $y = \sqrt{x + 3}$ B) $y = \sqrt{x} + 3$ C) $y = \sqrt{x} - 3$ D) $y = \sqrt{x - 3}$

Answer: D

133) The graph of $y = x^2$ is translated 7 units to the left and 6 units downward.

A) $y = (x - 6)^2 + 7$ B) $y = (x + 7)^2 - 6$ C) $y = (x - 7)^2 - 6$ D) $y = (x + 6)^2 - 7$

Answer: B

134) The graph of $y = x^2$ is vertically stretched by a factor of 5, and the resulting graph is reflected across the x–axis.

A) $y = 5x^2$ B) $y = -5x^2$ C) $y = 5(x - 5)x^2$ D) $y = (x - 5)^2$

Answer: B

135) The graph of $y = x^3$ is shifted 3.0 units to the right and then vertically shrunk by a factor of 0.3.

A) $y = 0.3(x - 3.0)^3$ B) $y = 0.3x^3 + 3.0$ C) $y = 0.3(x + 3.0)^3$ D) $y = 3.0(x - 0.3)^3$

Answer: A

Precalculus Functions and Graphs 4th edition Dugopolski Test Bank

136) The graph of $y = |x|$ is vertically stretched by a factor of 5.1. This graph is then reflected across the x–axis. Finally, the graph is shifted 0.42 units downward.

A) $y = 5.1|x - 0.42|$ B) $y = 5.1|x| - 0.42$ C) $y = -5.1|x| - 0.42$ D) $y = 5.1|-x| - 0.42$

Answer: C

137) The graph of $y = \sqrt{x}$ is shifted 2 units to the left. Then the graph is shifted 9 units upward.

A) $y = \sqrt{x - 2} + 9$ B) $y = \sqrt{x + 2} + 9$ C) $y = \sqrt{x + 9} + 2$ D) $y = 9\sqrt{x + 2}$

Answer: B

138) The graph of $y = \sqrt[3]{x}$ is shifted 1.2 units to the left. This graph is then vertically stretched by a factor of 7.6. Finally, the graph is reflected across the x–axis.

A) $y = -7.6\sqrt[3]{x + 1.2}$ B) $y = -7.6\sqrt[3]{x - 1.2}$ C) $y = 7.6\sqrt[3]{x + 1.2}$ D) $y = -1.2\sqrt[3]{x + 7.6}$

Answer: A

139) The graph of $y = |x|$ is reflected across the y–axis. This graph is then vertically stretched by a factor of 4.6. Finally, the graph is shifted 4 units downward.

A) $y = -4.6|x| - 4$ B) $y = 4|-x| - 4.6$ C) $y = 4.6|-x| - 4$ D) $y = 4.6|-x| + 4$

Answer: C

Use transformations to graph the function and state the domain and range.

140) $y = x^2 - 1$

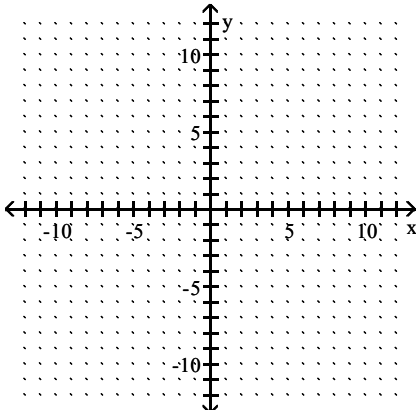

A) $D = (-\infty, \infty)$, $R = [-1, \infty)$

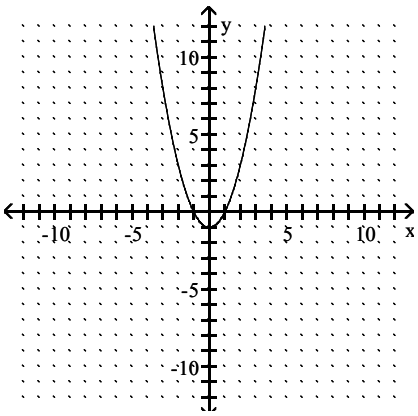

B) $D = (-\infty, \infty)$, $R = [0, \infty)$

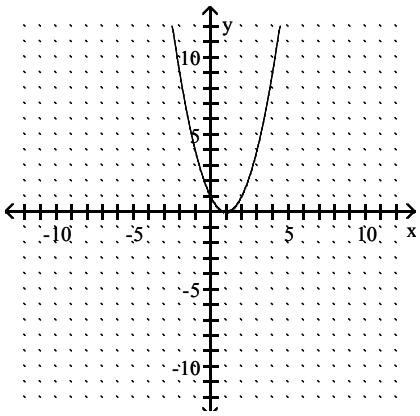

Precalculus Functions and Graphs 4th edition Dugopolski Test Bank

C) D = (−∞, ∞), R = [1, ∞)

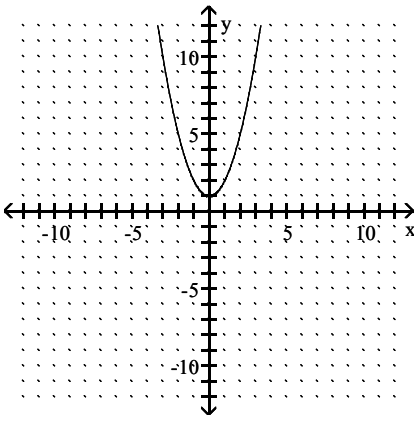

D) D = (−∞, ∞), R = [0, ∞)

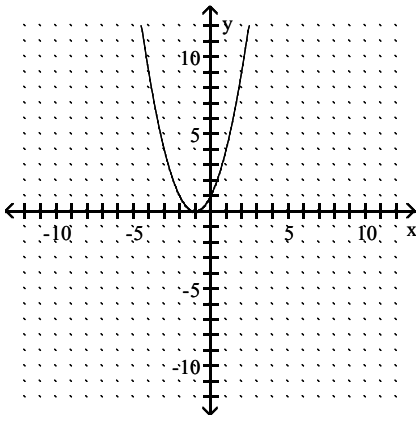

Answer: A

141) $y = 5x^2 - 6$

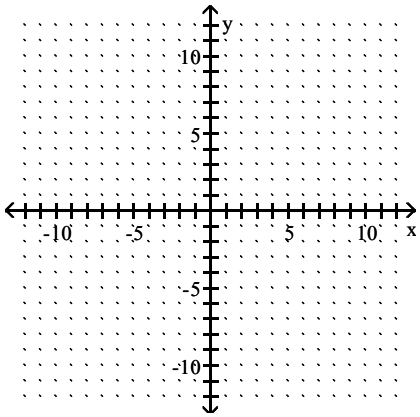

A) D = (−∞, ∞), R = [−6,∞)

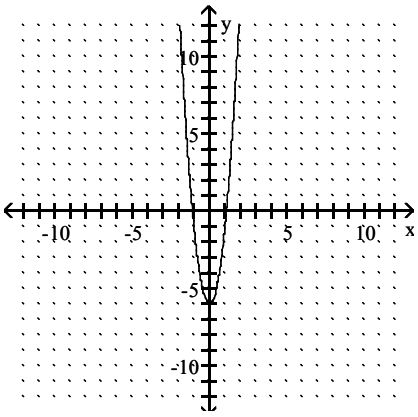

B) D = (−∞, ∞), R = [0, ∞)

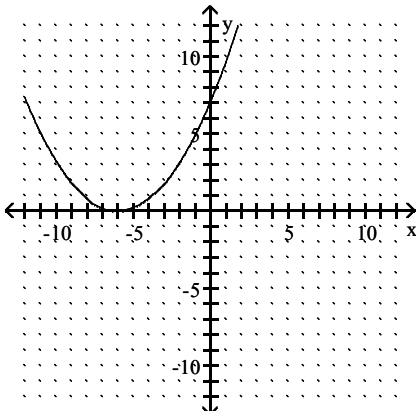

Precalculus Functions and Graphs 4th edition Dugopolski Test Bank

C) D = (−∞, ∞), R = (−∞, 6]

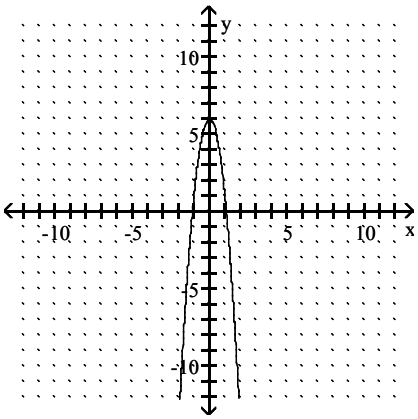

D) D = (−∞, ∞), R = [6, ∞)

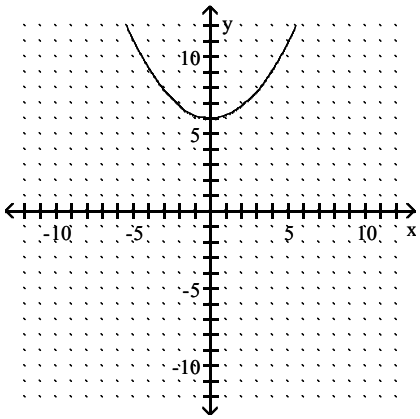

Answer: A

142) y = | 6 − x |

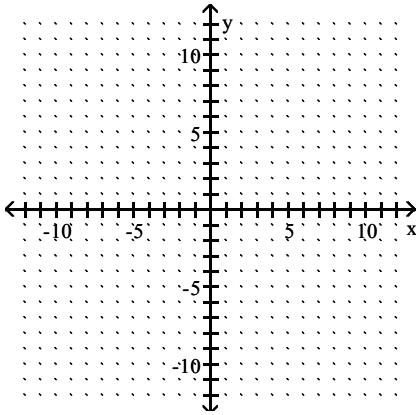

A) D = (−∞, ∞), R = (−∞, − 6]

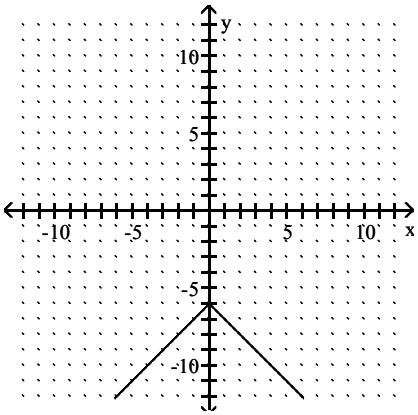

B) D = (−∞, ∞), R = (−∞, 6]

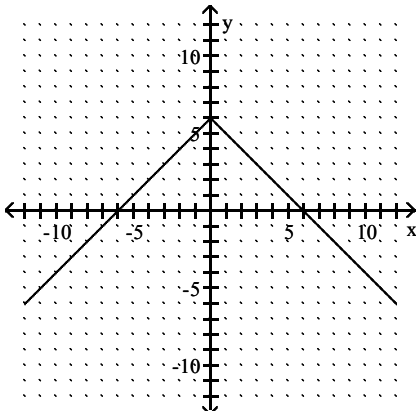

Precalculus Functions and Graphs 4th edition Dugopolski Test Bank

C) D = (−∞, ∞), R = (−∞, 0)

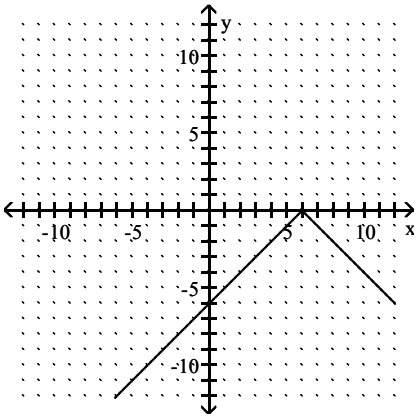

D) D = (−∞, ∞), R = [0, ∞)

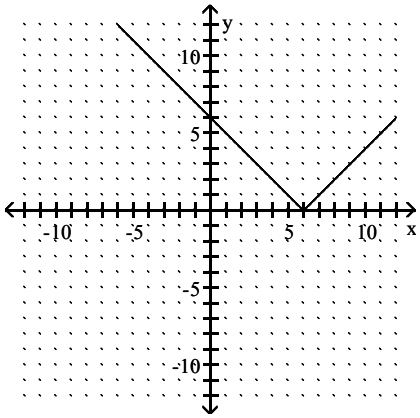

Answer: D

143) y = 8| x | − 4

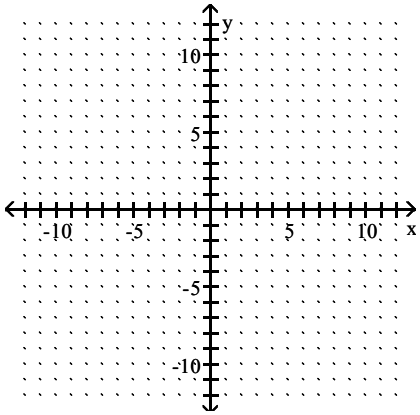

A) D = (−∞, ∞), R = [0, ∞)

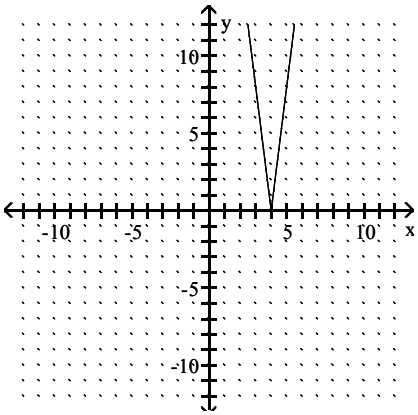

B) D = (−∞, ∞), R = [− 4, ∞)

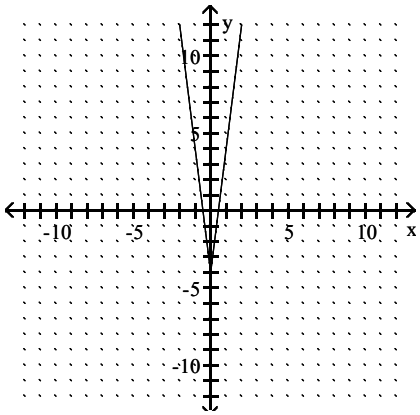

Precalculus Functions and Graphs 4th edition Dugopolski Test Bank

C) D = (−∞, ∞), R = (−∞, 4]

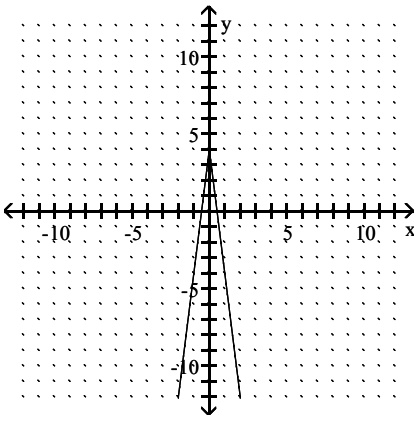

D) D = (−∞, ∞), R = [0, ∞)

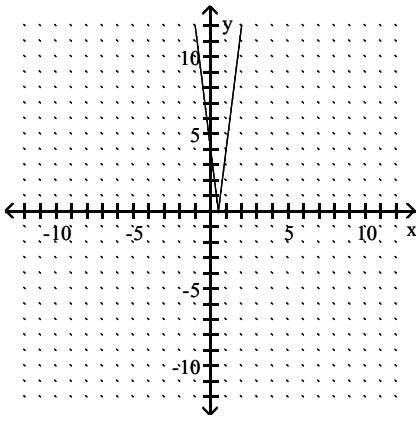

Answer: B

144) y = | x − 6 | − 9

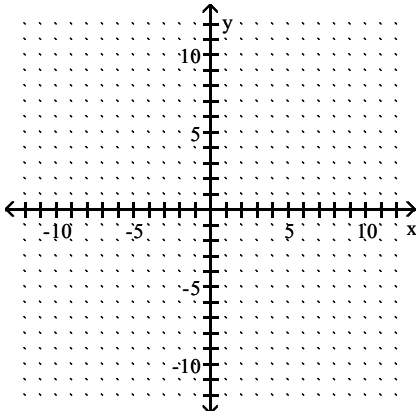

A) D = (−∞, ∞), R = [− 9, ∞)

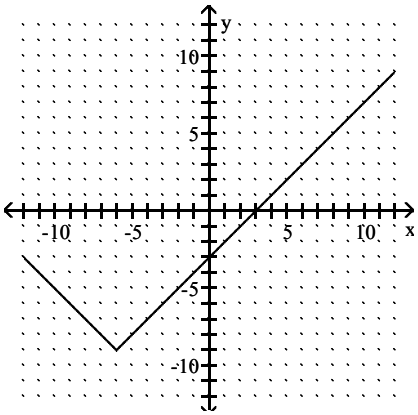

B) D = (−∞, ∞), R = [0, ∞)

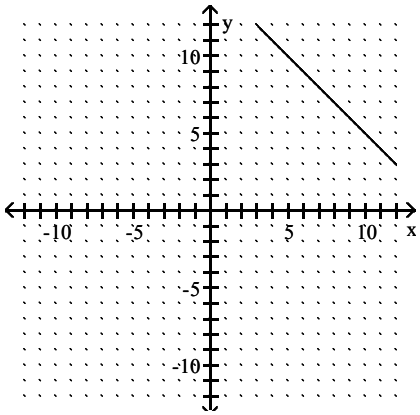

Precalculus Functions and Graphs 4th edition Dugopolski Test Bank

C) D = (−∞, ∞), R = (−∞, ∞)

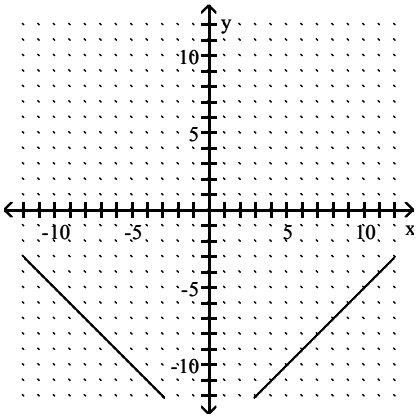

D) D = (−∞, ∞), R = [− 9, ∞)

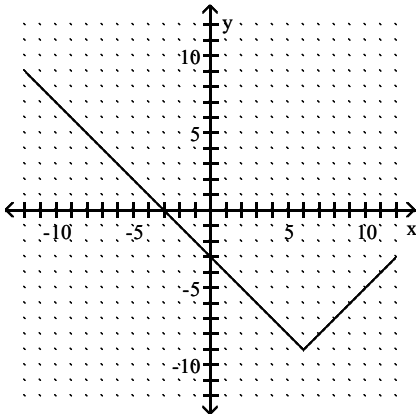

Answer: D

145) $y = 3|x - 8| - 2$

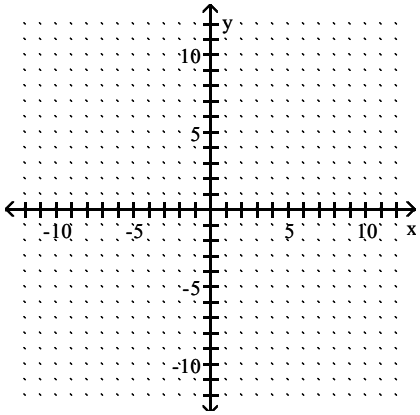

A) D = (−∞, ∞), R = (0, ∞)

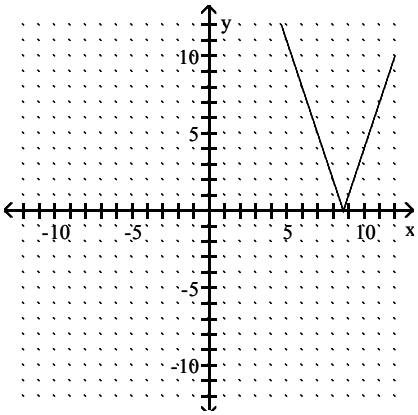

B) D = (−∞, ∞), R =(−∞, ∞)

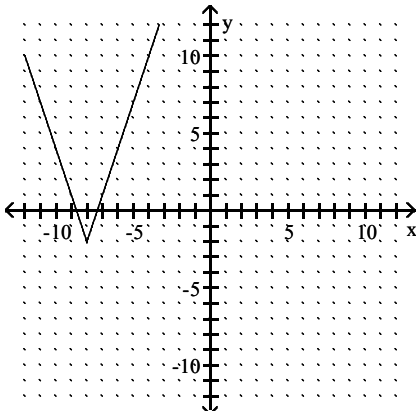

Precalculus Functions and Graphs 4th edition Dugopolski Test Bank

C) D = (−∞, ∞), R = (−∞, ∞)

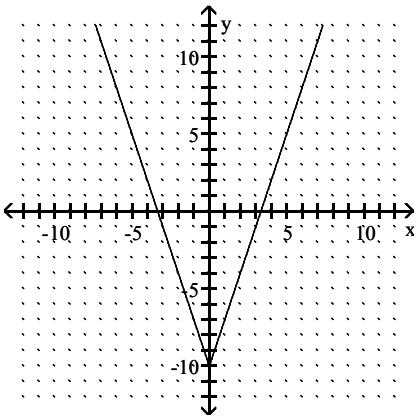

D) D = (−∞, ∞), R = [− 2, ∞)

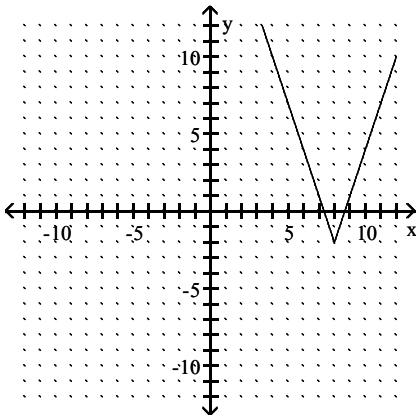

Answer: D

146) $y = -\sqrt{x+2} + 1$

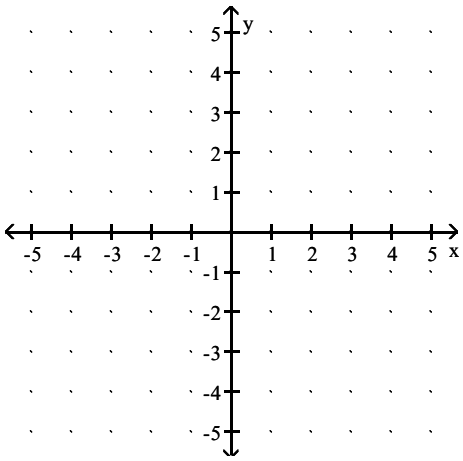

A) D = [0, ∞), R = [1, ∞)

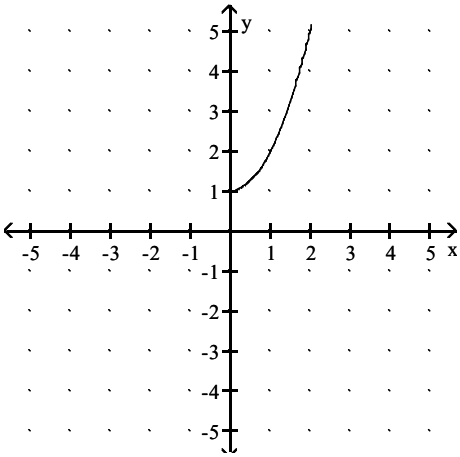

B) D = [−2, ∞), R = [1, ∞)

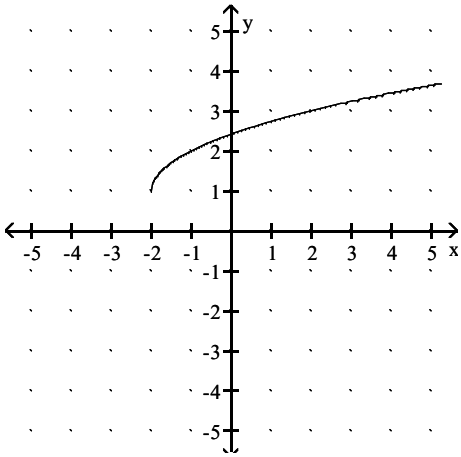

Precalculus Functions and Graphs 4th edition Dugopolski Test Bank

C) D = [−2, ∞), R = (−∞, 1]

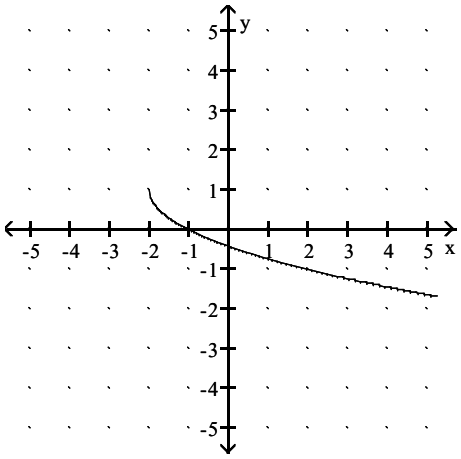

D) D = (−∞, 2], R = (−∞, 1]

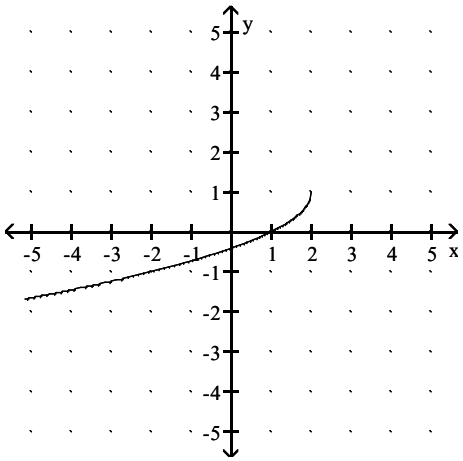

Answer: C

List the symmetries of the given function, if there are any. Otherwise, state "No symmetry".

147) $f(x) = -3x^2 + 4$

A) y–axis B) Origin C) x–axis D) No symmetry

Answer: A

148) $f(x) = |3x| + 2$

A) x–axis B) y–axis C) Origin D) No symmetry

Answer: B

149) $f(x) = -4x^3$

A) y–axis B) x–axis C) Origin D) No symmetry

Answer: C

150) $f(x) = 4x^2 + 2$

A) x–axis, y–axis B) Origin C) y–axis D) x–axis

Answer: C

151) $f(x) = -8x^3 + 7x$

A) x–axis B) x–axis, origin C) Origin D) x–axis, y–axis

Answer: C

152) $f(x) = -4x^5 + 4x^3$

A) x–axis, y–axis, origin B) Origin

C) y–axis D) No symmetry

Answer: B

153) $f(x) = -0.13x^2 + |x| + 2$

A) Origin B) y–axis C) x–axis D) No symmetry

Answer: B

154) $f(x) = -7x^4 - 6x + 8$

A) x–axis B) Origin C) x–axis, origin D) No symmetry

Answer: D

Precalculus Functions and Graphs 4th edition Dugopolski Test Bank

155) $f(x) = |x + 8|$

A) $x = 8$ B) y–axis C) $x = -8$, origin D) $x = -8$

Answer: D

156) $f(x) = x + \frac{1}{x^2}$

A) Origin B) y–axis, origin C) y–axis D) No symmetry

Answer: D

Determine whether the function is even, odd, or neither.

157) $f(x) = 4x^2 - 5$

A) Neither B) Odd C) Even

Answer: C

158) $f(x) = (x + 9)(x + 9)$

A) Odd B) Even C) Neither

Answer: C

159) $f(x) = -5x^3 + 3x$

A) Even B) Odd C) Neither

Answer: B

160) $f(x) = -8x^5 + 8x^3$

A) Even B) Neither C) Odd

Answer: C

161) $f(x) = 0.29x^2 + |x| + 3$

A) Neither B) Odd C) Even

Answer: C

162) $f(x) = -9x^4 + 5x - 8$

A) Even B) Neither C) Odd

Answer: B

163) $f(x) = |x^2 + x|$

A) Even B) Odd C) Neither

Answer: C

164) $f(x) = x^3 - \frac{1}{x}$

A) Neither B) Even C) Odd

Answer: C

Precalculus Functions and Graphs 4th edition Dugopolski Test Bank

The graph of the given function is drawn with a solid line. The graph of a function, g(x), transformed from this one is drawn with a dashed line. Find a formula for g(x).

165) $f(x) = x^2$

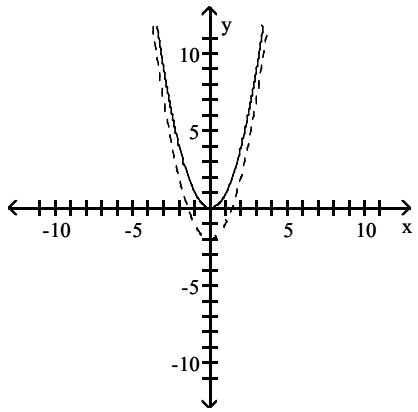

A) $g(x) = x^2 - 2$ B) $g(x) = (x - 2)^2$ C) $g(x) = x^2 + 2$ D) $g(x) = 2x^2$

Answer: A

166) $f(x) = | x |$

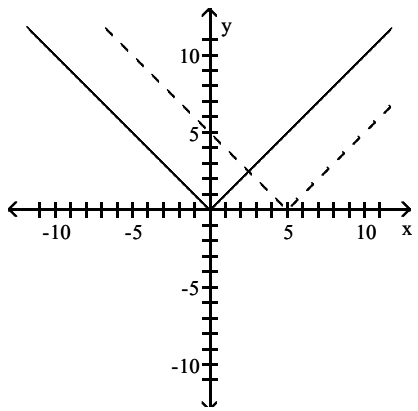

A) $g(x) = | x | - 5$ B) $g(x) = 5x^3$ C) $g(x) = | x - 5 |$ D) $g(x) = | x + 5 |$

Answer: C

167) $f(x) = x^3$

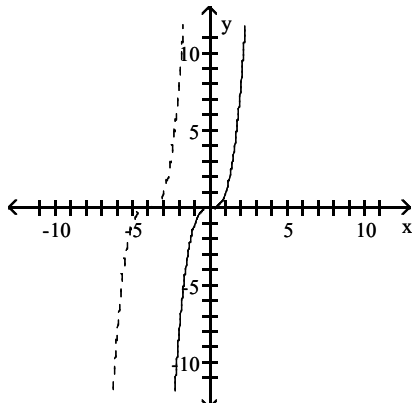

A) $g(x) = x^3 + 4$ B) $g(x) = (x - 4)^3$ C) $g(x) = (x + 4)^3$ D) $g(x) = 4x^3$

Answer: C

Precalculus Functions and Graphs 4th edition Dugopolski Test Bank

168) $f(x) = |x|$

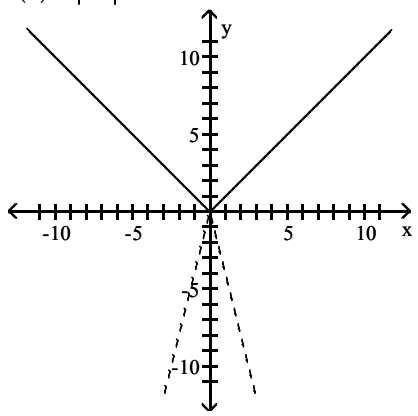

A) $g(x) = |x + 4|$ B) $g(x) = |x| - 4$ C) $g(x) = -4|x|$ D) $g(x) = |x - 4|$

Answer: C

169) $f(x) = x^2$

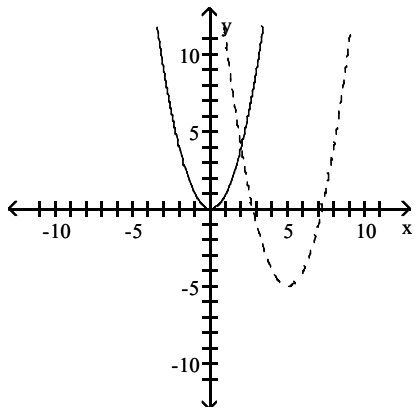

A) $g(x) = -6(x - 5)^2$ B) $g(x) = (x - 5)^2 - 5$ C) $g(x) = (x - 6)^2 - 5$ D) $g(x) = 6(x + 5)^2$

Answer: B

170) $f(x) = x^2$

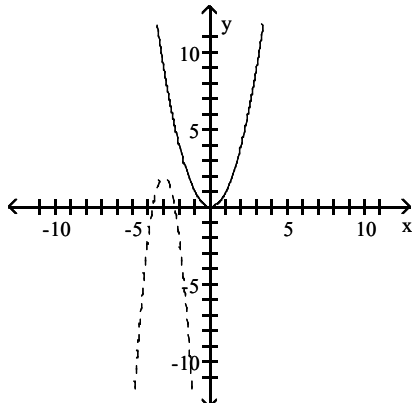

A) $g(x) = (x + 3)^2 + 2$ B) $g(x) = -4(x + 3)^2$

C) $g(x) = 4(x - 3)^2 - 2$ D) $g(x) = -4(x + 3)^2 + 2$

Answer: D

Precalculus Functions and Graphs 4th edition Dugopolski Test Bank

171) $f(x) = \sqrt[3]{x}$

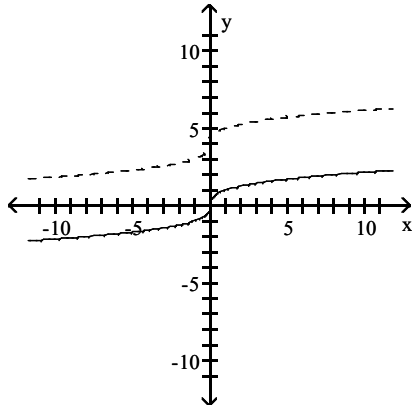

A) $g(x) = \sqrt[3]{x} + 4$ B) $g(x) = \sqrt[3]{x - 4}$ C) $g(x) = \sqrt[3]{x + 4}$ D) $g(x) = 4\sqrt[3]{x}$

Answer: A

172) $f(x) = |x|$

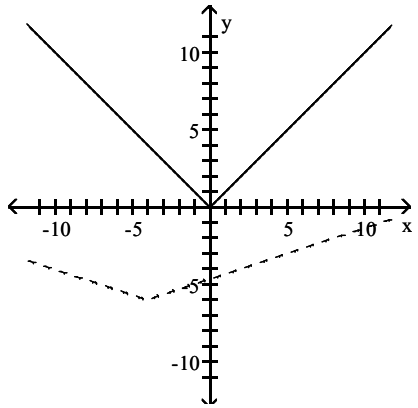

A) $g(x) = 6|x - 4| + 0.33$ B) $g(x) = 0.33|x - 4| + 6$

C) $g(x) = 6|x + 4| - 0.33$ D) $g(x) = 0.33|x + 4| - 6$

Answer: D

173) $f(x) = \sqrt[3]{x}$

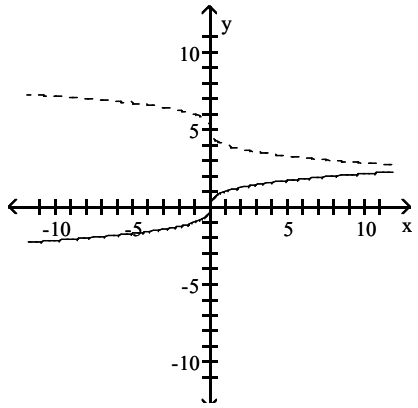

A) $g(x) = \sqrt[3]{x - 5}$ B) $g(x) = \sqrt[3]{-x} + 5$ C) $g(x) = \sqrt[3]{x}$ D) $g(x) = 5\sqrt[3]{-x}$

Answer: B

Precalculus Functions and Graphs 4th edition Dugopolski Test Bank

Solve the inequality by reading the given graph. State the solution set using interval notation.

174) $x^2 + 4x < 2x + 8$ A related function is graphed below.

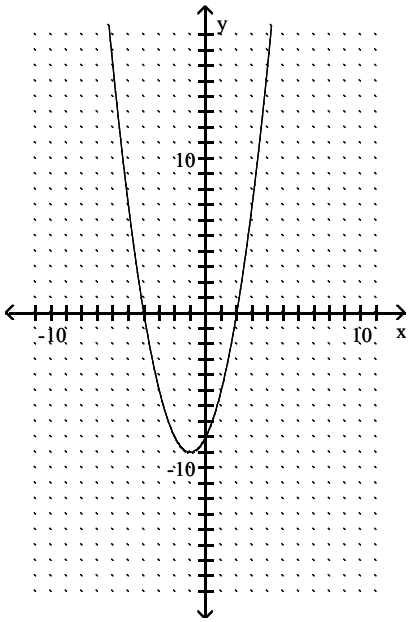

x–intercepts: (–4, 0), (2, 0)

A) $(-\infty, -4) \cup (2, \infty)$ B) (–4, 2) C) (2, 4) D) [–4, 2]

Answer: B

175) $-x^2 + 2x \le -5x + 10$ A related function is graphed below.

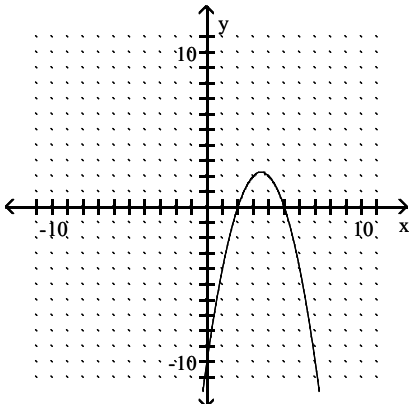

x–intercepts: (2, 0), (5, 0)

A) $(-\infty, -2) \cup (5, \infty)$ B) [2, 5] C) $(2, 5) \cup (5, \infty)$ D) $(-\infty, 2] \cup [5, \infty)$

Answer: D

Precalculus Functions and Graphs 4th edition Dugopolski Test Bank

176) $x^3 - 5x^2 \le 9x - 45$ A related function is graphed below.

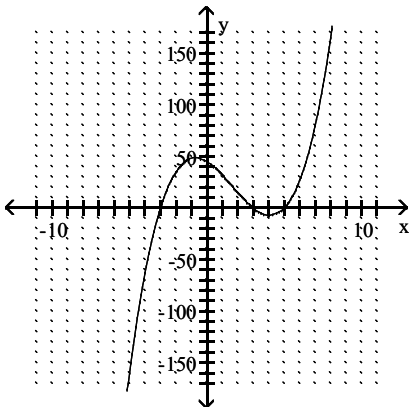

x–intercepts: (–3, 0), (3, 0), (5, 0)

A) $(-\infty, -3) \cup (3, 5)$ B) $(-\infty, -3] \cup [3, 5]$ C) $(-\infty, -3) \cup (3, \infty)$ D) $(-\infty, -3] \cup [3, \infty)$

Answer: B

177) $-x^3 + 2x^2 + 25x - 50 < 0$ A related function is graphed below.

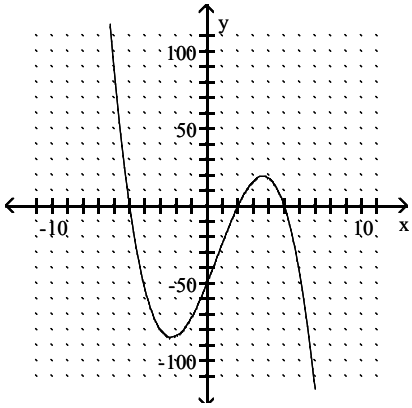

x–intercepts: (–5, 0), (2, 0), (5, 0)

A) $(5, \infty)$ B) $(-5, 2) \cup (5, \infty)$ C) $[-5, 2] \cup [5, \infty)$ D) $(-\infty, -5) \cup (2, 5)$

Answer: B

Graph the following function by transforming the given graph of y = f(x).

178) Sketch the graph of y = f(–x).

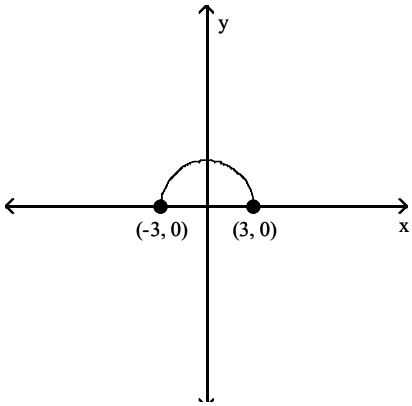

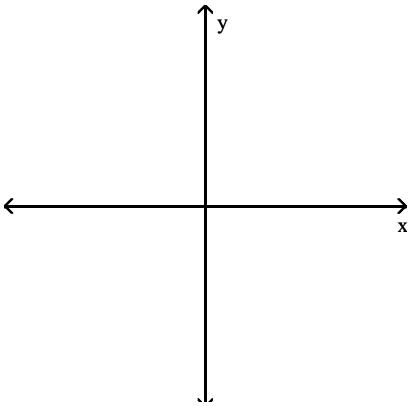

Precalculus Functions and Graphs 4th edition Dugopolski Test Bank

A)

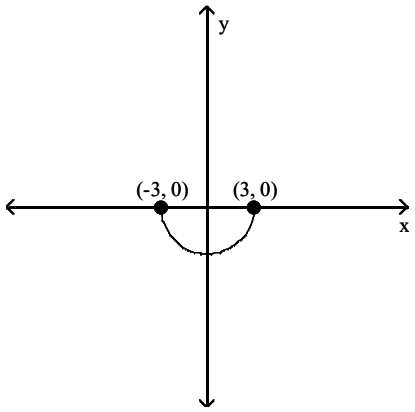

B)

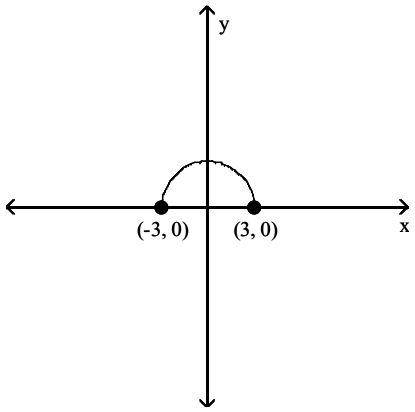

C)

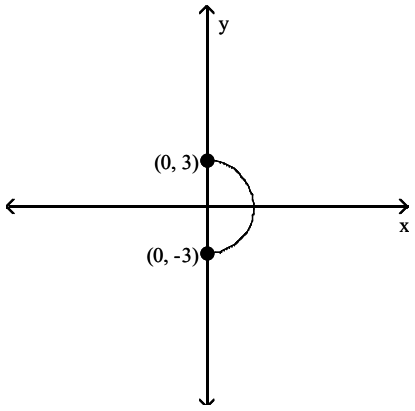

D)

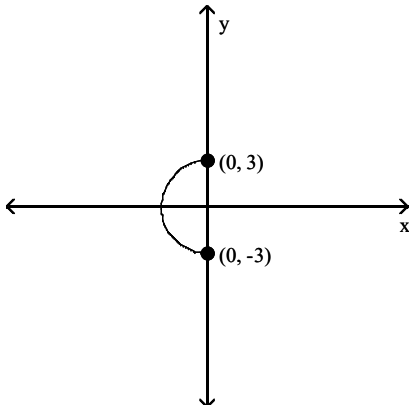

Answer: B

179) Sketch the graph of y = –f(x).

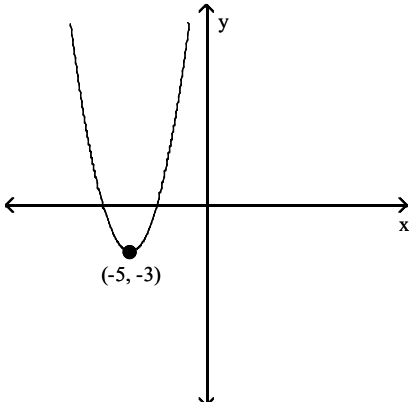

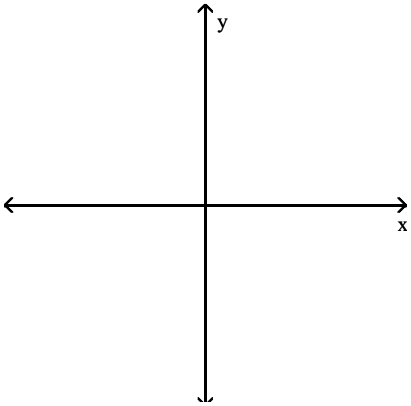

Precalculus Functions and Graphs 4th edition Dugopolski Test Bank

A)

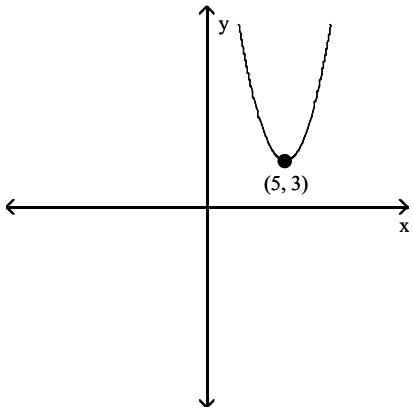

B)

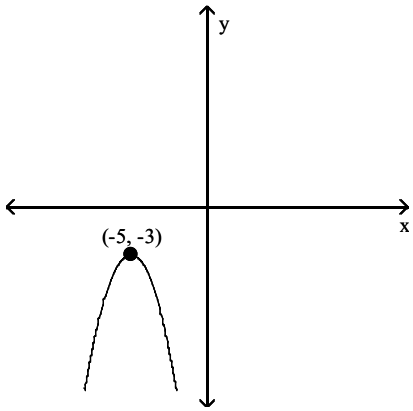

C)

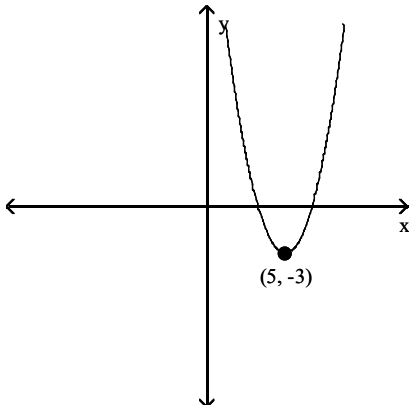

D)

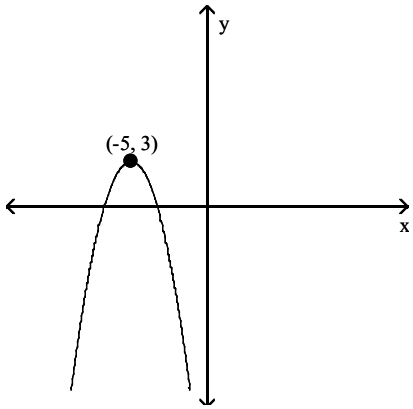

Answer: D

180) Sketch the graph of y = 2f(x).

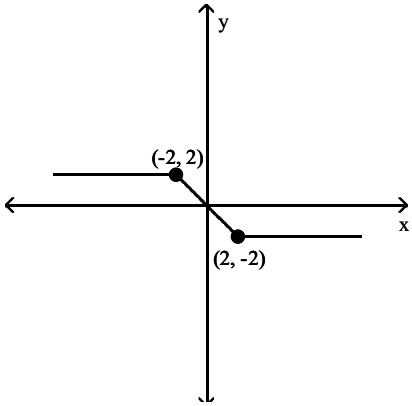

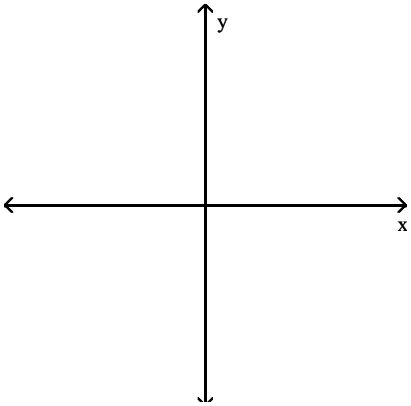

Precalculus Functions and Graphs 4th edition Dugopolski Test Bank

A)

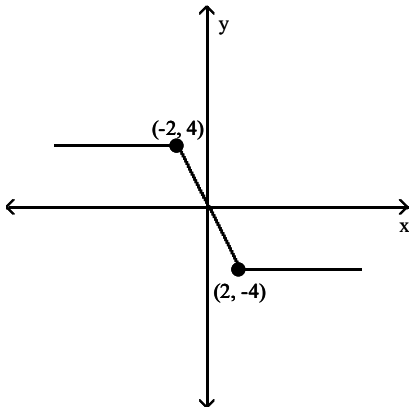

B)

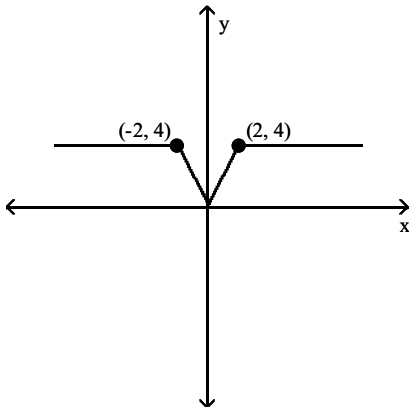

C)

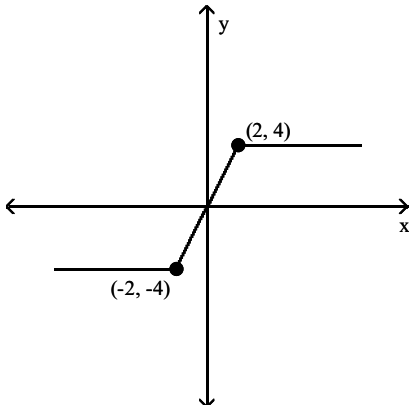

D)

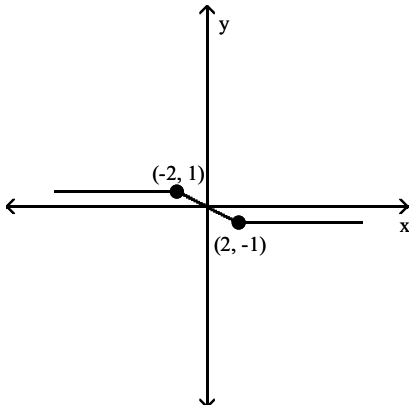

Answer: A

181) Sketch the graph of y = f(x – 3).

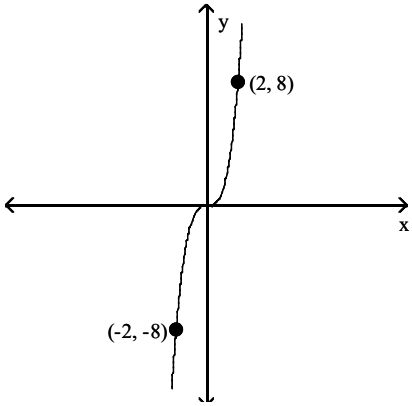

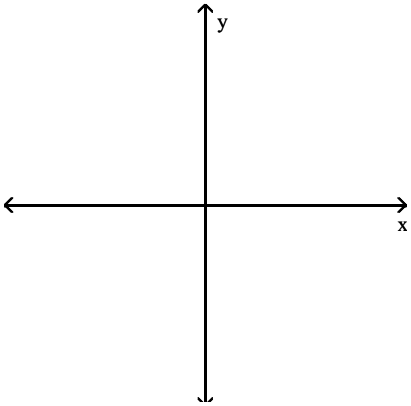

Precalculus Functions and Graphs 4th edition Dugopolski Test Bank

A)

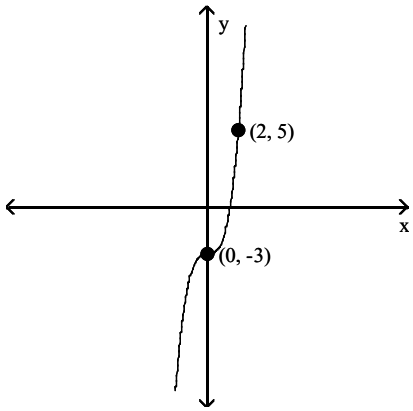

B)

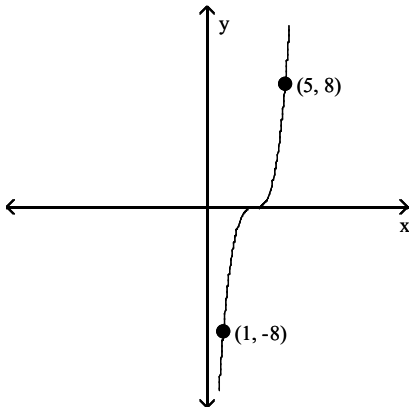

C)

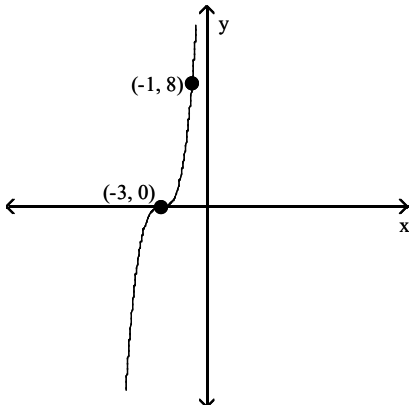

D)

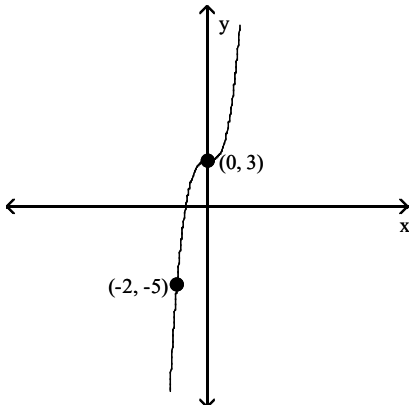

Answer: B

182) Sketch the graph of y = –f(x).

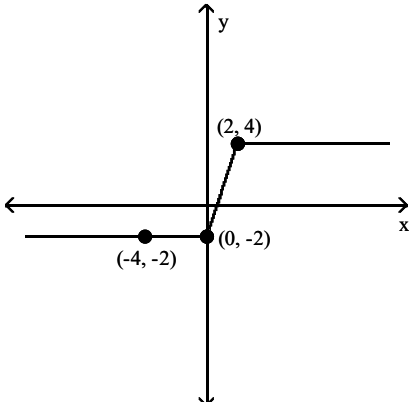

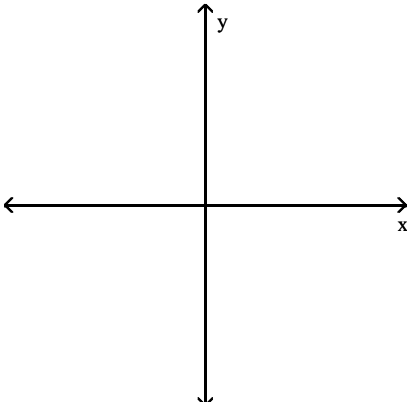

Precalculus Functions and Graphs 4th edition Dugopolski Test Bank

A)

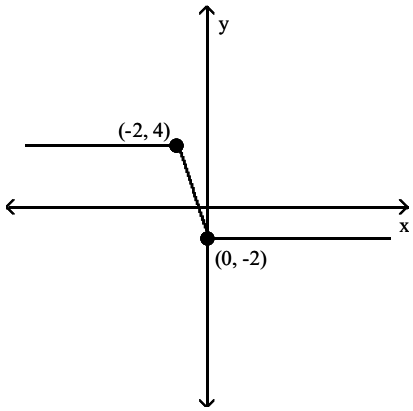

B)

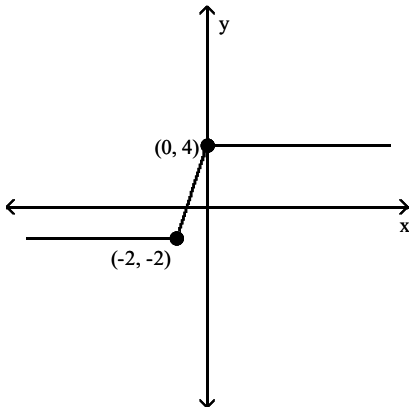

C)

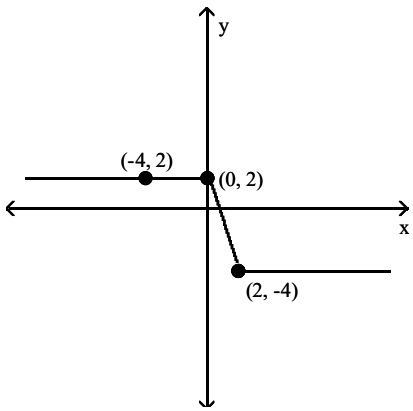

D)

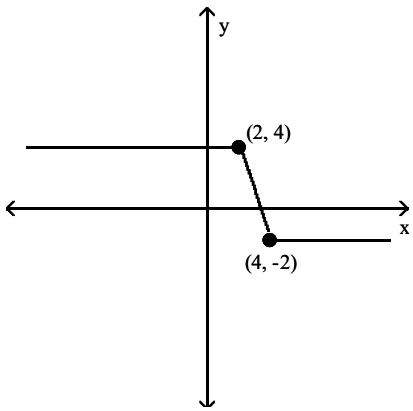

Answer: C

Solve the problem.

183) The function $h = -16t^2 + 48t + 200$ gives the height h, in feet, of a coin tossed upward from a balcony 200 ft high with an initial velocity of 48 ft/sec. During what interval of time will the coin be at a height of at least 40 ft?

A) $0 \le t \le 5$ B) $5 \le t \le 10$ C) $0 \le t \le 1$ D) $4 \le t \le 5$

Answer: A

184) The function $h(t) = -16t^2 + 144t - 288$ gives the height h, in feet, of a flare fired from the bottom of a gorge 288 feet deep with an initial velocity of 144 ft/sec. The flare fired is visible only when it is above the rim. During what interval can the flare be seen?

A) $3 < t < 6$ B) $9 < t < 12$ C) $6 < t < 9$ D) $0 < t < 3$

Answer: A

185) The profit made when t units are sold, $t > 0$, is given by $P = t^2 - 23t + 132$. Determine the number of units to be sold for which $P < 0$ (a loss is taken).

A) $t = 11$ or $t = 12$ B) $t < 11$ or $t > 12$ C) $11 < t < 12$ D) $t > 0$

Answer: C

186) If a rocket is propelled upward from ground level, its height in meters after t seconds is given by $h = -9.8t^2 + 78.4t$. During what interval of time will the rocket be higher than 117.6 m?

A) $6 < t < 4$ B) $0 < t < 2$ C) $2 < t < 6$ D) $4 < t < 8$

Answer: C

Precalculus Functions and Graphs 4th edition Dugopolski Test Bank

187) A rectangular enclosure must have an area of at least 4200 yd^2. If 260 yd of fencing is to be used, and the width cannot exceed the length, within what limits must the width of the enclosure lie?

A) $60 \le w \le 70$ B) $0 \le w \le 60$ C) $60 \le w \le 65$ D) $65 \le w \le 70$

Answer: C

Evaluate.

188) Find $(f + g)(-3)$ given $f(x) = x + 3$ and $g(x) = x + 6$.

A) 3 B) –3 C) –15 D) –9

Answer: A

189) Find $(f - g)(-4)$ given $f(x) = -4x^2 + 7$ and $g(x) = x - 3$.

A) –50 B) –56 C) –58 D) 61

Answer: A

190) Find $(f \cdot g)(-4)$ given $f(x) = x + 3$ and $g(x) = 4x^2 + 12x + 6$.

A) 26 B) –154 C) –490 D) –22

Answer: D

191) Find $(f/g)(-2)$ given $f(x) = 4x - 6$ and $g(x) = 3x^2 + 14x + 5$.

A) $\frac{14}{11}$ B) $-\frac{3}{11}$ C) $-\frac{4}{11}$ D) $\frac{3}{2}$

Answer: A

192) Given $f(x) = 5x - 2$ and $g(x) = -7x + 9$, find $(f + g)(x)$.

A) $-2x^2 + 7$ B) $12x - 7$ C) $-3x + 11$ D) $-2x + 7$

Answer: D

193) Given $f(x) = 3x - 4$ and $g(x) = -8x + 8$, find $(f - g)(x)$.

A) $-5x^2 + 12$ B) $11x + 12$ C) $-5x - 4$ D) $11x - 12$

Answer: D

194) Given $f(x) = 4x + 4$ and $g(x) = x^2 + 6x - 7$, find $(f \cdot g)(x)$.

A) $x^2 - 10x + 3$ B) $4x^3 + 28x^2 - 4x - 28$

C) $5x^3 + 30x^2 + 4x - 27$ D) $x^3 - 28x^2 - 22x - 31$

Answer: B

Find the indicated function.

195) Let $f = \{(-7, 8), (-4, -8), (9, 4)\}$ and $g = \{(-7, 9), (4, -8), (9, -3)\}$. Find $f + g$.

A) $\{(-7, 17), (9, 1)\}$ B) $\{(-7, 17), (-4, -16), (9, 1)\}$

C) $\{(-14, 17), (0, -16), (18, 1)\}$ D) $\{(-14, 17), (18, 1)\}$

Answer: A

196) Let $f = \{(-6, 3), (5, -2), (9, 3)\}$ and $g = \{(-6, -1), (6, 6), (9, -7)\}$. Find $f \cdot g$.

A) $\{(36, -3), (30, -12), (81, -21)\}$ B) $\{(-6, -3), (5, -12), (9, -21)\}$

C) $\{(-6, -3), (9, -21)\}$ D) $\{(36, -3), (81, -21)\}$

Answer: C

Precalculus Functions and Graphs 4th edition Dugopolski Test Bank

For the pair of functions, perform the indicated operation.

197) $f(x) = 4x - 3$, $g(x) = 7x - 9$
Find $f - g$.
A) $11x - 12$ B) $-3x + 6$ C) $-3x - 12$ D) $3x - 6$
Answer: B

198) $f(x) = 2x^2 - 5x$, $g(x) = x^2 - 2x - 15$
Find f/g.
A) $\frac{2x - 5}{-2}$ B) $\frac{2x^2 - 5x}{x^2 - 2x - 15}$ C) $\frac{2x}{x + 1}$ D) $\frac{2 - x}{15}$
Answer: B

199) $f(x) = 4 - 9x$, $g(x) = -2x + 9$
Find $f + g$.
A) $-11x + 13$ B) $-2x + 4$ C) $-7x + 13$ D) $2x$
Answer: A

200) $f(x) = \sqrt{4x + 3}$, $g(x) = \sqrt{9x - 16}$
Find $f \cdot g$.
A) $(3x - 4)(\sqrt{4x + 3})$ B) $(4x + 3)(9x - 16)$
C) $(\sqrt{4x + 3})(\sqrt{9x - 16})$ D) $(4x + 3)(3x - 4)$
Answer: C

201) $f(x) = 5x + 8$, $g(x) = 4x - 9$
Find $f \cdot g$.
A) $20x^2 + 23x - 72$ B) $20x^2 - 72$ C) $9x^2 - 13x - 1$ D) $20x^2 - 13x - 72$
Answer: D

Find the specified domain.

202) For $f(x) = 2x - 5$ and $g(x) = \sqrt{x + 8}$, what is the domain of $f + g$?
A) $[-8, \infty)$ B) $[8, \infty)$ C) $(-8, 8)$ D) $[0, \infty)$
Answer: A

203) For $f(x) = 2x - 5$ and $g(x) = \sqrt{x + 7}$, what is the domain of f/g?
A) $[0, \infty)$ B) $(-7, \infty)$ C) $(-7, 7)$ D) $[7, \infty)$
Answer: B

204) For $f(x) = 2x - 5$ and $g(x) = \sqrt{x + 9}$, what is the domain of $f \circ g$?
A) $(-9, 9)$ B) $[-9, \infty)$ C) $[0, \infty)$ D) $[9, \infty)$
Answer: B

205) For $f(x) = 2x - 5$ and $g(x) = \sqrt{x + 4}$, what is the domain of $g \circ f$?
A) $[0.5, \infty)$ B) $[\infty, 0.5)$ C) $(-4, 4)$ D) $[4, \infty)$
Answer: A

206) For $f(x) = x^2 - 36$ and $g(x) = 2x + 3$, what is the domain of $f - g$?
A) $[0, \infty)$ B) $(-\infty, \infty)$ C) $(-6, 6)$ D) $[6, \infty)$
Answer: B

Precalculus Functions and Graphs 4th edition Dugopolski Test Bank

207) For $f(x) = x^2 - 49$ and $g(x) = 2x + 3$, what is the domain of f/g?

A) $\left[-\frac{3}{2}, \infty\right)$ B) $\left(-\infty, -\frac{3}{2}\right) \cup \left(-\frac{3}{2}, \infty\right)$ C) $(-7, 7)$ D) $(-\infty, \infty)$

Answer: B

208) For $f(x) = x^2 - 16$ and $g(x) = 2x + 3$, what is the domain of g/f?

A) $\left(-\infty, \frac{3}{2}\right) \cup \left(-\frac{3}{2}, \infty\right)$ B) $\left[-\frac{3}{2}, \infty\right)$

C) $(-\infty, -4) \cup (-4, 4) \cup (4, \infty)$ D) $(-\infty, \infty)$

Answer: C

209) For $f(x) = x^2 - 25$ and $g(x) = 2x + 3$, what is the domain of $f \circ g$?

A) $[0, \infty)$ B) $[5, \infty)$ C) $(-\infty, \infty)$ D) $(-5, 5)$

Answer: C

210) For $f(x) = \sqrt{x - 4}$ and $g(x) = \frac{1}{x - 8}$, what is the domain of $f \cdot g$?

A) $(4, 8) \cup (8, \infty)$ B) $[4, \infty)$ C) $[0, 8) \cup (8, \infty)$ D) $[4, 8) \cup (8, \infty)$

Answer: D

211) For $g(x) = \sqrt{x + 6}$ and $h(x) = \frac{1}{x - 9}$, what is the domain of $h \circ g$?

A) $[0, 9) \cup (9, \infty)$ B) $[-6, 9) \cup (9, \infty)$ C) $[-6, 75) \cup (75, \infty)$ D) $[0, 75) \cup (75, \infty)$

Answer: C

Find the indicated composition of functions.

212) Let $f = \{(-7, -9), (-1, -7), (7, -2)\}$ and $g = \{(-9, 1), (-2, 8), (9, 9)\}$. Find $g \circ f$.

A) $\{(-7, 1), (-1, 9), (7, 8)\}$ B) $\{(-7, 1), (7, 8)\}$

C) $\{(63, -9), (2, -56), (63, -18)\}$ D) $\{(-7, 1), (-1, 8), (7, 9)\}$

Answer: B

213) Let $f = \{(-2, -7), (9, 7)\}$ and $g = \{(-7, 9), (4, -9), (6, -7)\}$. Find $f \circ g$.

A) $\{(-2, 9), (9, -9)\}$ B) $\{(-2, 9)\}$ C) $\{(-7, 7)\}$ D) $\{(-7, 7), (4, -7)\}$

Answer: C

Find the requested function value.

214) Find $(g \circ f)(21)$ when $f(x) = \frac{x - 9}{2}$ and $g(x) = 9x + 8$.

A) 94 B) 102 C) 1182 D) 62

Answer: D

215) Find $(f \circ g)(3)$ when $f(x) = -8x + 1$ and $g(x) = -6x^2 + 8x - 7$.

A) -53 B) 297 C) -3365 D) 9

Answer: B

Precalculus Functions and Graphs 4th edition Dugopolski Test Bank

216) Find $(g \circ f)(-8)$ when $f(x) = 8x - 2$ and $g(x) = 6x^2 + 2x - 7$.

A) −535 B) 25,997 C) 2886 D) −570

Answer: B

217) Find $(h \circ g \circ f)(29)$ when $f(x) = \frac{x - 1}{7}$, $g(x) = 5 - x^2$, and $h(x) = |x - 7|$.

A) 18 B) −4 C) −18 D) 4

Answer: A

218) $(g \circ f)(x)$: $f(x) = \frac{x - 10}{2}$, $g(x) = 2x + 10$

A) $x + 20$ B) $x - 5$ C) x D) $2x + 10$

Answer: C

219) $(g \circ f)(x)$: $f(x) = 4x^2 + 3x + 8$, $g(x) = 3x - 4$

A) $4x^2 + 3x + 4$ B) $12x^2 + 9x + 28$ C) $12x^2 + 9x + 20$ D) $4x^2 + 9x + 20$

Answer: C

Find the requested composition of functions.

220) Given $f(x) = 6x + 11$ and $g(x) = 5x - 1$, find $(f \circ g)(x)$.

A) $30x + 54$ B) $30x + 5$ C) $30x + 17$ D) $30x + 10$

Answer: B

221) Given $f(x) = -6x + 8$ and $g(x) = 3x + 5$, find $(g \circ f)(x)$.

A) $-18x - 19$ B) $-18x + 38$ C) $-18x + 29$ D) $18x + 29$

Answer: C

222) Given $f(x) = \frac{2}{x - 4}$ and $g(x) = \frac{3}{5x}$, find $(f \circ g)(x)$.

A) $\frac{3x - 12}{10x}$ B) $\frac{2x}{3 - 20x}$ C) $\frac{10x}{3 - 20x}$ D) $\frac{10x}{3 + 20x}$

Answer: C

223) Given $f(x) = \frac{x - 5}{7}$ and $g(x) = 7x + 5$, find $(g \circ f)(x)$.

A) x B) $x - \frac{5}{7}$ C) $7x + 30$ D) $x + 10$

Answer: A

224) Given $f(x) = \sqrt{x + 6}$ and $g(x) = 8x - 10$, find $(f \circ g)(x)$.

A) $2\sqrt{2x + 1}$ B) $8\sqrt{x + 6} - 10$ C) $2\sqrt{2x - 1}$ D) $8\sqrt{x - 4}$

Answer: C

225) Given $f(x) = 4x^2 + 6x + 3$ and $g(x) = 6x - 6$, find $(g \circ f)(x)$.

A) $4x^2 + 6x - 3$ B) $24x^2 + 36x + 12$ C) $24x^2 + 36x + 24$ D) $4x^2 + 36x + 12$

Answer: B

Precalculus Functions and Graphs 4th edition Dugopolski Test Bank

226) Given $f(x) = \frac{5}{x}$ and $g(x) = 7x^6$, find $(g \circ f)(x)$.

A) $\frac{109{,}375}{x^6}$ B) $\frac{5}{7x^6}$ C) $\frac{7x^6}{5}$ D) $\frac{7x^6}{15{,}625}$

Answer: A

Find functions f and g so that F(x) = (f ∘ g) (x).

227) $F(x) = \frac{1}{x^2 - 2}$

A) $f(x) = \frac{1}{x}$, $g(x) = x^2 - 2$

B) $f(x) = \frac{1}{x^2}$, $g(x) = -\frac{1}{2}$

C) $f(x) = \frac{1}{x^2}$, $g(x) = x - 2$

D) $f(x) = \frac{1}{2}$, $g(x) = x^2 - 2$

Answer: A

228) $F(x) = |7x + 5|$

A) $f(x) = -|x|$, $g(x) = 7x + 5$

B) $f(x) = |x|$, $g(x) = 7x + 5$

C) $f(x) = |-x|$, $g(x) = 7x - 5$

D) $f(x) = x$, $g(x) = 7x + 5$

Answer: B

229) $F(x) = \frac{8}{x^2} + 2$

A) $f(x) = \frac{8}{x^2}$, $g(x) = 2$

B) $f(x) = \frac{1}{x}$, $g(x) = \frac{8}{x} + 2$

C) $f(x) = x$, $g(x) = \frac{8}{x} + 2$

D) $f(x) = x + 2$, $g(x) = \frac{8}{x^2}$

Answer: D

230) $F(x) = \frac{2}{\sqrt{3x + 10}}$

A) $f(x) = \sqrt{3x + 10}$, $g(x) = 2$

B) $f(x) = \frac{2}{\sqrt{x}}$, $g(x) = 3x + 10$

C) $f(x) = 2$, $g(x) = \sqrt{3 + 10}$

D) $f(x) = \frac{2}{x}$, $g(x) = 3x + 10$

Answer: B

231) $F(x) = (8x - 6)^5$

A) $f(x) = 8x^5$, $g(x) = x - 6$

B) $f(x) = (8x)^5$, $g(x) = -6$

C) $f(x) = 8x - 6$, $g(x) = x^5$

D) $f(x) = x^5$, $g(x) = 8x - 6$

Answer: D

232) $F(x) = \sqrt{37x^2 + 67}$

A) $f(x) = 37x^2 + 67$, $g(x) = \sqrt{x}$

B) $f(x) = \sqrt{37x + 67}$, $g(x) = x^2$

C) $f(x) = \sqrt{x}$, $g(x) = 37x^2 + 67$

D) $f(x) = \sqrt{37x^2}$, $g(x) = \sqrt{67}$

Answer: C

Precalculus Functions and Graphs 4th edition Dugopolski Test Bank

Use the two given functions to write y as a function of x.

233) $y = -7t + 6$, $t = -4x - 4$

A) $y = 28x - 4$ B) $y = 28x + 2$ C) $y = -7x + 34$ D) $y = 28x + 34$

Answer: D

234) $y = 2m^2 + 8$, $m = x - 3$

A) $y = 2x^2 - 6x + 17$ B) $y = 2x^2 + 26$ C) $y = 2x^2 - 12x + 18$ D) $y = 2x^2 - 12x + 26$

Answer: D

Find the function from the given verbal description of the function.

235) If m is the square of n and y is m minus 5, then write y as a function of n.

A) $y = (n - 5)^2$ B) $y = n^2 - 5$ C) $y = 5 - n^2$ D) $y = 2n - 5$

Answer: B

236) If w is equal to the square root of x, y is the sum of w and 1, and z is y divided by 6, then write z as a function of x.

A) $z = \frac{\sqrt{x} + 1}{6}$ B) $z = \frac{\sqrt{x}}{6} + 1$ C) $z = \frac{\sqrt{x+1}}{6}$ D) $z = \sqrt{\frac{x+1}{6}}$

Answer: A

Solve the problem.

237) A balloon (in the shape of a sphere) is being inflated. The radius is increasing at a rate of 4 cm per second. Find a function, r(t), for the radius in terms of t. Find a function, V(r), for the volume of the balloon in terms of r. Find $(V \circ r)(t)$.

A) $(V \circ r)(t) = \frac{1024\pi\sqrt{t}}{3}$ B) $(V \circ r)(t) = \frac{112\pi t^3}{3}$

C) $(V \circ r)(t) = \frac{256\pi t^3}{3}$ D) $(V \circ r)(t) = \frac{320\pi t^2}{3}$

Answer: C

238) At Allied Electronics, production has begun on the X–15 Computer Chip. The total revenue function is given by $R(x) = 46x - 0.3x^2$ and the total cost function is given by $C(x) = 11x + 15$, where x represents the number of boxes of computer chips produced. The total profit function, P(x), is such that $P(x) = R(x) - C(x)$. Find P(x).

A) $P(x) = 0.3x^2 + 35x - 30$ B) $P(x) = 0.3x^2 + 24x - 45$

C) $P(x) = -0.3x^2 + 35x - 15$ D) $P(x) = -0.3x^2 + 24x + 15$

Answer: C

239) At Allied Electronics, production has begun on the X–15 Computer Chip. The total revenue function is given by $R(x) = 42x - 0.3x^2$ and the total profit function is given by $P(x) = -0.3x^2 + 33x - 12$, where x represents the number of boxes of computer chips produced. The total cost function, C(x), is such that $C(x) = R(x) - P(x)$. Find C(x).

A) $C(x) = -0.3x^2 + 18x + 12$ B) $C(x) = 10x + 17$

C) $C(x) = 9x + 12$ D) $C(x) = 11x + 8$

Answer: C

Precalculus Functions and Graphs 4th edition Dugopolski Test Bank

240) At Allied Electronics, production has begun on the X–15 Computer Chip. The total cost function is given by $C(x) = 9x + 16$ and the total profit function is given by $P(x) = -0.3x^2 + 35x - 16$, where x represents the number of boxes of computer chips produced. The total revenue function, R(x), is such that $R(x) = C(x) + P(x)$. Find R(x).

A) $R(x) = 43x - 0.6x^2$ B) $R(x) = 44x + 0.3x^2$ C) $R(x) = 46x - 0.3x^2$ D) $R(x) = 44x - 0.3x^2$

Answer: D

241) A stone is thrown into a pond. A circular ripple is spreading over the pond in such a way that the radius is increasing at the rate of 4.7 feet per second. Find a function, r(t), for the radius in terms of t. Find a function, A(r), for the area of the ripple in terms of r. Find $(A \circ r)(t)$.

A) $(A \circ r)(t) = 22.09\pi^2 t$ B) $(A \circ r)(t) = 22.09\pi t^2$

C) $(A \circ r)(t) = 4.7\pi t^2$ D) $(A \circ r)(t) = 9.4\pi t^2$

Answer: B

242) Ken is 6 feet tall and is walking away from a streetlight. The streetlight has its light bulb 14 feet above the ground, and Ken is walking at the rate of 4.2 feet per second. Find a function, d(t), which gives the distance Ken is from the streetlight in terms of time. Find a function, S(d), which gives the length of Ken's shadow in terms of d. Then find $(S \circ d)(t)$.

A) $(S \circ d)(t) = 3.99t$ B) $(S \circ d)(t) = 2.31t$ C) $(S \circ d)(t) = 7.1t$ D) $(S \circ d)(t) = 3.15t$

Answer: D

243) Ken is 6 feet tall and is walking away from a streetlight. The streetlight has its light bulb 14 feet above the ground, and Ken is walking at the rate of 5.2 feet per second. Find a function, d(t), which gives the distance Ken is from the streetlight in terms of time. Find a function, S(d), which gives the length of Ken's shadow in terms of d. Then find $(S \circ d)(t)$. What is the meaning of $(S \circ d)(t)$?

A) $(S \circ d)(t)$ gives the length of Ken's shadow in terms of his distance from the streetlight.
B) $(S \circ d)(t)$ gives the length of Ken's shadow in terms of time.
C) $(S \circ d)(t)$ gives the time in terms of Ken's distance from the streetlight.
D) $(S \circ d)(t)$ gives the distance Ken is from the streetlight in terms of time.

Answer: B

244) The volume of water added to a circular drum of radius r is given by $V_W = 30t$, where V_W is volume in cu ft and t is time in sec. Find the depth of water in a drum of radius 4 ft after adding water for 12 sec. (Round result to one decimal place.)

A) 14.4 ft B) 22.6 ft C) 2.7 ft D) 7.2 ft

Answer: D

245) A retail store buys 160 VCRs from a distributor at a cost of $170 each plus an overhead charge of $25 per order. The retail markup is 30% on the total cost. Find the profit on the sale of one VCR.

A) $50.95 B) $51.05 C) $51.00 D) $5105.00

Answer: B

Determine whether the function is invertible. If it is, find the inverse.

246) {(10, –17), (17, –6), (4, –8)}

A) {(–17, 10), (–6, 17), (–8, 4)} B) {(–17, 10), (4, 17), (–8, –6)}

C) {(10, –6), (10, 17), (–8, 4)} D) Not invertible

Answer: A

Precalculus Functions and Graphs 4th edition Dugopolski Test Bank

247) {(–16, –11), (5, –11), (14, –14)}

A) {(–11, –16), (14, 5), (–14, 12)}
B) {(–11, –16), (12, 5), (–14, 14)}
C) {(–16, 12), (–16, 5), (–14, 14)}
D) Not invertible

Answer: D

248) {(–9, 6), (–8, 6), (–7, 6), (–6, 4)}

A) {(6, –9), (4, 6), (–7, –8)}
B) {(6, –9), (–8, 6), (–7, 4)}
C) {(–9, 4), (–9, 6), (–7, –8)}
D) Not invertible

Answer: D

249) {(1, –5), (–1, 5), (9, 7), (–9, –7)}

A) {(–5, 1), (1, –1), (7, 9), (–7, –9)}
B) {(–5, 1), (5, –1), (7, 9), (–7, –9)}
C) {(–5, 1), (5, –1), (7, –1), (–7, –9)}
D) Not invertible

Answer: B

250) {(6, –2), (13, –1), (11, 0), (9, 1)}

A) {(–1, –2), (1, 11), (6, 11), (0, 0)}
B) {(–2, 6), (–1, 13), (0, 11), (1, 9)}
C) {(–1, –2), (–2, 11), (6, 13), (0, 0)}
D) Not invertible

Answer: B

Use the horizontal line test to determine whether the function is one–to–one.

251)

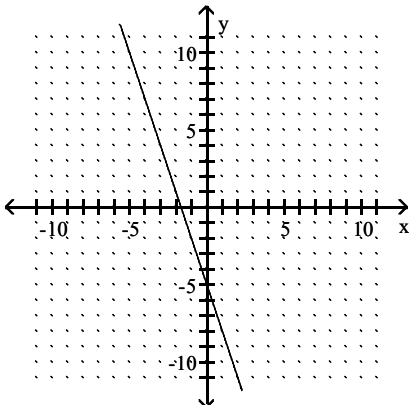

A) No
B) Yes

Answer: B

Precalculus Functions and Graphs 4th edition Dugopolski Test Bank

252)

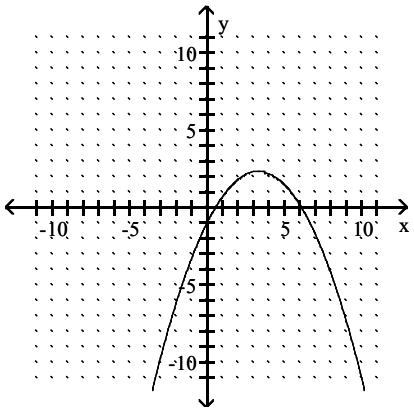

A) Yes B) No

Answer: B

253)

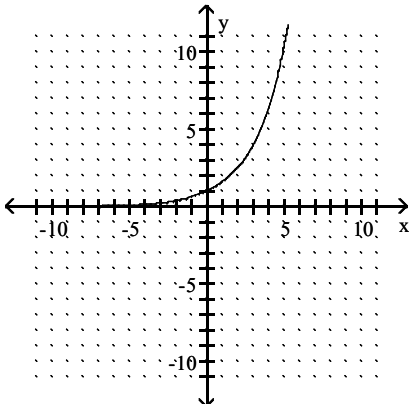

A) Yes B) No

Answer: A

254)

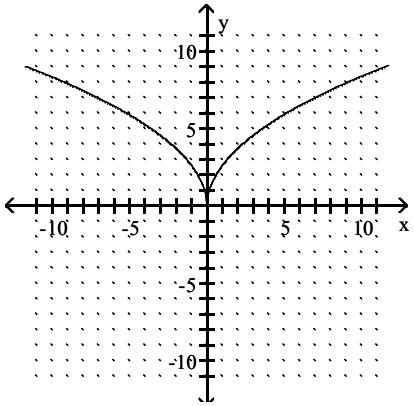

A) No B) Yes

Answer: A

Determine whether or not the function is one–to–one.

255) $f(x) = 6x - 2$

A) Yes B) No

Answer: A

Precalculus Functions and Graphs 4th edition Dugopolski Test Bank

256) $f(x) = x^2 - 3$

A) Yes B) No

Answer: B

257) $f(x) = 5x^3 - 6$

A) Yes B) No

Answer: A

258) $f(x) = x^3 + 2$

A) No B) Yes

Answer: B

259) $f(x) = 5x^2 + x$

A) No B) Yes

Answer: A

260) $f(x) = -\sqrt[3]{x + 82}$

A) No B) Yes

Answer: B

261) $f(x) = \dfrac{6}{x - 2}$

A) No B) Yes

Answer: B

262) $f(x) = \dfrac{x + 91}{x - 21}$

A) Yes B) No

Answer: A

Determine whether the function is invertible.

263) The function that pairs the temperature at 3:00 pm in your city in degrees Fahrenheit with the temperature in degrees Celsius.

A) Yes B) No

Answer: A

264) The function that pairs students' ID numbers with their GPAs.

A) No B) Yes

Answer: A

Solve.

265) Find f^{-1} for the function $f = \{(-5, -7), (5, 6), (-3, 4)\}$.

A) Not invertible B) $\{(-7, 6, 4)\}$

C) $\left\{\left(-\frac{1}{5}, -\frac{1}{7}\right), \left(\frac{1}{5}, \frac{1}{6}\right), \left(-\frac{1}{3}, \frac{1}{4}\right)\right\}$ D) $\{(-7, -5), (6, 5), (4, -3)\}$

Answer: D

Precalculus Functions and Graphs 4th edition Dugopolski Test Bank

266) Find $f^{-1}(8)$ and $(f^{-1} \circ f)(2)$ for the function $f = \{(9, -6), (2, -8), (-5, 8)\}$.

A) $\{-5, -8\}$ B) $\{8, -8\}$ C) $\left\{\frac{1}{8}, 2\right\}$ D) $\{-5, 2\}$

Answer: D

Determine whether the function is invertible by inspecting its graph on a graphing calculator.

267) $f(x) = x^3 - 1.2x^2 + 0.48x - 3$

A) No B) Yes

Answer: B

268) $f(x) = \sqrt[3]{(x - 1)} - \sqrt[3]{(x + 2)}$

A) Yes B) No

Answer: B

Find the inverse of the function.

269) $f(x) = 8x - 5$

A) $f^{-1}(x) = \frac{x}{8} + 5$ B) $f^{-1}(x) = \frac{x + 5}{8}$ C) $f^{-1}(x) = \frac{x - 5}{8}$ D) Not invertible

Answer: B

270) $f(x) = 1 - 4x$

A) $f^{-1}(x) = -\frac{1}{4} - \frac{x}{4}$ B) $f^{-1}(x) = 5 - x$ C) $f^{-1}(x) = \frac{1}{4} - \frac{x}{4}$ D) $f^{-1}(x) = \frac{1}{4} + \frac{x}{4}$

Answer: C

271) $f(x) = \frac{x}{5} - 4$

A) $f^{-1}(x) = x + 9$ B) $f^{-1}(x) = 5x + 4$ C) $f^{-1}(x) = 5x - 20$ D) $f^{-1}(x) = 5x + 20$

Answer: D

272) $f(x) = x^2 - 13, x \geq 0$

A) $f^{-1}(x) = \sqrt{x - 13}$ B) $f^{-1}(x) = x^2 + 13$ C) $f^{-1}(x) = \sqrt{x^2 + 13}$ D) $f^{-1}(x) = \sqrt{x + 13}$

Answer: D

273) $f(x) = x^2 - 9, x \leq 0$

A) $f^{-1}(x) = -\sqrt{x + 9}$ B) $f^{-1}(x) = \sqrt{x + 9}$ C) $f^{-1}(x) = x^2 + 9$ D) $f^{-1}(x) = -\sqrt{x^2 + 9}$

Answer: B

274) $f(x) = -x^2 + 4, x \geq 0$

A) $f^{-1}(x) = x^2 + 4$ B) $f^{-1}(x) = \sqrt{4 - x}$ C) $f^{-1}(x) = \sqrt{x + 4}$ D) $f^{-1}(x) = -\sqrt{x^2 + 4}$

Answer: B

275) $f(x) = (x - 19)^2, x \geq 19$

A) $f^{-1}(x) = \sqrt{x + 19}$ B) $f^{-1}(x) = \sqrt{x} + 19$ C) $f^{-1}(x) = x^2 + 19$ D) $f^{-1}(x) = -\sqrt{x^2 + 19}$

Answer: B

Precalculus Functions and Graphs 4th edition Dugopolski Test Bank

276) $f(x) = (x - 17)^2 + 1$, $x \geq 17$

A) $f^{-1}(x) = \sqrt{x + 17} - 1$

B) $f^{-1}(x) = \sqrt{x - 1} + 17$

C) $f^{-1}(x) = \sqrt{x + 1} - 17$

D) $f^{-1}(x) = 1x^2 + 17$

Answer: B

277) $f(x) = (x + 11)^2 - 3$, $x \geq -11$

A) $f^{-1}(x) = 3x^2 + 11$

B) $f^{-1}(x) = \sqrt{x + 11} + 3$

C) $f^{-1}(x) = \sqrt{x + 3} - 11$

D) $f^{-1}(x) = \sqrt{x - 3} + 11$

Answer: C

278) $f(x) = x^4 + 5$, $x \geq 0$

A) $f^{-1}(x) = \sqrt[4]{x - 5}$

B) $f^{-1}(x) = \sqrt[4]{x - 10}$

C) $f^{-1}(x) = \sqrt[4]{x + 5}$

D) Not invertible

Answer: A

279) $f(x) = x^3 - 4$

A) $f^{-1}(x) = \sqrt[3]{x} + 4$

B) $f^{-1}(x) = \sqrt[3]{x - 4}$

C) $f^{-1}(x) = \sqrt[3]{x + 4}$

D) Not invertible

Answer: C

280) $f(x) = 3x^3 - 6$

A) $f^{-1}(x) = \sqrt[3]{\frac{x}{3}} + 6$

B) $f^{-1}(x) = \sqrt[3]{\frac{x + 6}{3}}$

C) $f^{-1}(x) = \sqrt[3]{\frac{x - 6}{3}}$

D) Not invertible

Answer: B

281) $f(x) = \sqrt{x + 4}$ for $x \geq -4$

A) $f^{-1}(x) = x^2 - 16$

B) $f^{-1}(x) = -x^2 + 4$

C) $f^{-1}(x) = x^2 - 4$

D) Not invertible

Answer: C

282) $f(x) = \sqrt{x} - 6$ for $x \geq 0$

A) $f^{-1}(x) = x + 6$

B) $f^{-1}(x) = -(x + 6)^2$

C) $f^{-1}(x) = (x - 6)^2$

D) $f^{-1}(x) = (x + 6)^2$

Answer: D

283) $f(x) = \sqrt{x - 5}$ for $x \geq 5$

A) $f^{-1}(x) = x + 5$

B) $f^{-1}(x) = x^2 + 5$

C) $f^{-1}(x) = x^2 - 5$

D) Not invertible

Answer: B

284) $f(x) = \frac{6}{x + 9}$

A) $f^{-1}(x) = \frac{x}{9 + 6x}$

B) $f^{-1}(x) = \frac{-9x + 6}{x}$

C) $f^{-1}(x) = \frac{9 + 6x}{x}$

D) Not invertible

Answer: B

Precalculus Functions and Graphs 4th edition Dugopolski Test Bank

285) $f(x) = \frac{-7x - 4}{-5x - 3}$

A) $f^{-1}(x) = \frac{-7x - 4}{-5x - 3}$ B) $f^{-1}(x) = \frac{3x - 4}{-5x + 7}$ C) $f^{-1}(x) = \frac{-5x + 7}{3x - 4}$ D) Not invertible

Answer: B

286) $f(x) = \sqrt{4x + 3}$

A) $f^{-1}(x) = \frac{x^2}{4} - 3$ for $x \geq 0$ B) $f^{-1}(x) = \frac{x^2 - 3}{4}$ for $x \geq 0$

C) $f^{-1}(x) = \frac{(x - 3)^2}{4}$ for $x \geq 0$ D) $f^{-1}(x) = \frac{2x - 3}{4}$

Answer: B

287) $f(x) = \sqrt[3]{\frac{x}{5}} - 7$

A) $f^{-1}(x) = 5(x^3 + 7)$ B) $f^{-1}(x) = [5(x + 7)]^3$ C) $f^{-1}(x) = 15(x + 7)$ D) $f^{-1}(x) = 5(x + 7)^3$

Answer: D

Decide whether or not the functions are inverses of each other.

288) $f(x) = -\frac{1}{5}x,\ g(x) = -5x$

A) No B) Yes

Answer: B

289) $f(x) = 3x - 2,\ g(x) = \frac{x + 3}{2}$

A) Yes B) No

Answer: B

290) $f(x) = 9x - 9,\ g(x) = \frac{1}{9}x + 1$

A) Yes B) No

Answer: A

291) $f(x) = \frac{2}{x + 3},\ g(x) = \frac{3x + 2}{x}$

A) No B) Yes

Answer: A

292) $f(x) = 4x + 16,\ g(x) = \frac{1}{4}x - 4$

A) No B) Yes

Answer: B

293) $f(x) = \sqrt{2 - x},\ g(x) = 2 - x^2$

A) No B) Yes

Answer: B

Precalculus Functions and Graphs 4th edition Dugopolski Test Bank

294) $f(x) = \sqrt[3]{4x - 5}$, $g(x) = \dfrac{x^3 + 5}{4}$

A) No B) Yes

Answer: B

295)

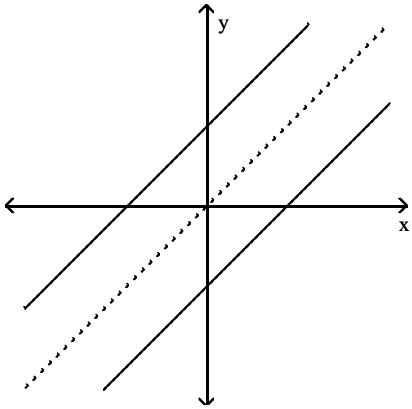

A) Yes B) No

Answer: A

296)

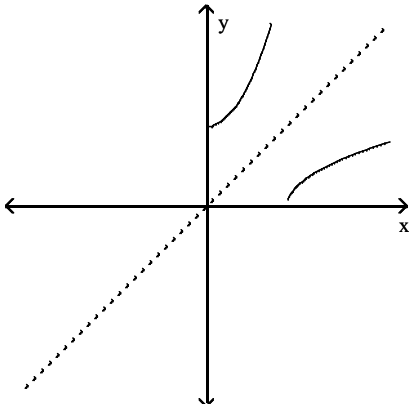

A) No B) Yes

Answer: B

Precalculus Functions and Graphs 4th edition Dugopolski Test Bank

297)

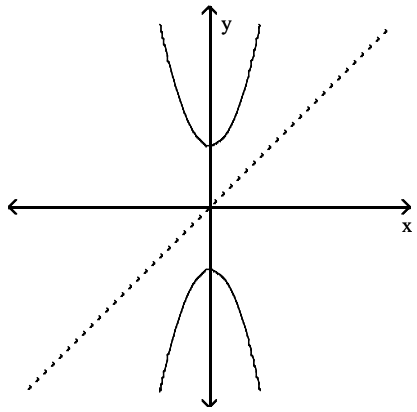

A) No

B) Yes

Answer: A

The graph of a function f is given. On the same axes, sketch the graph of f^{-1}.

298)

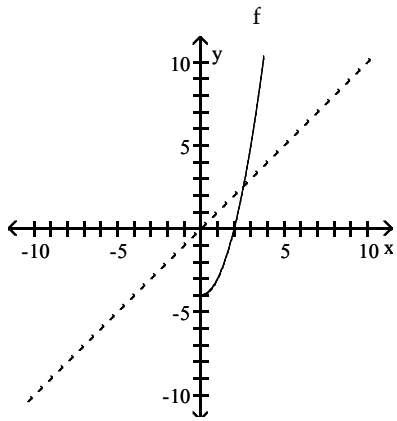

A)

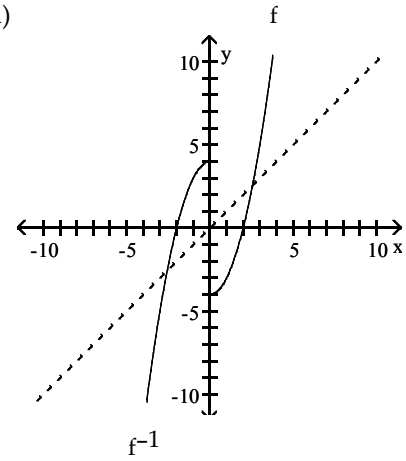

B)

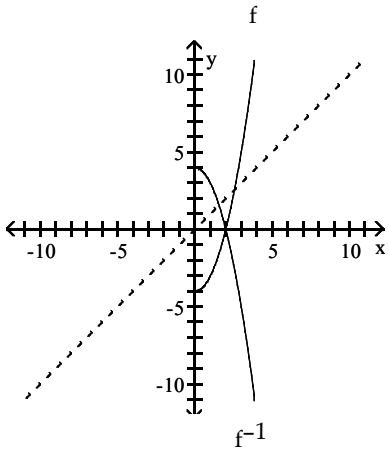

Precalculus Functions and Graphs 4th edition Dugopolski Test Bank

C)

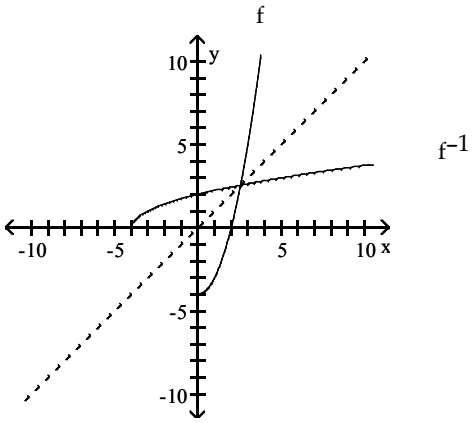

D)

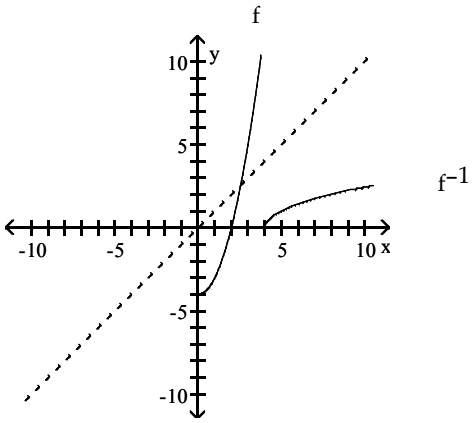

Answer: C

299)

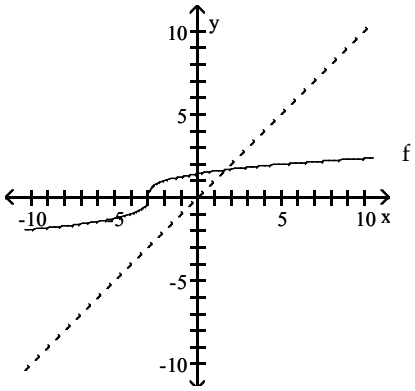

A)

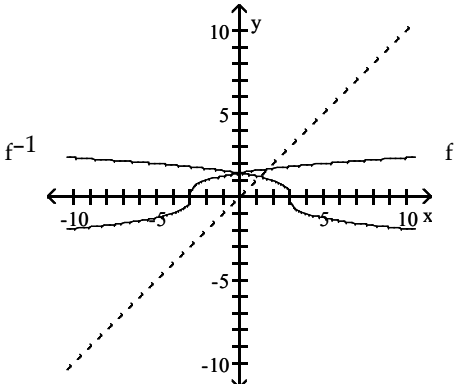

B)

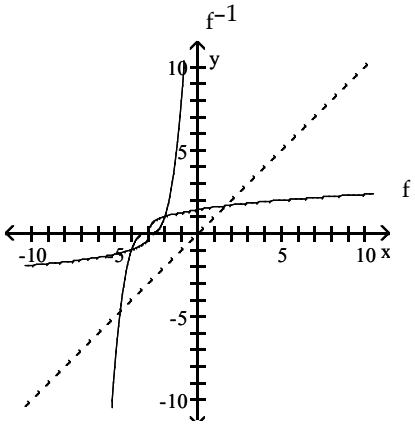

Precalculus Functions and Graphs 4th edition Dugopolski Test Bank

C)

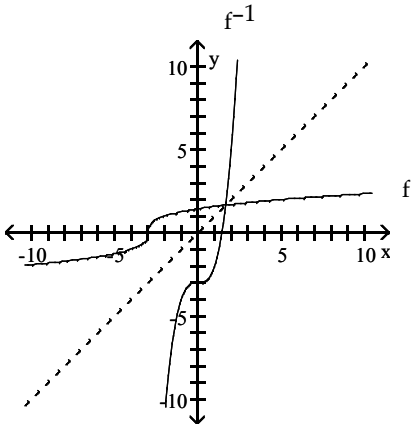

D)

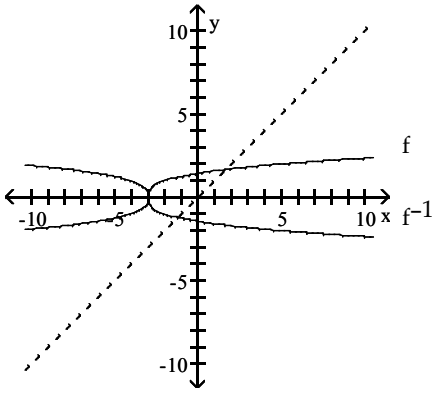

Answer: C

Graph the function as a solid curve and its inverse as a dashed curve.

300) f(x) = 4x

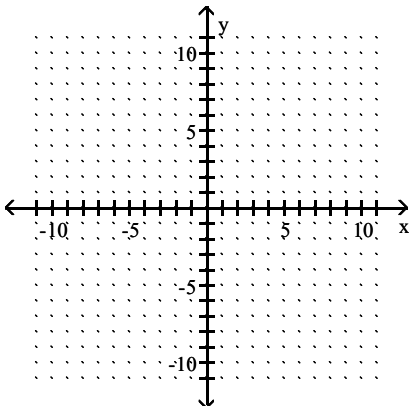

A)

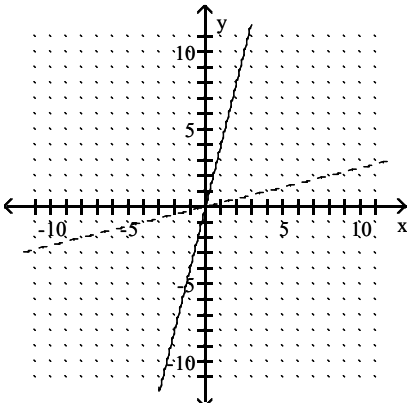

B)

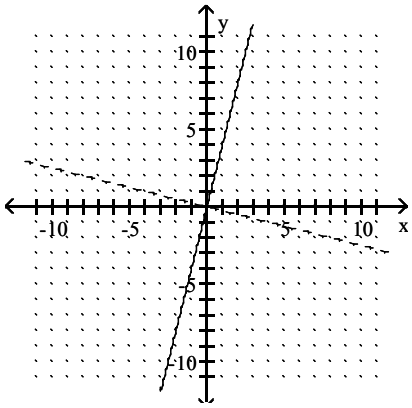

Precalculus Functions and Graphs 4th edition Dugopolski Test Bank

C)

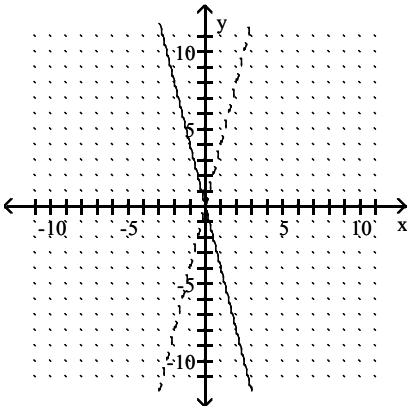

D)

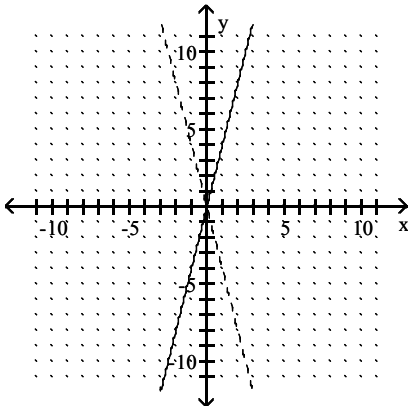

Answer: A

301) $f(x) = 2x + 2$

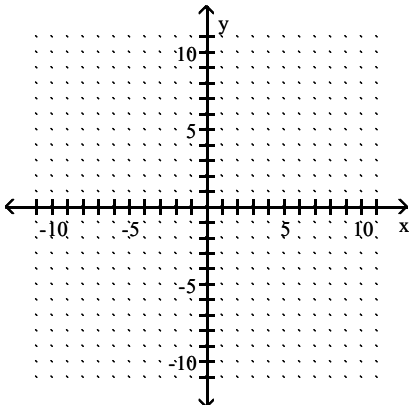

A)

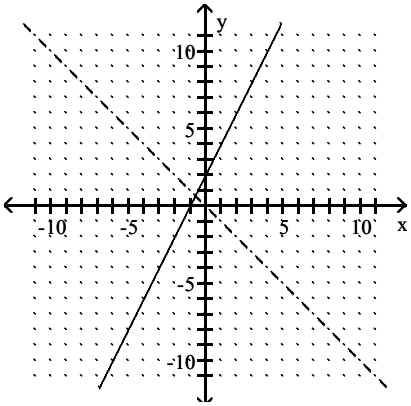

B)

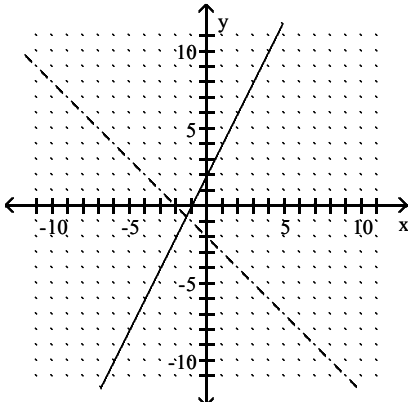

Precalculus Functions and Graphs 4th edition Dugopolski Test Bank

C)

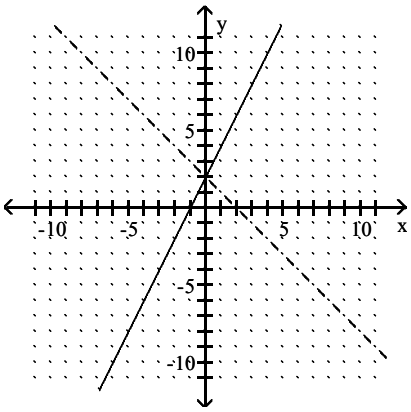

D)

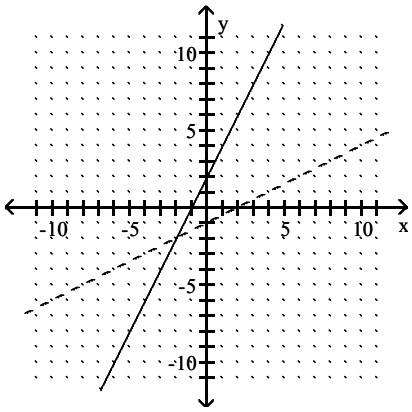

Answer: D

302) $f(x) = \sqrt{x + 2}$

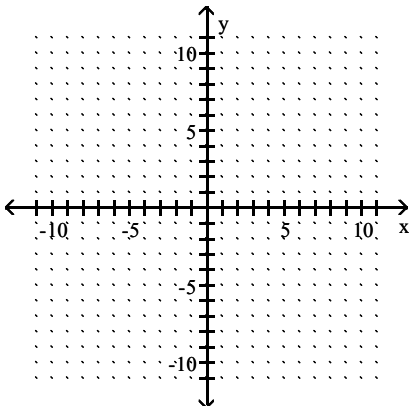

A)

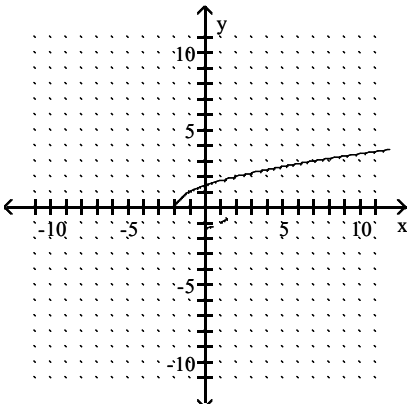

B)

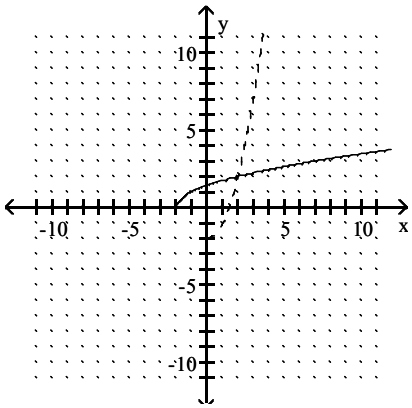

Precalculus Functions and Graphs 4th edition Dugopolski Test Bank

C)

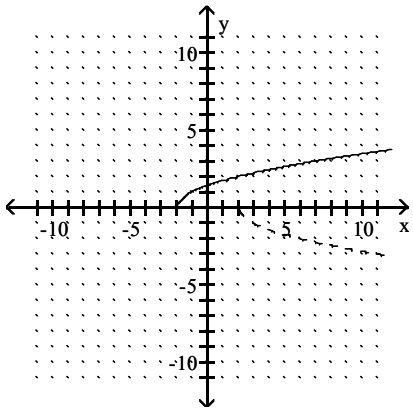

D)

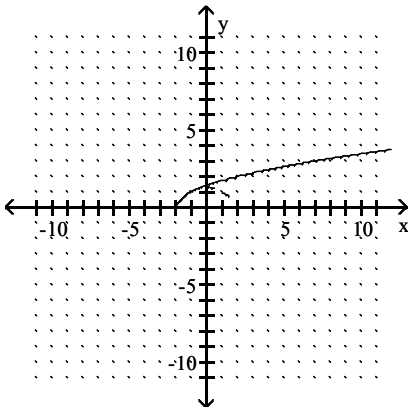

Answer: B

303) $f(x) = x^3 + 4$

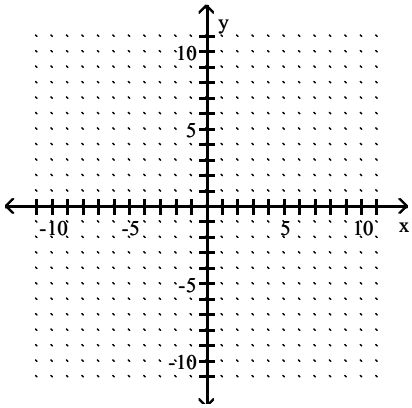

A)

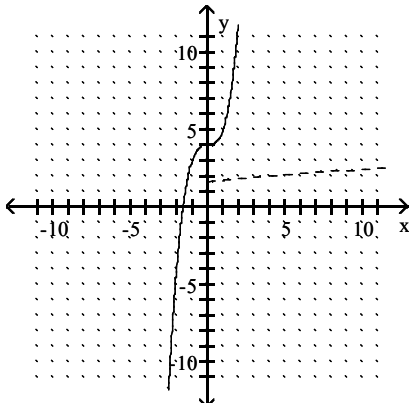

B)

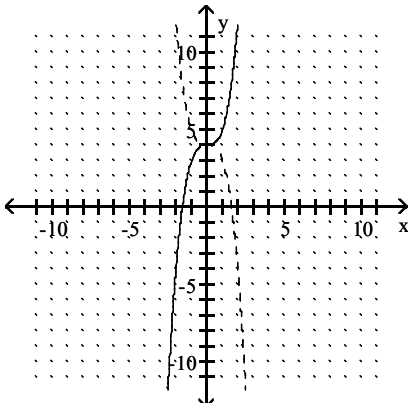

Precalculus Functions and Graphs 4th edition Dugopolski Test Bank

C)

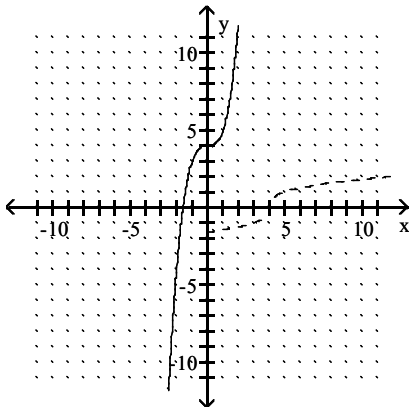

D)

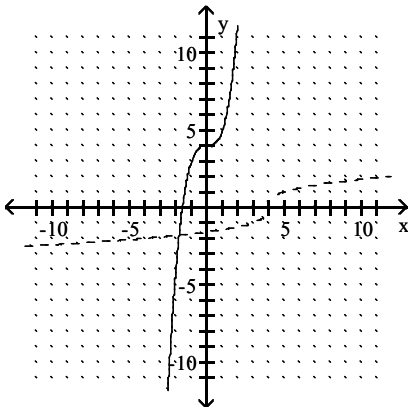

Answer: D

304) $f(x) = 4 - x^2$ for $x \le 0$

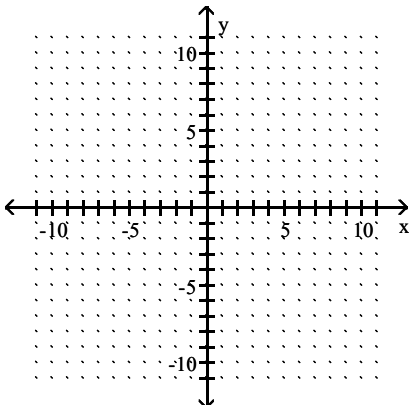

A)

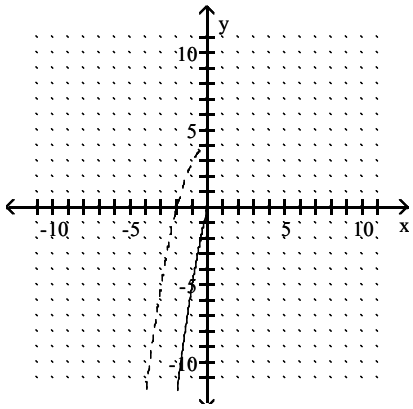

B)

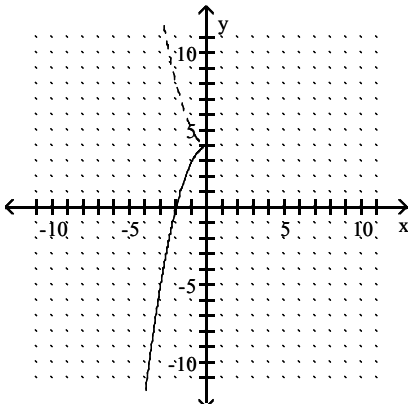

Precalculus Functions and Graphs 4th edition Dugopolski Test Bank

C)

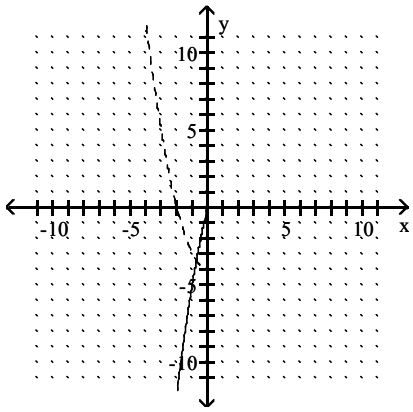

D)

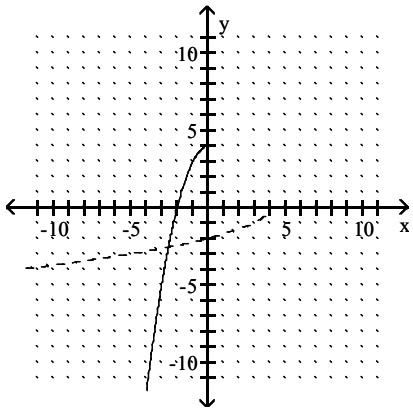

Answer: D

Find a formula for the inverse of the function described below.

305) A size–4 dress in Country C is size 38 in Country D. A function that converts dress sizes in Country C to those in Country D is $f(x) = x + 34$.

A) $f^{-1}(x) = x + 34$ B) $f^{-1}(x) = \frac{x}{34}$ C) $f^{-1}(x) = x - 34$ D) $f^{-1}(x) = \frac{x}{-34}$

Answer: C

306) A size–12 dress in Country C is size 64 in Country D. A function that converts dress sizes in Country C to those in Country D is $f(x) = 2(x + 20)$.

A) $f^{-1}(x) = \frac{x - 20}{2}$ B) $f^{-1}(x) = \frac{x}{2} + 20$ C) $f^{-1}(x) = x - 20$ D) $f^{-1}(x) = \frac{x}{2} - 20$

Answer: D

307) A size–46 dress in Country C is size 3 in Country D. A function that converts dress sizes in Country C to those in Country D is $f(x) = \frac{x}{2} - 20$

A) $f^{-1}(x) = 2(x - 20)$ B) $f^{-1}(x) = x + 20$ C) $f^{-1}(x) = 2(x + 20)$ D) $f^{-1}(x) = 2x + 20$

Answer: C

308) 32° Fahrenheit = 0° Celsius. A function that converts temperatures in Celsius to those in Fahrenheit is $f(x) = \frac{9}{5}x + 32$.

A) $f^{-1}(x) = \frac{5}{9}(x - 32)$ B) $f^{-1}(x) = \frac{9}{5}x + 32$ C) $f^{-1}(x) = x + 32$ D) $f^{-1}(x) = \frac{5}{9}(x + 32)$

Answer: A

309) An organization determines that the cost per person of chartering a bus is given by the formula

$$C(x) = \frac{300 + 7x}{x},$$

where x is the number of people in the group, and C(x) is in dollars.

A) $C^{-1}(x) = \frac{300}{x - 7}$ B) $C^{-1}(x) = \frac{7}{x - 300}$ C) $C^{-1}(x) = \frac{300}{x + 7}$ D) $C^{-1}(x) = \frac{300 + x}{7}$

Answer: A

Precalculus Functions and Graphs 4th edition Dugopolski Test Bank

Write a formula to express the relationship. Use k as the constant of variation.

310) The perimeter P of an equilateral triangle varies directly as the side s.

A) $P = 3s$ B) $P = 3s^2$ C) $P = ks$ D) $P = \frac{s}{3}$

Answer: C

311) The area of an equilateral triangle varies directly as the square of the side s.

A) $A = k^2s$ B) $A = \frac{k}{s^2}$ C) $A = ks^2$ D) $A = \frac{s^2}{k}$

Answer: C

312) The height h of a triangle with a fixed area varies inversely as the base b.

A) $h = kb$ B) $h = \frac{b}{k}$ C) $b = kh$ D) $h = \frac{k}{b}$

Answer: D

313) John kept track of the time it took him to drive to college from his home and the speed at which he drove. He found that the time t varies inversely as the speed r.

A) $t = kr$ B) $t = \frac{r}{k}$ C) $t = \frac{k}{r}$ D) $r = kt$

Answer: C

314) The height h of a cone with a fixed volume varies inversely as the square of its radius r.

A) $r^2 = kh$ B) $h = \frac{r^2}{k}$ C) $h = kr^2$ D) $h = \frac{k}{r^2}$

Answer: D

315) The surface area of a sphere S varies directly as the square of its radius r.

A) $S = \frac{r^2}{k}$ B) $S = k^2r$ C) $S = kr^2$ D) $S = \frac{k}{r^2}$

Answer: C

316) The altitude h of an equilateral triangle varies directly as one side s.

A) $h = \frac{k}{s}$ B) $h = ks$ C) $h = \frac{s}{k}$ D) $h = ks^2$

Answer: B

317) The cost c of a turkey varies directly as its weight w.

A) $c = \frac{w}{k}$ B) $c = kw^2$ C) $c = \frac{k}{w}$ D) $c = kw$

Answer: D

318) The area of a triangle varies jointly as the base and the height.

A) $A = \frac{kb}{h}$ B) $A = bh$ C) $A = k(b + h)$ D) $A = kbh$

Answer: D

Precalculus Functions and Graphs 4th edition Dugopolski Test Bank

319) The force of attraction between an object of fixed mass and a second object of mass m varies directly as m and inversely as the square of the distance d between the two objects.

A) $F = \frac{km}{d^2}$ B) $F = \frac{km}{d}$ C) $F = kmd^2$ D) $F = \frac{k}{md^2}$

Answer: A

SHORT ANSWER. Write the word or phrase that best completes each statement or answers the question.

Translate the given formula to English.

320) $C = 2\pi r$, where C is the circumference of a circle of radius r

Answer: The circumference of a circle varies directly as the radius.

321) $A = (\frac{1}{2})bh$, where A is the area of a triangle with given base and height

Answer: The area of a triangle varies jointly as the height and base.

322) $P = nb$, where P is the perimeter of a regular polygon with n sides each of length b.

Answer: The perimeter of a regular polygon varies jointly as the side length and number of sides.

323) $f = \frac{m^2v}{r}$, where f is the centripetal force of an object of mass m moving along a circle of radius r at velocity v

Answer: The centripetal force of an object varies jointly as mass squared and velocity and inversely as the radius of the circle it moves along.

324) $r = \frac{d}{t}$, where r is the rate by which distance d is covered in time t

Answer: Rate varies directly as distance and inversely as time.

325) $P = \frac{NkT}{V}$, where P is the gas pressure of N molecules in a volume V at temperature T

Answer: Pressure varies jointly as temperature and number of molecules and inversely as volume.

326) $I = PRT$, where I is the simple interest on a principal of P dollars at a rate of interest R per year

Answer: Simple interest varies jointly as principal, rate of interest, and time.

327) $\text{f–stop} = \frac{f}{D}$, where f–stop is camera setting with a lens with focal length f and diaphragm opening D

Answer: A camera's f–stop varies directly as the lens focal length and inversely as the diaphragm opening.

328) $F = \frac{km_1m_2}{d^2}$, where F is the force of attraction between two objects with masses m_1 and m_2 respectively and d is the distance between the two objects

Answer: Force of attraction varies jointly as m_1 and m_2 and inversely as the square of d.

Precalculus Functions and Graphs 4th edition Dugopolski Test Bank

MULTIPLE CHOICE. Choose the one alternative that best completes the statement or answers the question.

Find the constant of variation and construct the function that is expressed in each statement.

329) y varies directly as x: $y = 28$, when $x = 7$

A) $y = 28x$ B) $y = 5x$ C) $y = 4x$ D) $y = \frac{196}{x}$

Answer: C

330) y varies directly as x: $y = 39$, when $x = 12$

A) $y = 39x$ B) $y = 0.31x$ C) $y = 3.25x$ D) $y = 3.25y$

Answer: C

331) y varies directly as x: $y = 1$, when $x = 0.8$

A) $y = \frac{0.8}{x}$ B) $y = 1.25x$ C) $y = \frac{1}{1.25}x$ D) $y = 1x$

Answer: B

332) y varies directly as x: $y = 1.4$, when $x = 0.5$

A) $y = 1.4x$ B) $x = 2.8y$ C) $y = 2.8x$ D) $x = 1.4y$

Answer: C

333) y varies inversely as x: $y = 27$, when $x = 3$

A) $y = \frac{30}{x}$ B) $y = 9x$ C) $y = \frac{9}{x}$ D) $y = \frac{81}{x}$

Answer: D

334) y varies inversely as x: $y = 7$, when $x = 16$

A) $y = \frac{0.44}{x}$ B) $y = \frac{112}{x}$ C) $y = 112x$ D) $y = \frac{23}{x}$

Answer: B

335) y varies inversely as x: $y = 0.1$, when $x = 0.2$

A) $y = \frac{0.5}{x}$ B) $y = 0.5x$ C) $y = \frac{0.3}{x}$ D) $y = \frac{0.02}{x}$

Answer: D

336) y varies inversely as x: $y = 5.25$, when $x = 0.52$

A) $y = \frac{2.73}{x}$ B) $y = \frac{3.13}{x}$ C) $y = 10.1x$ D) $y = \frac{10.1}{x}$

Answer: A

337) y varies jointly as x and the square of w: $y = 133.77$, when $x = 3.9$ and $w = 3.5$.

A) $y = 9.8xw$ B) $y = 2.513x^2w$ C) $y = 9.8xw^2$ D) $y = 2.8xw^2$

Answer: D

Precalculus Functions and Graphs 4th edition Dugopolski Test Bank

338) y varies directly as the square root of x and inversely as w: $y = -30.16$, when $x = 33.64$ and $w = -0.5$.

A) $y = \frac{87.464}{w\sqrt{x}}$ B) $y = \frac{2.6\sqrt{x}}{w}$ C) $y = \frac{15.08\sqrt{x}}{w}$ D) $y = 10.4\sqrt{x}\,w$

Answer: B

Solve the problem.

339) If m varies directly as p, and $m = 48$ when $p = 8$, find m when p is 7.

A) $m = 49$ B) $m = 64$ C) $m = 36$ D) $m = 42$

Answer: D

340) If y varies inversely as x, and $y = \frac{9}{5}$ when $x = \frac{1}{3}$, find y when $x = \frac{1}{6}$.

A) $y = \frac{9}{10}$ B) $y = \frac{1}{10}$ C) $y = \frac{3}{5}$ D) $y = \frac{18}{5}$

Answer: D

341) If f varies jointly as q^2 and h, and $f = 54$ when $q = 3$ and $h = 3$, find k.

A) $k = 6$ B) $k = 2$ C) $k = 3$ D) $k = 48$

Answer: B

342) If f varies jointly as q^2 and h, and $f = 36$ when $q = 3$ and $h = 2$, find q when $f = 160$ and $h = 5$.

A) $q = 3$ B) $q = 2$ C) $q = 5$ D) $q = 4$

Answer: D

343) If f varies jointly as q^2 and h, and $f = -16$ when $q = 2$ and $h = 2$, find f when $q = 4$ and $h = 5$.

A) $f = -40$ B) $f = -10$ C) $f = -160$ D) $f = -32$

Answer: C

344) If f varies jointly as q^2 and h, and $f = -96$ when $q = 4$ and $h = -3$, find k.

A) $k = 3$ B) $k = 2$ C) $k = 4$ D) $k = -3$

Answer: B

345) If f varies jointly as q^2 and h, and $f = 96$ when $q = 4$ and $h = 2$, find f when $q = 2$ and $h = 6$.

A) $f = 36$ B) $f = 12$ C) $f = 72$ D) $f = 18$

Answer: C

346) If s varies directly as t^2, and $s = 80$ when $t = 4$, find s when t is 6.

A) $s = 180$ B) $s = 20$ C) $s = 24$ D) $s = 120$

Answer: A

347) If x varies inversely as y^2, and $x = 2$ when $y = 18$, find x when $y = 6$.

A) $x = 12$ B) $x = 3$ C) $x = 72$ D) $x = 18$

Answer: D

348) If y varies directly as x and inversely as the square root of w, and $y = 72$ when $x = 8$ and $w = 12$, find y when $x = 5$ and $w = 27$.

A) $y = 60$ B) $y = 90\sqrt{3}$ C) $y = 30$ D) $y = 18\sqrt{3}$

Answer: C

Precalculus Functions and Graphs 4th edition Dugopolski Test Bank

Determine whether the first variable varies directly or inversely with the other variable.

349) The height of a building in inches, the height of the same building in feet

A) Inversely B) Directly

Answer: B

350) The number of hot dogs that you can buy for $75, the price per hot dog

A) Inversely B) Directly

Answer: A

351) The time it takes an athlete to run 100 meters, her average speed

A) Directly B) Inversely

Answer: B

352) The depth of a diver in the ocean, the pressure exerted by the water on the diver.

A) Directly B) Inversely

Answer: A

Solve the problem.

353) The volume V of a given mass of gas varies directly as the temperature T and inversely as the pressure P. If $V = 200.0$ in.^{3} when $T = 300°$ and $P = 15$ lb/in.^{2}, what is the volume when $T = 230°$ and $P = 15$ lb/in.^{2}?

A) 163.3 in.^{3} B) 153.3 in.^{3} C) 133.3 in.^{3} D) 143.3 in.^{3}

Answer: B

354) The intensity I of light varies inversely as the square of the distance D from the source. If the intensity of illumination on a screen 5 ft from a light is 4 foot candles, find the intensity on a screen 20 ft from the light.

A) $\frac{1}{4}$ foot–candle B) $\frac{1}{5}$ foot–candle C) 2 foot–candles D) $1\frac{1}{4}$ foot–candles

Answer: A

355) The weight of a body above the surface of the earth is inversely proportional to the square of its distance from the center of the earth. What is the effect on the weight when the distance is multiplied by 4?

A) The weight is divided by 4. B) The weight is multiplied by 4.

C) The weight is multiplied by 16. D) The weight is divided by 16.

Answer: D

356) The period of vibration P for a pendulum varies directly as the square root of the length L. If the period of vibration is 2 sec when the length is 16 inches, what is the period when $L = 1.5625$ inches?

A) 3 sec B) 2.5 sec C) 0.625 sec D) 2.75 sec

Answer: C

357) The gravitational attraction A between two masses varies inversely as the square of the distance between them. The force of attraction is 2.25 lb when the masses are 4 ft apart, what is the attraction when the masses are 6 ft apart?

A) 4 lb B) 1 lb C) 2 lb D) 3 lb

Answer: B

Precalculus Functions and Graphs 4th edition Dugopolski Test Bank

358) The time T necessary to make an enlargement of a photo negative varies directly as the area A of the enlargement. If 45 seconds are required to make a 3–by–5 enlargement, find the time required for a 4–by–7 enlargement.

A) 56 sec B) 140 sec C) 112 sec D) 84 sec

Answer: D

359) The weight of a liquid varies directly as its volume V. If the weight of the liquid in a cubical container 5 cm on a side is 250 g, find the weight of the liquid in a cubical container 4 cm on a side.

A) 8 g B) 64 g C) 44 g D) 128 g

Answer: D

360) The time T necessary to make an enlargement of a photo negative varies directly as the area A of the enlargement. If 24 seconds are required to make a 3–by–4 enlargement, find the time required for a 6–by–6 enlargement.

A) 36 sec B) 72 sec C) 108 sec D) 144 sec

Answer: B

361) The shadow cast by an object on a sunny day varies directly as the height of the object. If a person 58 inches tall casts a shadow 84 inches long, how tall is a tree which casts a shadow 44 feet in length? Round to the nearest hundredth when necessary.

A) 63.72 feet B) 71 feet C) 30.38 feet D) 110.73 feet

Answer: C

Provide an appropriate response.

362) Which of the following is a horizontal translation and a reflection of the function $y = [[x]]$ about the x–axis? Use your graphics calculator to verify your result.

A) $y = -[[x]]$ B) $y = -[[x]] + 1$ C) $y = -[[x + 1]]$ D) $y = [[x + 1]]$

Answer: C

363) Give the equation that describes the graph shown.

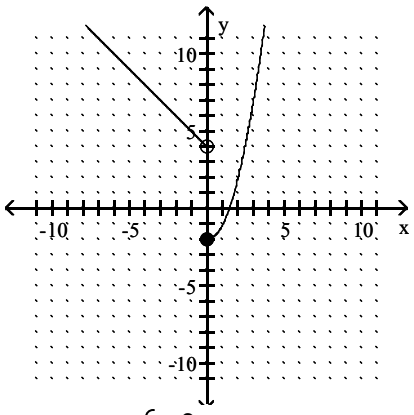

A) $f(x) = \begin{cases} x^2 - 2 & \text{for } x \geq 0 \\ -x + 4 & \text{for } x < 0 \end{cases}$

B) $f(x) = \begin{cases} \sqrt{x} & \text{for } x \geq 0 \\ x^2 & \text{for } x < 0 \end{cases}$

C) $f(x) = \begin{cases} x - 2 & \text{for } x \geq -1 \\ -x^2 & \text{for } x < -1 \end{cases}$

D) $f(x) = \begin{cases} -2 & \text{for } x \geq 0 \\ 2 & \text{for } x < 0 \end{cases}$

Answer: A

Precalculus Functions and Graphs 4th edition Dugopolski Test Bank

364) True or false? In order to graph $y = |f(x)|$, the graph is the same as that of $y = f(x)$ for values of $f(x)$ that are negative, and for nonnegative values of $y = f(x)$, the graph is reflected across the x–axis.

A) True B) False

Answer: B

365) One of the graphs is that of $y = f(x)$ and the other is that of $y = |f(x)|$. State which is the graph of $y = |f(x)|$.

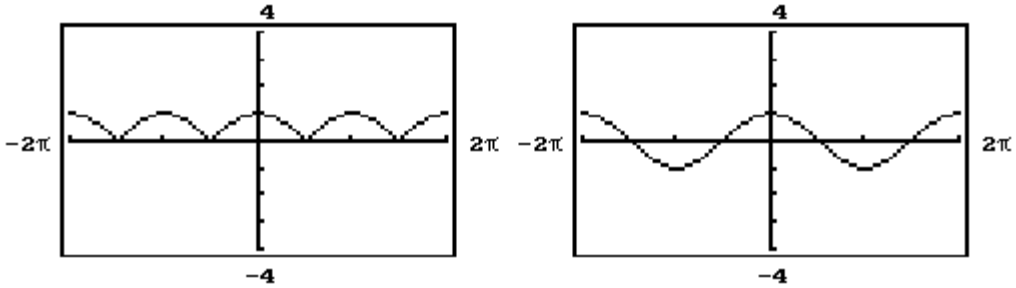

i ii

A) i B) ii

Answer: A

366) Which function represents a vertical translation of the parabola $y = (x - 5)^2 + 2$?

A) $y = (x - 5)^2 + 7$ B) $y = -(x - 5)^2 + 2$ C) $y = x^2 + 2$ D) $y = (x + 5)^2 + 2$

Answer: A

367) The graph shown is a translation of the function $y = |x|$. The graph shown is of the form $y = |x - h| + k$. What are the values of h and k?

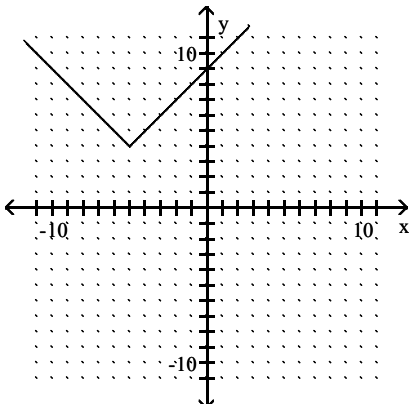

A) $h = -5$, $k = -4$ B) $h = 5$, $k = 4$ C) $h = -5$, $k = 4$ D) $h = 5$ $k = -4$

Answer: C

SHORT ANSWER. Write the word or phrase that best completes each statement or answers the question.

368) Is $f(x + h)$ the same as $f(x) + f(h)$? Explain and give an example.

Answer: No. Explanations will vary

369) Explain in your own words why $g(x + h)$ is not the same as $g(x) + h$.

Answer: In $g(x) + h$, h is added to the original function. In $g(x + h)$, $x + h$ is substituted for x in the original function.

Precalculus Functions and Graphs 4th edition Dugopolski Test Bank

MULTIPLE CHOICE. Choose the one alternative that best completes the statement or answers the question.

370) True or false? If f is a one–to–one function and the graph of f lies completely within the first quadrant, then the graph of f^{-1} lies completely within the first quadrant.

A) True B) False

Answer: A

371) True or false? If f is a one–to–one function and the graph of f lies completely within the first and second quadrants, then the graph of f^{-1} lies completely within the first and third quadrants.

A) True B) False

Answer: B

Precalculus Functions and Graphs 4th edition Dugopolski Test Bank