Trigonometry 5th edition Dugopolski Test Bank

SKU: 9780135207338-TEST-BANK

Trigonometry 5th edition Dugopolski Test Bank

MULTIPLE CHOICE. Choose the one alternative that best completes the statement or answers the question.

Write the ordered pair for each point shown in the xy–plane.

1)

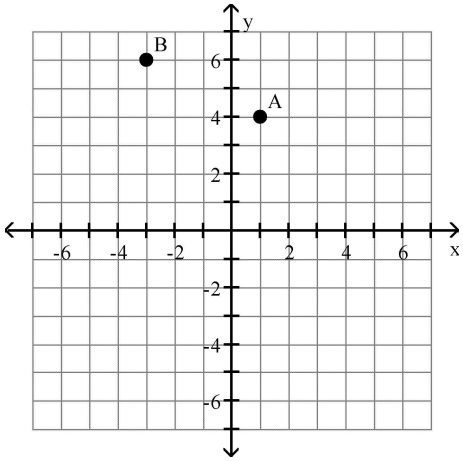

A) A(1, 6), B(4, 6) B) A(1, 4), B(–3, 6) C) A(1, 4), B(6, –3) D) A(4, 18), B(6, –3)

Answer: B

2)

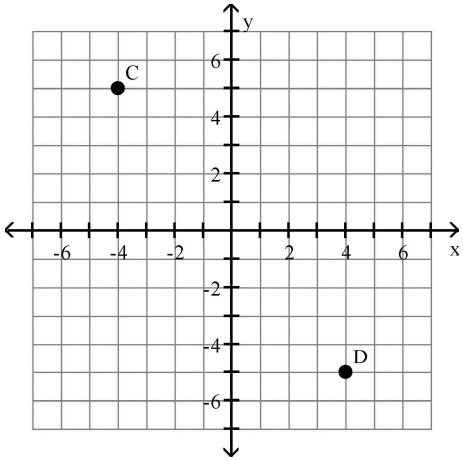

A) C(–4, 5), D(–5, 4) B) C(–4, 5), D(4, –5) C) C(–4, –5), D(5, –5) D) C(5, 8), D(–5, 4)

Answer: B

Trigonometry 5th edition Dugopolski Test Bank

3)

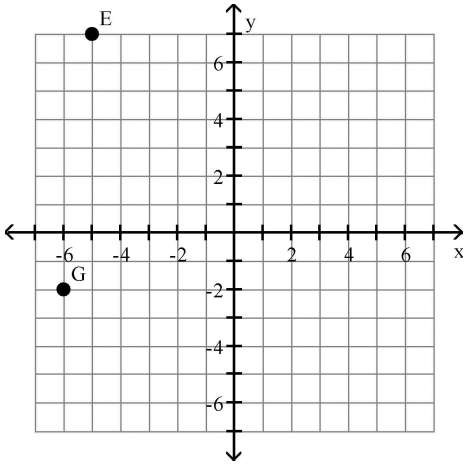

A) E(–5, –2), G(7, –2) B) E(–5, 7), G(–2, –6) C) E(7, 6), G(–2, –6) D) E(–5, 7), G(–6, –2)

Answer: D

4)

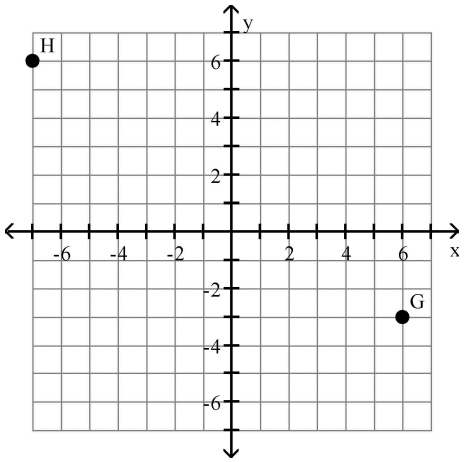

A) G(–3, 28), H(6, –7) B) G(6, –3), H(–7, 6) C) G(6, 6), H(–3, 6) D) G(6, –3), H(6, –7)

Answer: B

Name the quadrant in which the point is located, or the axis on which it lies .

5) (9, 4)

A) Quadrant I B) Quadrant II C) Quadrant III D) Quadrant IV

Answer: A

6) (–17, 12)

A) Quadrant I B) Quadrant II C) Quadrant III D) Quadrant IV

Answer: B

7) (–19, –20)

A) Quadrant I B) Quadrant II C) Quadrant III D) Quadrant IV

Answer: C

8) (20, –4)

A) Quadrant III B) Quadrant I C) Quadrant II D) Quadrant IV

Answer: D

Trigonometry 5th edition Dugopolski Test Bank

9) (–20, 0)

A) Quadrant III B) y–axis C) Quadrant II D) x–axis

Answer: D

10) (0, –12)

A) x–axis B) Quadrant II C) Quadrant III D) y–axis

Answer: D

Find the length of the missing side in the right triangle.

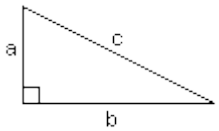

11) a = 12, b = 16; find c

A) 20 B) 112 C) 400 D) $4\sqrt{7}$

Answer: A

12) a = 16, c = 34; find b

A) 30 B) $2\sqrt{353}$ C) 1,412 D) 1,156

Answer: A

13) $a = \sqrt{6}$, $b = \sqrt{7}$; find c

A) $\sqrt{85}$ B) $\sqrt{13}$ C) 85 D) 13

Answer: B

Simplify.

14) $\sqrt{18}$

A) $2\sqrt{3}$ B) 4 C) 6 D) $3\sqrt{2}$

Answer: D

15) $\sqrt{\frac{16}{11}}$

A) $\frac{16\sqrt{11}}{11}$ B) $\frac{4\sqrt{11}}{11}$ C) 125 D) $4\sqrt{11}$

Answer: B

16) $\sqrt{\frac{121}{7}}$

A) 60 B) $11\sqrt{7}$ C) $\frac{121\sqrt{7}}{7}$ D) $\frac{11\sqrt{7}}{7}$

Answer: D

17) $\frac{3}{\sqrt{22}}$

A) $\frac{3\sqrt{22}}{22}$ B) $\frac{9\sqrt{22}}{22}$ C) $3\sqrt{22}$ D) 487

Answer: A

Trigonometry 5th edition Dugopolski Test Bank

18) $\frac{2}{\sqrt{5}}$

A) 27 B) $\frac{4\sqrt{5}}{5}$ C) $\frac{2\sqrt{5}}{5}$ D) $2\sqrt{5}$

Answer: C

Find the distance between the points, and find the midpoint of the line segment joining them.

19) (7, 2) and (4, 8)

A) 3; (3, –6) B) $3\sqrt{5}; \left(\frac{11}{2}, 5\right)$ C) 3; (11, 10) D) $3\sqrt{5}; \left(5, \frac{11}{2}\right)$

Answer: B

20) (–1, –9) and (–3, 3)

A) 10; (–4, –6) B) $2\sqrt{37}; (-2, -3)$ C) 10; (2, –12) D) $2\sqrt{37}; (-3, -2)$

Answer: B

21) (7y, 1) and (8y, 5)

A) y + 4; (y, 4) B) $\sqrt{y^2 + 16}; \left(3y, \frac{15}{2}\right)$ C) $\sqrt{y^2 + 16}; \left(\frac{15}{2}y, 3\right)$ D) y + 4; (15y, 6)

Answer: C

Find the center and radius of the circle.

22) $x^2 + y^2 = 64$

A) Center: (1, 1); radius: 64
B) Center: (0, 0); radius: 8
C) Center: (1, 1); radius: 8
D) Center: (0, 0); radius: 64

Answer: B

23) $(x - 3)^2 + y^2 = 1$

A) Center: (3, 0); radius: 1
B) Center: (0, –3); radius: 1
C) Center: (0, 3); radius: 1
D) Center: (–3, 0); radius: 1

Answer: A

24) $x^2 + (y + 4)^2 = 121$

A) Center: (0, –4); radius: 121
B) Center: (–4, 0); radius: 11
C) Center: (4, 0); radius: 121
D) Center: (0, –4); radius: 11

Answer: D

25) $(x + 8)^2 + (y + 5)^2 = 121$

A) Center: (8, 5); radius: 11
B) Center: (–8, –5); radius: 11
C) Center: (–5, –8); radius: 121
D) Center: (5, 8); radius: 121

Answer: B

26) $(x - 4)^2 + (y + 2)^2 = 9$

A) Center: (–2, 4); radius: 9
B) Center: (4, –2); radius: 9
C) Center: (4, –2); radius: 3
D) Center: (–2, 4); radius: 3

Answer: C

Trigonometry 5th edition Dugopolski Test Bank

27) $(x + 1)^2 + (y - 9)^2 = 81$

A) Center: (–1, 9); radius: 81
B) Center: (9, –1); radius: 81
C) Center: (–1, 9); radius: 9
D) Center: (9, –1); radius: 9

Answer: C

28) $(x - 8)^2 + (y - 3)^2 = 25$

A) Center: (–8, –3); radius: 25
B) Center: (8, 3); radius: 5
C) Center: (3, 8); radius: 5
D) Center: (–3, –8); radius: 5

Answer: B

29) $x^2 + (y - 8)^2 = 49$

A) Center: (–8, 0); radius: 7
B) Center: (8, 0); radius: 7
C) Center: (0 , 8); radius: 49
D) Center: (0, 8); radius: 7

Answer: D

Write the standard equation for the circle.

30) Center at (–9, –8), radius 3

A) $(x - 9)^2 + (y - 8)^2 = 9$
B) $(x - 8)^2 + (y - 9)^2 = 3$
C) $(x + 9)^2 + (y + 8)^2 = 9$
D) $(x + 8)^2 + (y + 9)^2 = 3$

Answer: C

31) Center at (5, 0), radius 9

A) $(x + 5)^2 + y^2 = 81$
B) $(x - 5)^2 + y^2 = 81$
C) $x^2 + (y - 5)^2 = 9$
D) $x^2 + (y + 5)^2 = 9$

Answer: B

32) Center at (–2, 9), radius $\sqrt{3}$

A) $(x - 2)^2 + (y + 9)^2 = 3$
B) $(x - 9)^2 + (y + 2)^2 = 9$
C) $(x + 9)^2 + (y - 2)^2 = 9$
D) $(x + 2)^2 + (y - 9)^2 = 3$

Answer: D

33) Center at $\left(\frac{10}{9}, 2\right)$, radius $\frac{8}{11}$

A) $\left(x - \frac{10}{9}\right)^2 + (y - 2)^2 = \frac{64}{121}$
B) $(x - 2)^2 + \left(y - \frac{10}{9}\right)^2 = \frac{8}{11}$
C) $\left(x + \frac{10}{9}\right)^2 + (y + 2)^2 = \frac{64}{121}$
D) $(x + 2)^2 + \left(y + \frac{10}{9}\right)^2 = \frac{8}{11}$

Answer: A

34) Center at (10, 9), passing through (13, 13)

A) $(x + 10)^2 + (y + 9)^2 = 25$
B) $(x - 9)^2 + (y - 10)^2 = 9$
C) $(x - 10)^2 + (y - 9)^2 = 25$
D) $(x + 9)^2 + (y + 10)^2 = 9$

Answer: C

Trigonometry 5th edition Dugopolski Test Bank

35) Center at (22, 12), passing through the origin

A) $(x - 22)^2 + (y - 12)^2 = 25$

B) $(x - 12)^2 + (y - 22)^2 = 628$

C) $(x - 12)^2 + (y - 22)^2 = 25$

D) $(x - 22)^2 + (y - 12)^2 = 628$

Answer: D

36) Center at (16, 3), passing through (0, 3)

A) $(x - 3)^2 + (y - 16)^2 = 16$

B) $(x - 16)^2 + (y - 3)^2 = 16$

C) $(x - 16)^2 + (y - 3)^2 = 256$

D) $(x - 3)^2 + (y - 16)^2 = 256$

Answer: C

37) Center at (14, 1), passing through (14, 0)

A) $(x - 14)^2 + (y - 1)^2 = 196$

B) $(x - 1)^2 + (y - 14)^2 = 196$

C) $(x - 14)^2 + (y - 1)^2 = 1$

D) $(x - 1)^2 + (y - 14)^2 = 1$

Answer: C

Write the standard equation for the following circle.

38)

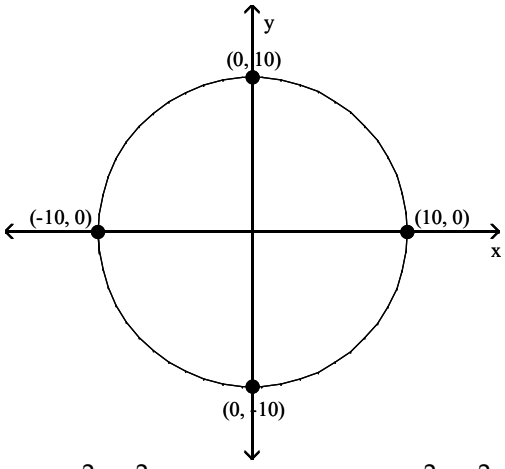

A) $x^2 - y^2 = 100$

B) $x^2 - y^2 = 10$

C) $x^2 + y^2 = 10$

D) $x^2 + y^2 = 100$

Answer: D

Trigonometry 5th edition Dugopolski Test Bank

39)

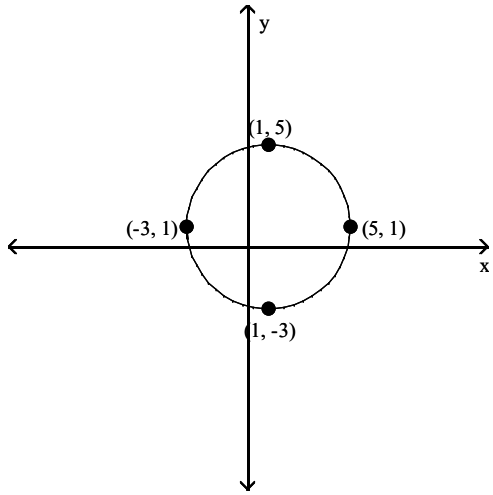

A) $(x + 1)^2 + (y + 1)^2 = 4$

B) $(x - 1)^2 + (y - 1)^2 = 16$

C) $(x + 1)^2 + (y + 1)^2 = 16$

D) $(x - 1)^2 + (y - 1)^2 = 4$

Answer: B

40)

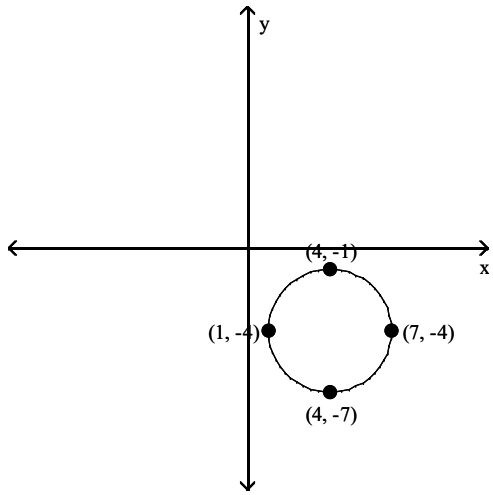

A) $(x - 4)^2 + (y + 4)^2 = 3$

B) $(x + 4)^2 + (y - 4)^2 = 9$

C) $(x + 4)^2 + (y - 4)^2 = 3$

D) $(x - 4)^2 + (y + 4)^2 = 9$

Answer: D

Trigonometry 5th edition Dugopolski Test Bank

41)

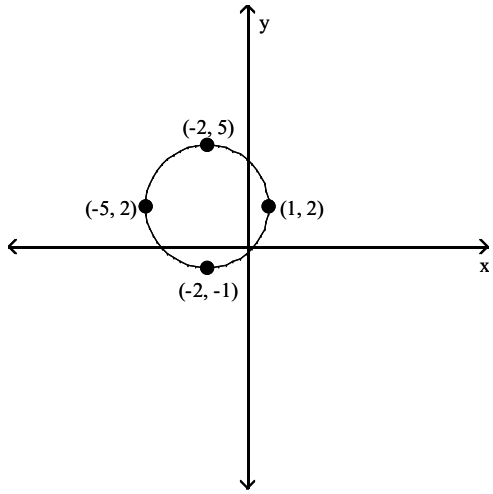

A) $(x + 2)^2 + (y - 2)^2 = 9$

B) $(x + 2)^2 + (y - 2)^2 = 3$

C) $(x - 2)^2 + (y + 2)^2 = 3$

D) $(x - 2)^2 + (y + 2)^2 = 9$

Answer: A

42)

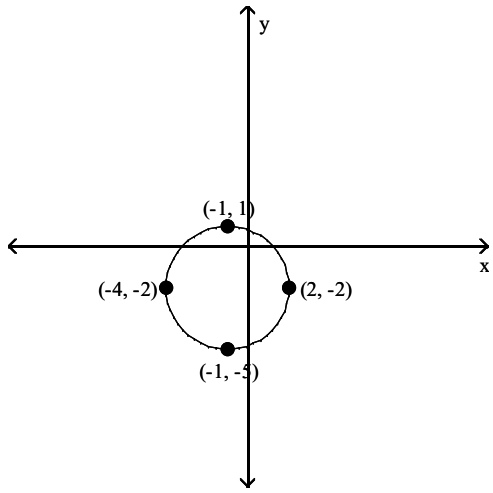

A) $(x - 1)^2 + (y - 2)^2 = 9$

B) $(x - 1)^2 + (y - 2)^2 = 3$

C) $(x + 1)^2 + (y + 2)^2 = 9$

D) $(x + 1)^2 + (y + 2)^2 = 3$

Answer: C

Trigonometry 5th edition Dugopolski Test Bank

43)

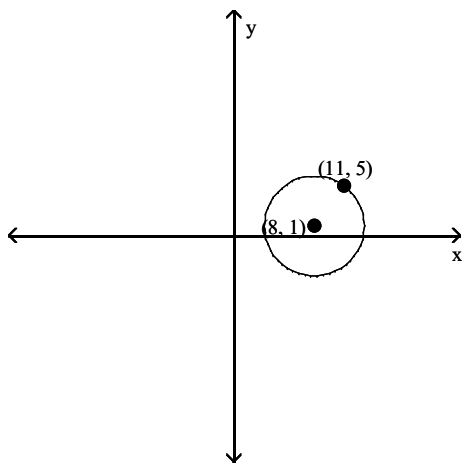

A) $(x - 1)^2 + (y - 8)^2 = 9$

B) $(x - 8)^2 + (y - 1)^2 = 25$

C) $(x + 1)^2 + (y + 8)^2 = 9$

D) $(x + 8)^2 + (y + 1)^2 = 25$

Answer: B

Find all numbers a such that the given point is on the circle $x^2 + y^2 = 1$.

44) $\left(\frac{2}{3}, a\right)$

A) $a = \pm\frac{1}{3}$

B) $a = \pm\frac{\sqrt{5}}{3}$

C) $a = \pm\frac{\sqrt{3}}{2}$

D) $a = \pm\frac{1}{2}$

Answer: B

45) $\left(-\frac{\sqrt{2}}{2}, a\right)$

A) $a = \pm\frac{1}{2}$

B) $a = \pm\frac{\sqrt{2}}{2}$

C) $a = \pm\frac{\sqrt{5}}{2}$

D) $a = \pm\frac{\sqrt{3}}{2}$

Answer: B

46) $\left(a, \frac{8}{9}\right)$

A) $a = \pm\frac{\sqrt{17}}{9}$

B) $a = \pm\frac{9}{8}$

C) $a = \pm\frac{\sqrt{17}}{8}$

D) $a = \pm\sqrt{17}$

Answer: A

47) $\left(a, \frac{\sqrt{3}}{2}\right)$

A) $a = \pm\frac{\sqrt{3}}{2}$

B) $a = 0$

C) $a = \pm\frac{\sqrt{2}}{2}$

D) $a = \pm\frac{1}{2}$

Answer: D

Trigonometry 5th edition Dugopolski Test Bank

48) $\left(a, \frac{3}{7}\right)$

A) $a = \pm\frac{3}{7}$ B) $a = \pm\frac{4}{7}$ C) $a = \pm\frac{\sqrt{3}}{2}$ D) $a = \pm\frac{2\sqrt{10}}{7}$

Answer: D

Find the x– and y–intercepts for the equation. Then graph the equation.

49) $6y - 3x = -9$

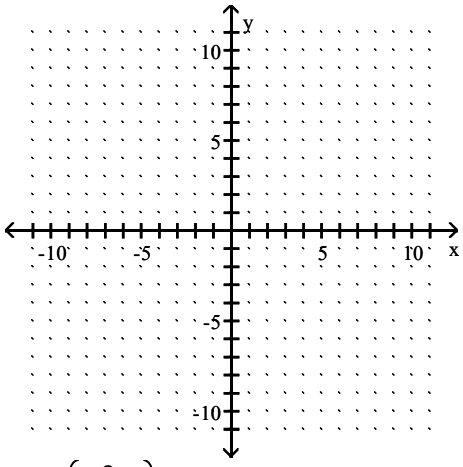

A) $\left(-\frac{3}{2}, 0\right)$, $(0, -3)$

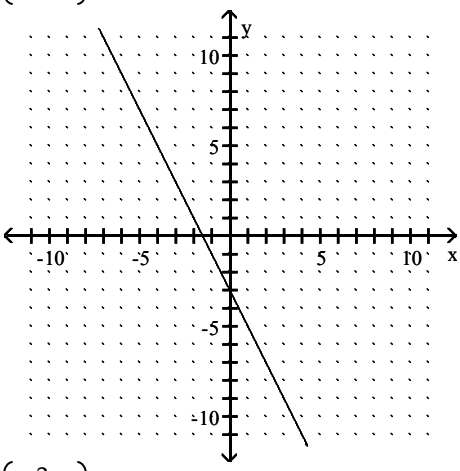

B) $(3, 0)$, $\left(0, -\frac{3}{2}\right)$

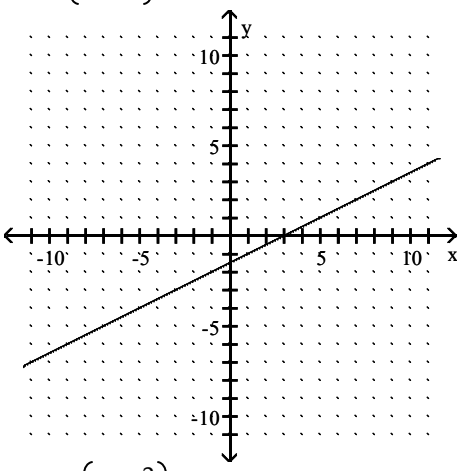

C) $\left(-\frac{3}{2}, 0\right)$, $(0, 3)$

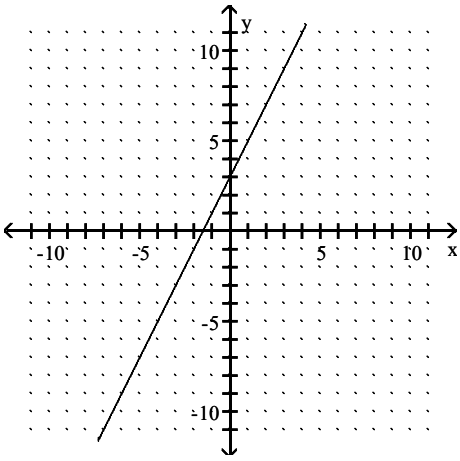

D) $(-3, 0)$, $\left(0, -\frac{3}{2}\right)$

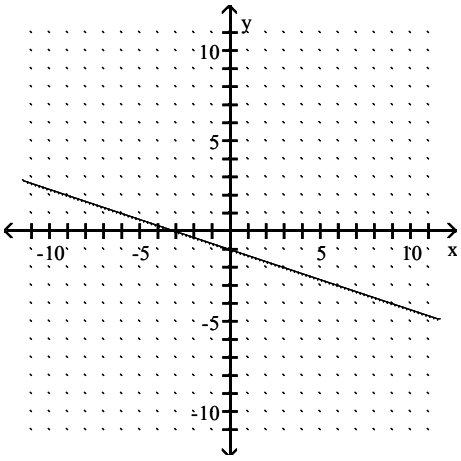

Trigonometry 5th edition Dugopolski Test Bank

Answer: B

50) $-3x - 6y = 6$

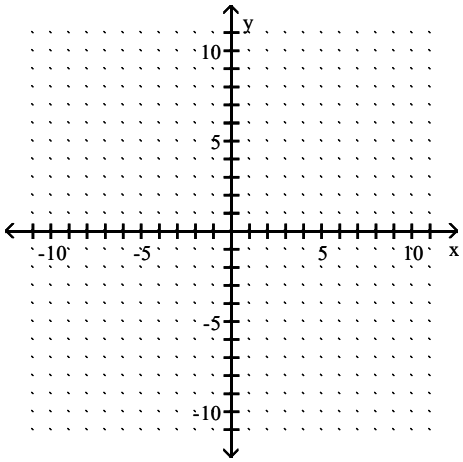

A) (−2, 0), (0, −1)

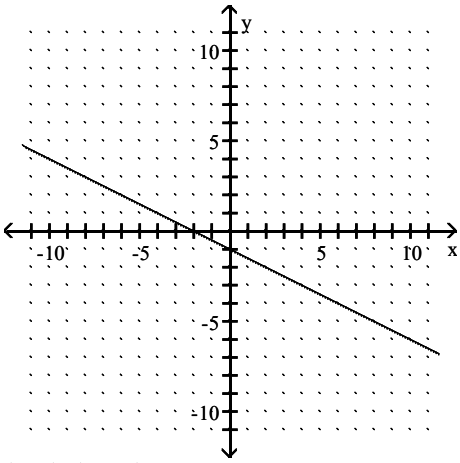

B) (−1, 0), (0, 2)

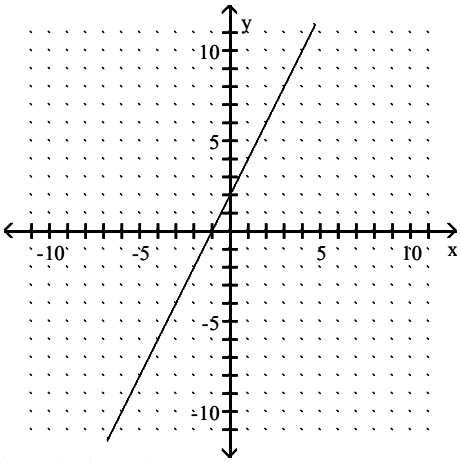

C) (2, 0), (0, −1)

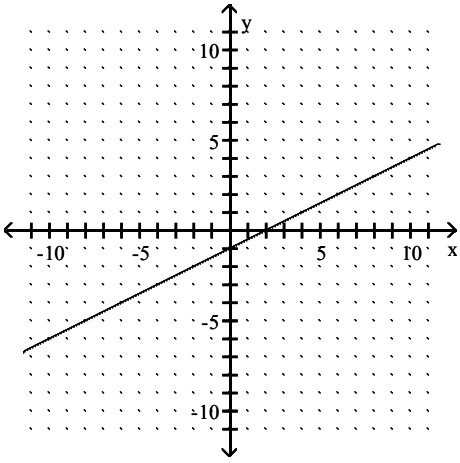

D) (−1, 0), (0, −2)

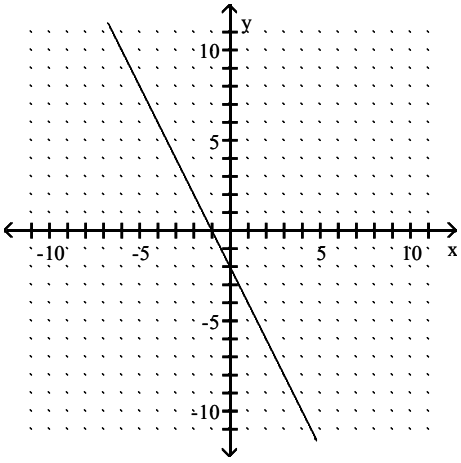

Answer: A

Trigonometry 5th edition Dugopolski Test Bank

51) $4x - 8y = 8$

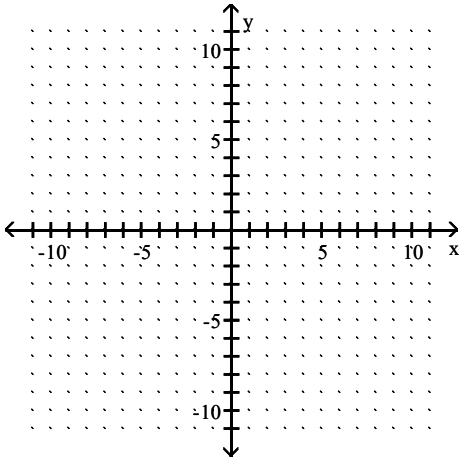

A) (–2, 0), (0, 1)

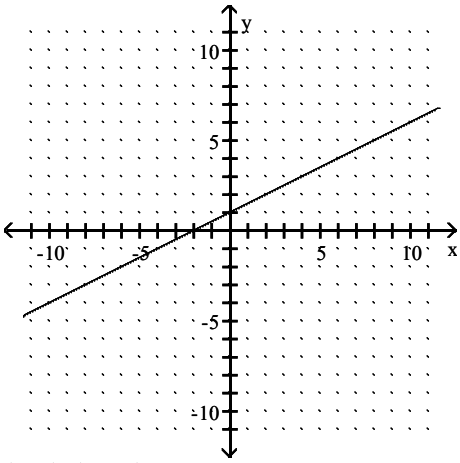

B) (–1, 0), (0, 2)

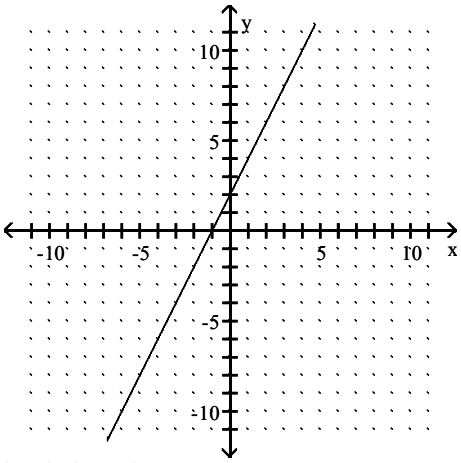

C) (2, 0), (0, –1)

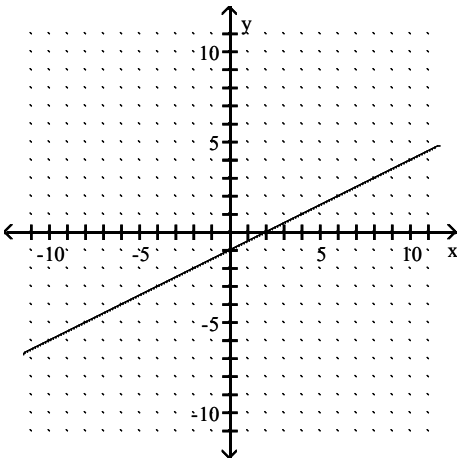

D) (1, 0), (0, –2)

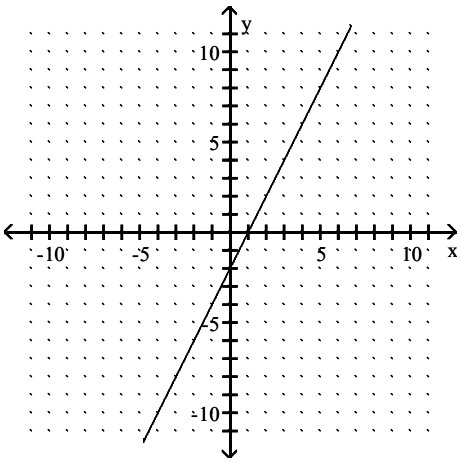

Answer: C

Trigonometry 5th edition Dugopolski Test Bank

52) $5x - 25y = 0$

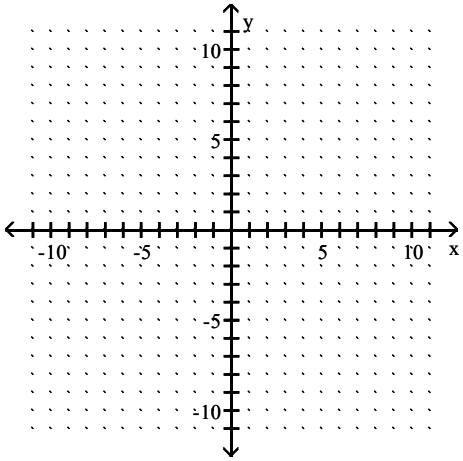

A) (0, 0), (0, 0)

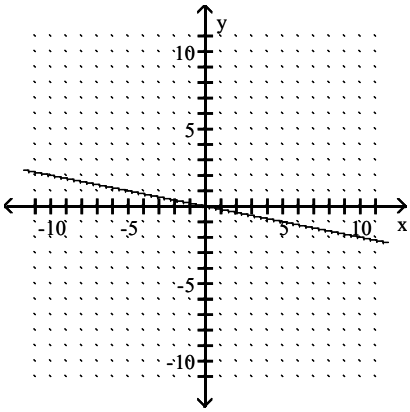

B) (0, 0), (0, 0)

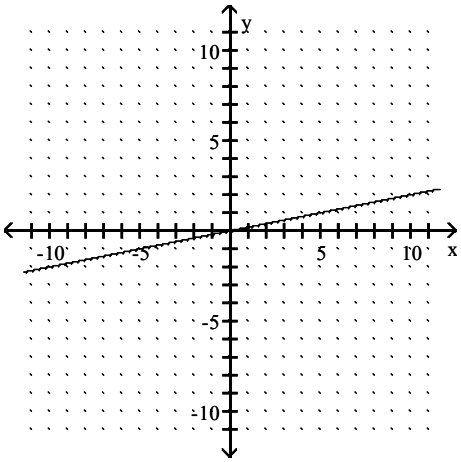

C) (0, 0), (0, 0)

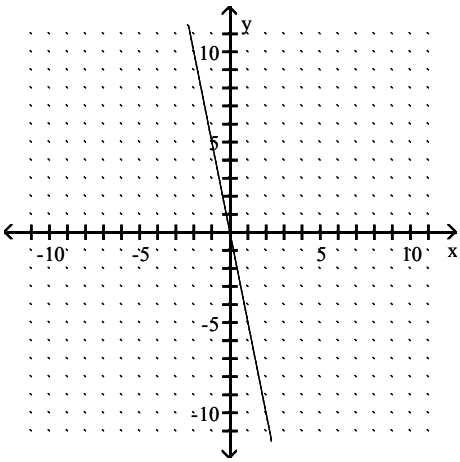

D) (0, 0), (0, 0)

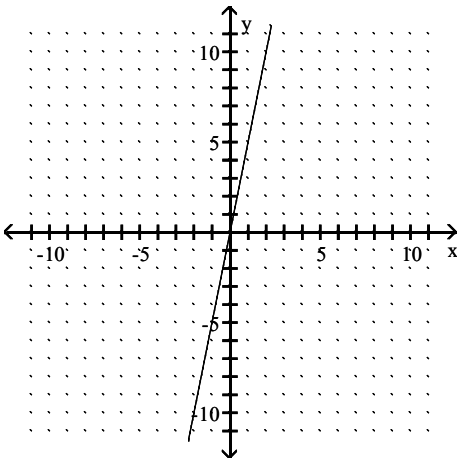

Answer: B

Trigonometry 5th edition Dugopolski Test Bank

53) $\frac{11}{5}x + \frac{1}{5}y = -2$

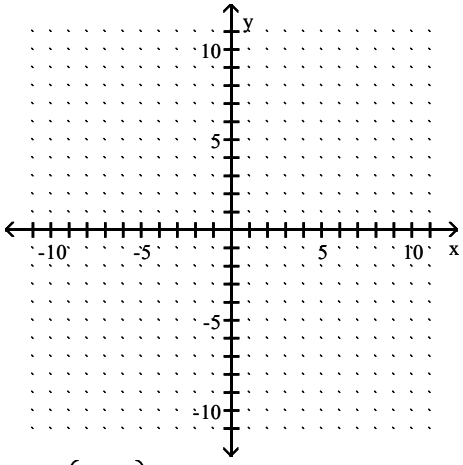

A) $\left(\frac{10}{11}, 0\right)$, $(0, -10)$

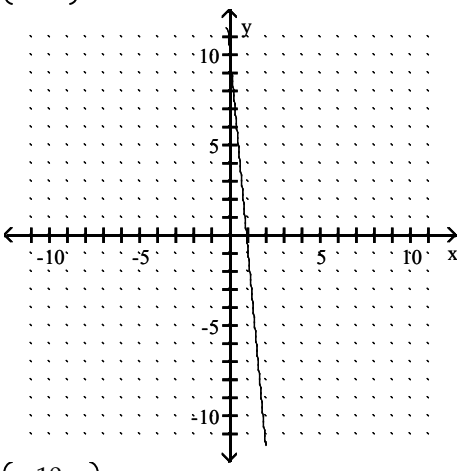

B) $\left(\frac{10}{11}, 0\right)$, $(0, 10)$

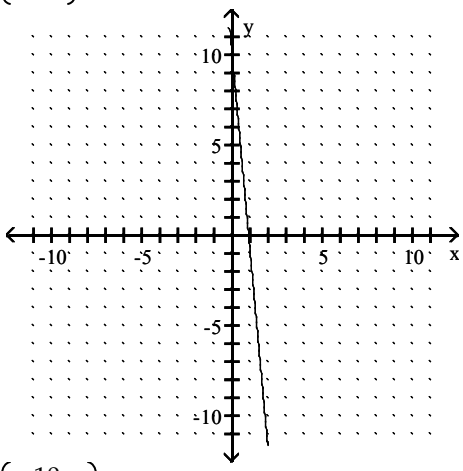

C) $\left(-\frac{10}{11}, 0\right)$, $(0, 10)$

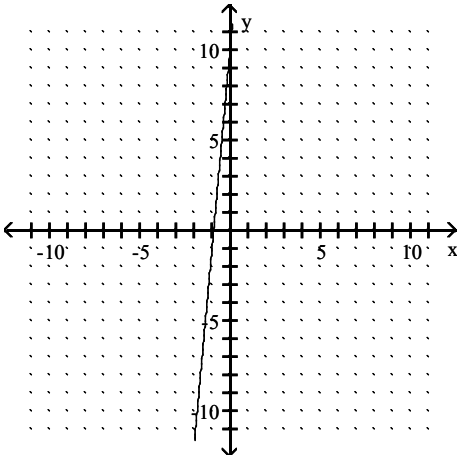

D) $\left(-\frac{10}{11}, 0\right)$, $(0, -10)$

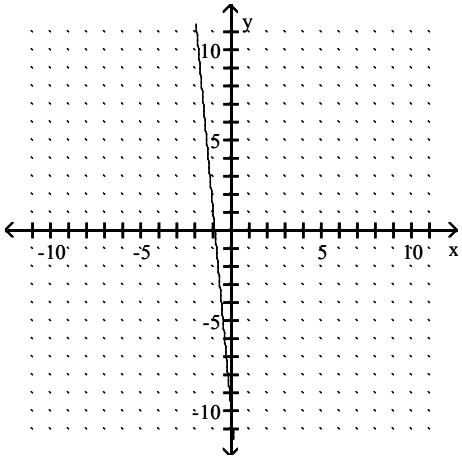

Answer: D

Trigonometry 5th edition Dugopolski Test Bank

Graph the equation in the rectangular coordinate system.

54) $y = 1$

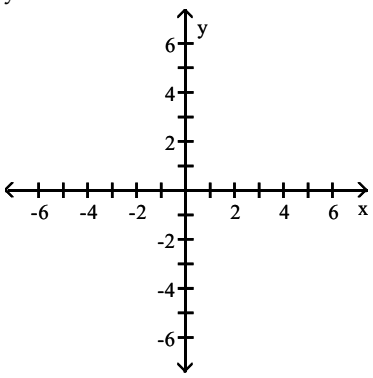

A)

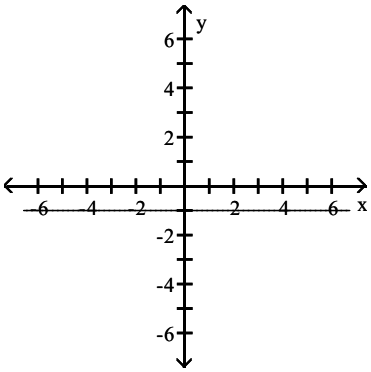

B)

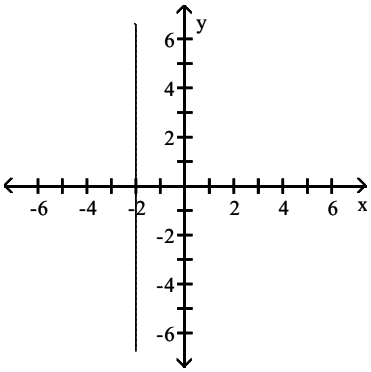

C)

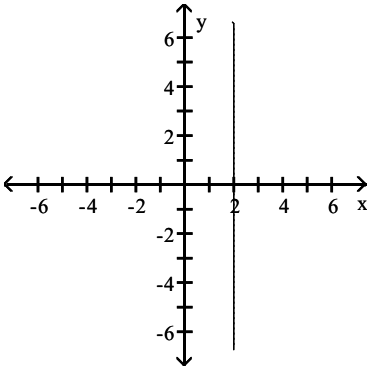

D)

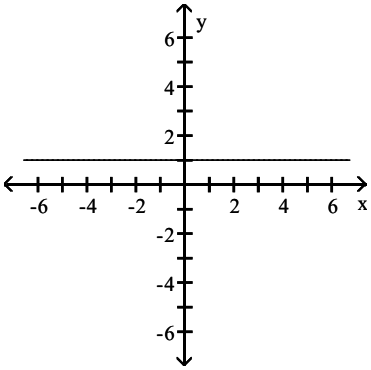

Answer: D

Trigonometry 5th edition Dugopolski Test Bank

55) x = 1

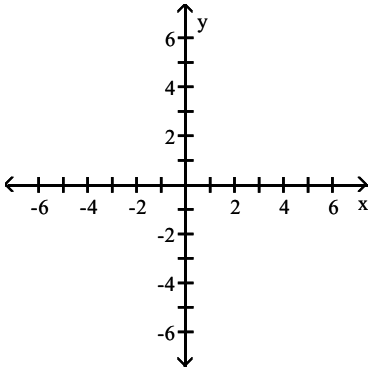

A)

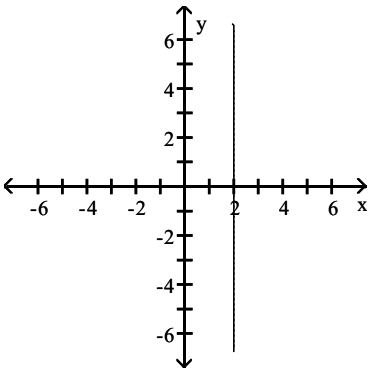

B)

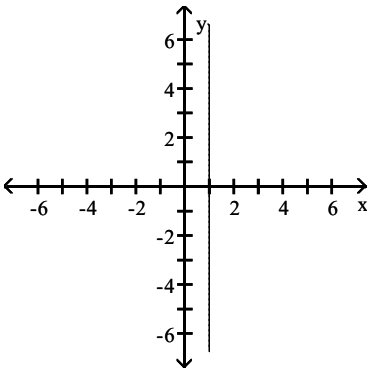

C)

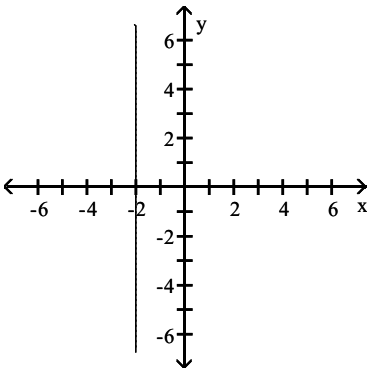

D)

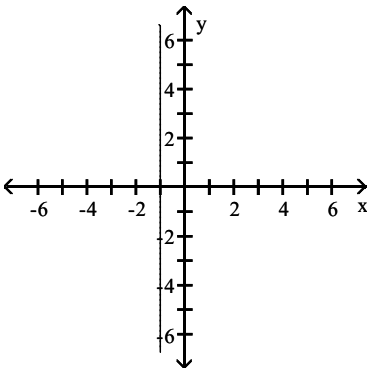

Answer: B

Trigonometry 5th edition Dugopolski Test Bank

56) $y + 3 = 0$

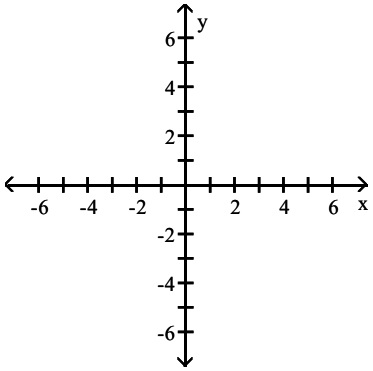

A)

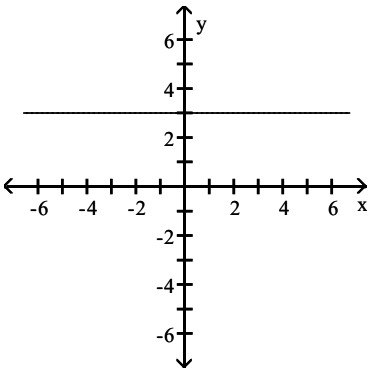

B)

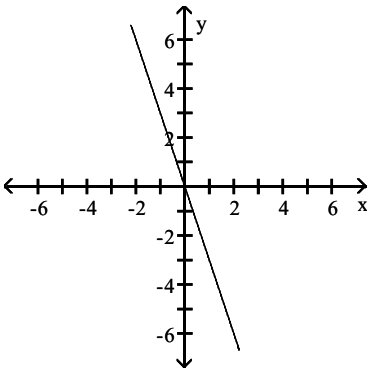

C)

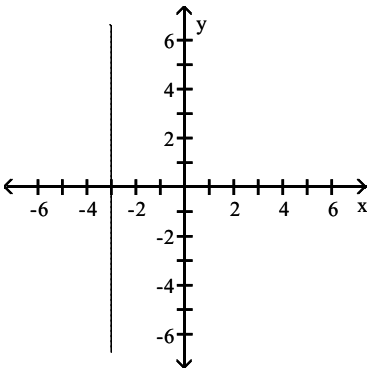

D)

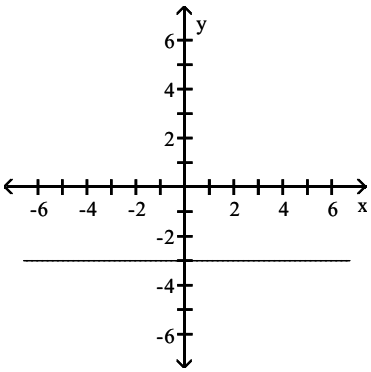

Answer: D

Trigonometry 5th edition Dugopolski Test Bank

57) $y - 2 = 0$

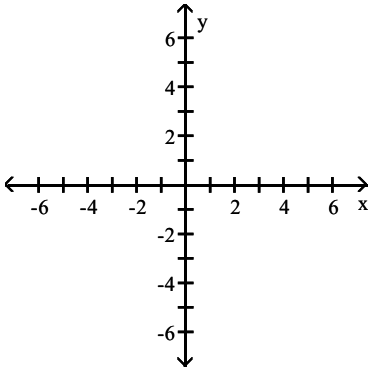

A)

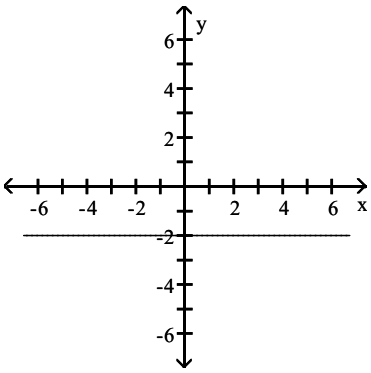

B)

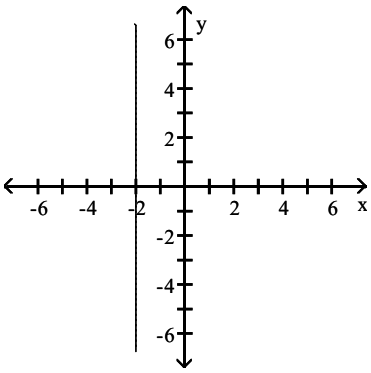

C)

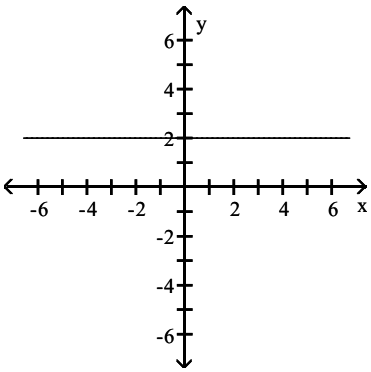

D)

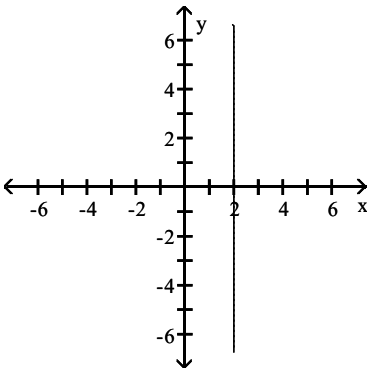

Answer: C

Trigonometry 5th edition Dugopolski Test Bank

58) $3 - x = 5$

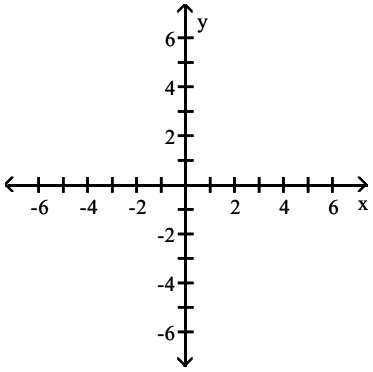

A)

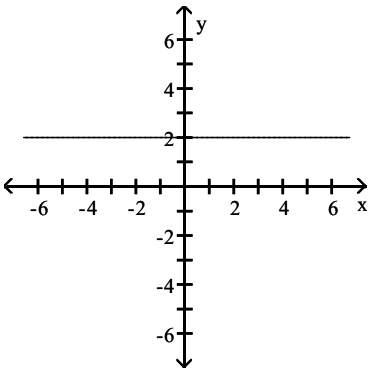

B)

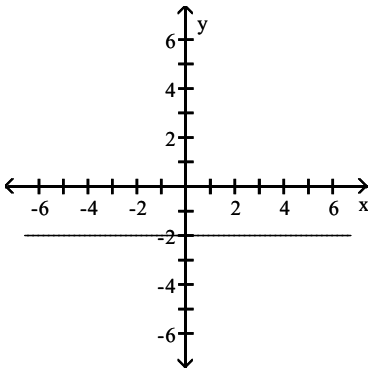

C)

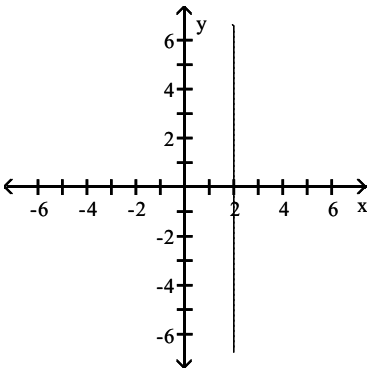

D)

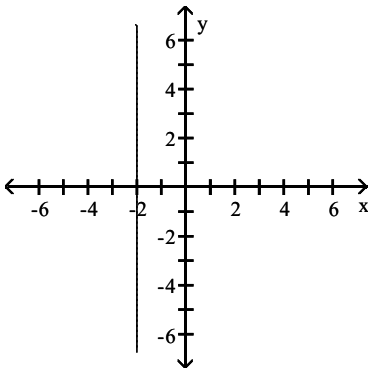

Answer: D

Solve the problem.

59) Find the value of x if the distance between the two points (x, –4) and (–12, 0) is 5.

A) –7, 17

B) $-12 + \sqrt{21}, -12 - \sqrt{21}$

C) –9, –15

D) $-12 + \sqrt{29}, -12 - \sqrt{29}$

Answer: C

60) Find the value of y if the distance between the two points (–6, y) and (0, 6) is 10.

A) 16, 4

B) $-6 + \sqrt{136}, -6 - \sqrt{136}$

C) $-6 + \sqrt{94}, -6 - \sqrt{94}$

D) 14, –2

Answer: D

Trigonometry 5th edition Dugopolski Test Bank

61) Find the value of x if the distance between the two points (x, 5) and (12, –3) is 9.

A) $12 + \sqrt{89}, 12 - \sqrt{89}$
B) $12 + \sqrt{17}, 12 - \sqrt{17}$
C) $12 + \sqrt{145}, 12 - \sqrt{145}$
D) 17, –6

Answer: B

62) Write an equation for all points that are 6 units from (8, 6).

A) $(x - 8)^2 + (y - 6)^2 = 6$
B) $(x - 8)^2 + (y - 6)^2 = 36$
C) $(x + 8)^2 - (y + 6)^2 = 36$
D) $(x + 8)^2 + (y + 6)^2 = 36$

Answer: B

63) Write an equation for all points that are 8 units from (–5, 10).

A) $(x - 5)^2 - (y + 10)^2 = 64$
B) $(x + 5)^2 + (y - 10)^2 = 8$
C) $(x + 5)^2 + (y - 10)^2 = 64$
D) $(x - 5)^2 + (y + 10)^2 = 64$

Answer: C

64) If the legs of a right triangle have lengths 9 and 4, what is the length of the hypotenuse, that is, the longest side? Round your answer to the nearest tenth.

A) 9.8
B) 3.6
C) 97.0
D) 8.1

Answer: A

65) In a football game, the quarterback throws a pass from the 23–yard line, 19 yards from the sideline. The pass is caught on the 26–yard line, 15 yards from the same sideline. How long was the pass? (Assume the pass and the reception are on the same side of midfield. Round your answer to the nearest tenth.)

A) 5 yards
B) 1 yards
C) 13.6 yards
D) 2.6 yards

Answer: A

66) A pyramid was constructed for a mini golf center which featured the man–made wonders of the world. The pyramid is depicted in the figure below. Find the length x of a slant edge of the pyramid. Round your answer to the nearest hundredth.

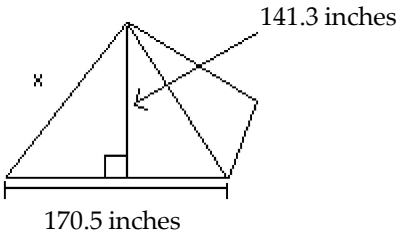

A) 165.03 inches
B) 221.44 inches
C) 27,233.25 inches
D) 112.69 inches

Answer: A

67) A certain expansion bridge normally measures 1,294 feet but expands by 1.6 feet on a hot day. If there were no expansion joints to absorb the elongation, the bridge might buckle as shown in the figure. Estimate the height of the bulge, AB. Note that chord BC is approximately the same as the length of arc BC. Round your answer to the nearest hundredth.

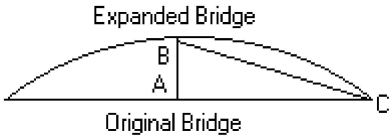

A) 1,035.84 feet
B) 32.18 feet
C) 1.6 feet
D) 64.37 feet

Answer: B

Trigonometry 5th edition Dugopolski Test Bank

For the given pair of variables determine whether a is a function of b, b is a function of a, both, or neither.

68) a is the number of years of formal education of an adult living in the United States, and b is his or her age in years.

A) b is a function of a B) Both C) Neither D) a is a function of b

Answer: C

69) a is the radius of any spherical bowling ball, and b is its volume.

A) Neither B) b is a function of a C) a is a function of b D) Both

Answer: D

70) a is the savings account number of a customer at a bank, and b is the number of years the account has been active.

A) Neither B) b is a function of a C) a is a function of b D) Both

Answer: B

Graph the equation.

71) $y = 2x + 3$

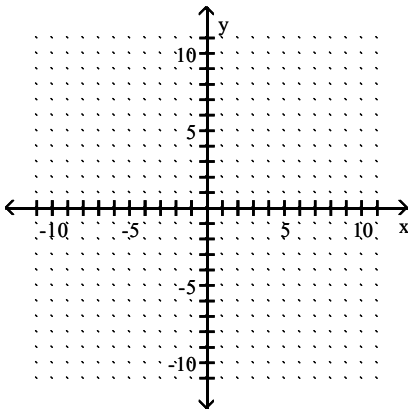

A)

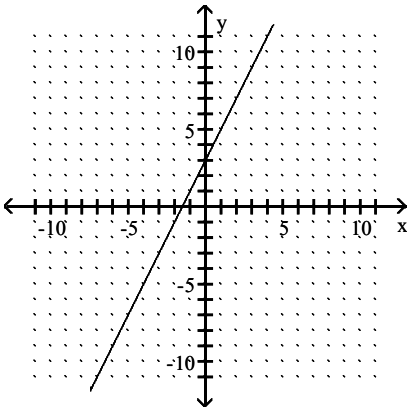

B)

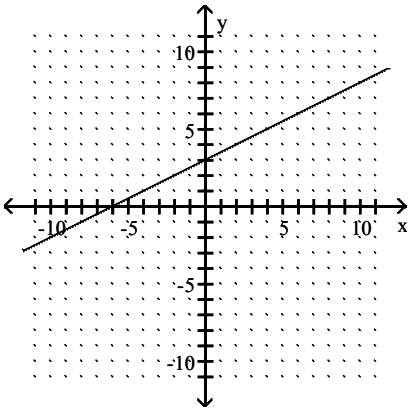

C)

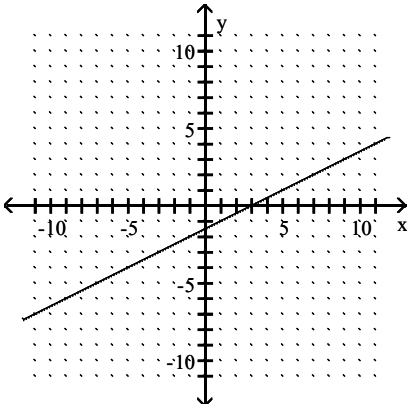

D)

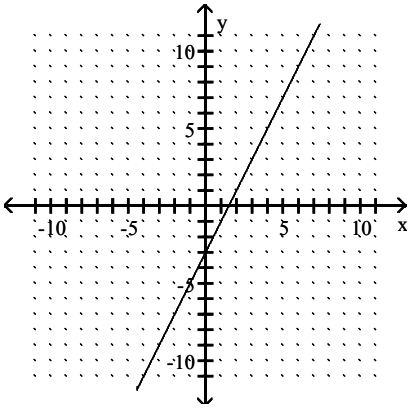

Trigonometry 5th edition Dugopolski Test Bank

Answer: A

72) $y = x^2 - 5$

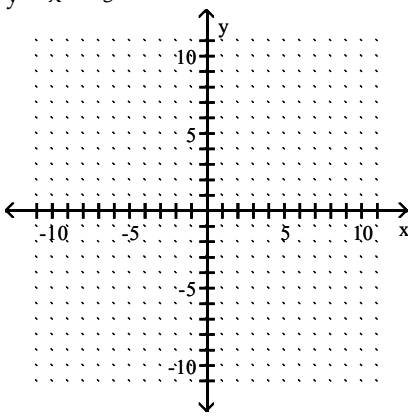

A)

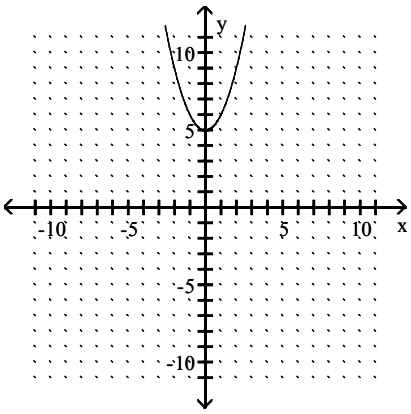

B)

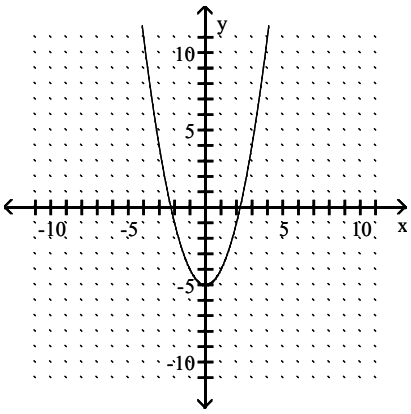

C)

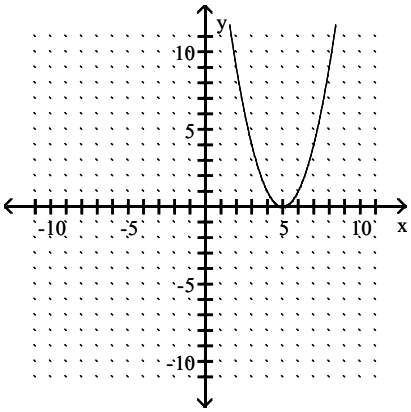

D)

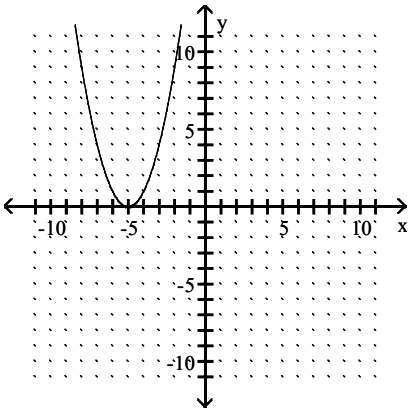

Answer: B

Trigonometry 5th edition Dugopolski Test Bank

73) $y = \sqrt{x - 3}$

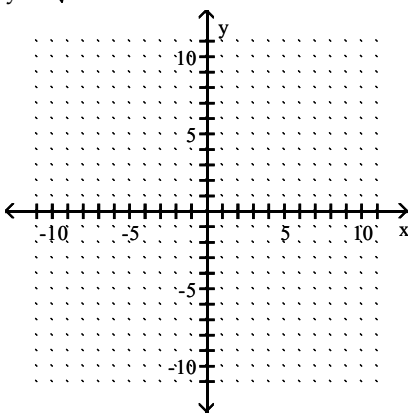

A)

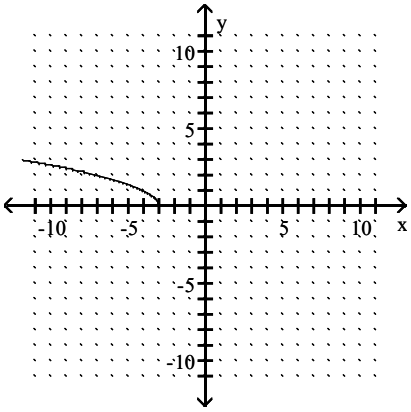

B)

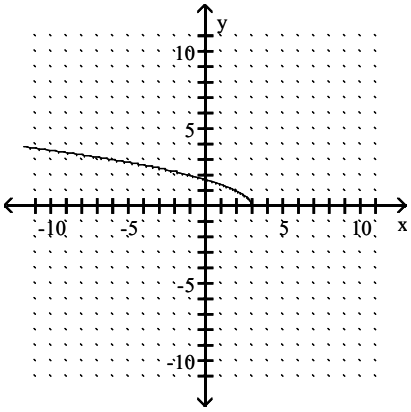

C)

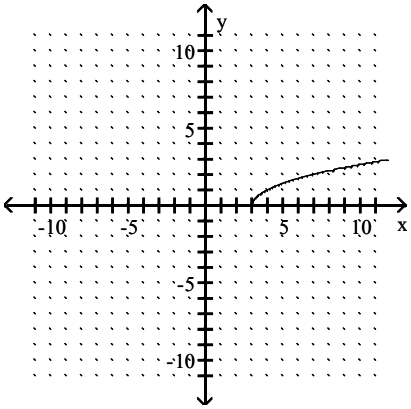

D)

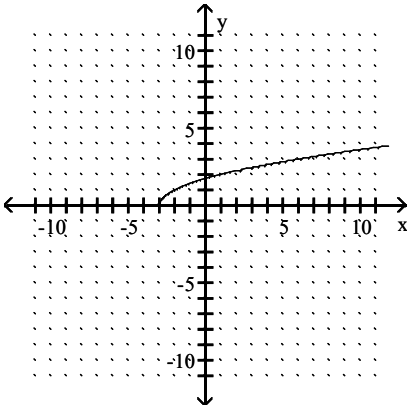

Answer: C

Trigonometry 5th edition Dugopolski Test Bank

74) $y = -\sqrt{8 - x}$

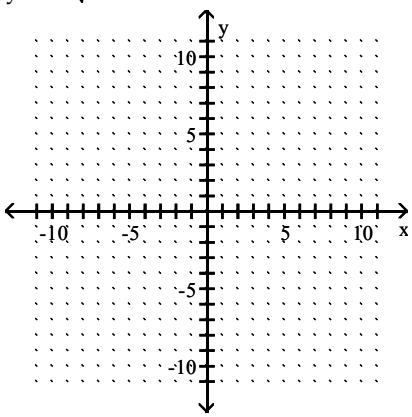

A)

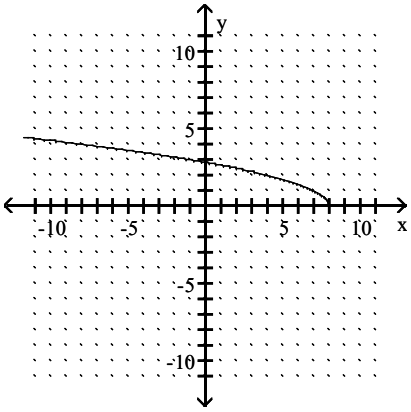

B)

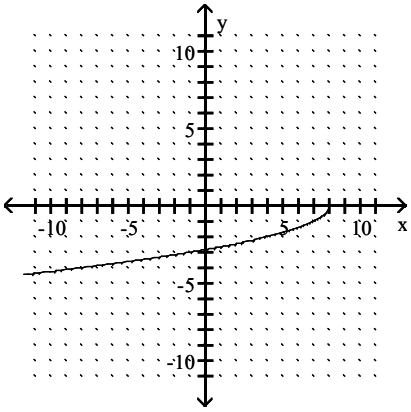

C)

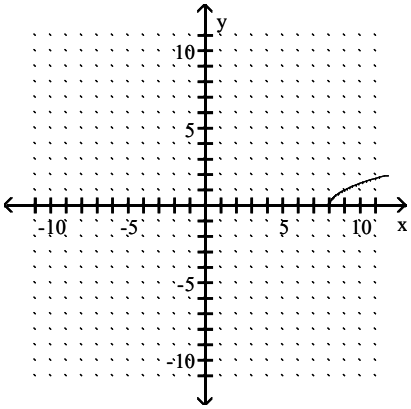

D)

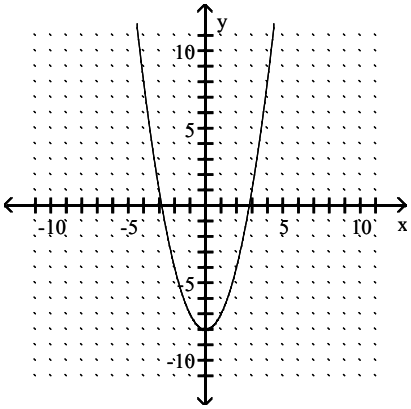

Answer: B

Trigonometry 5th edition Dugopolski Test Bank

75) $y = | -3 - x |$

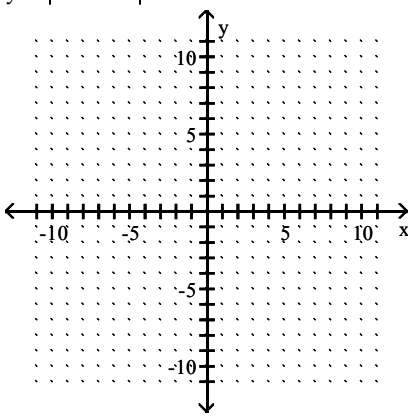

A)

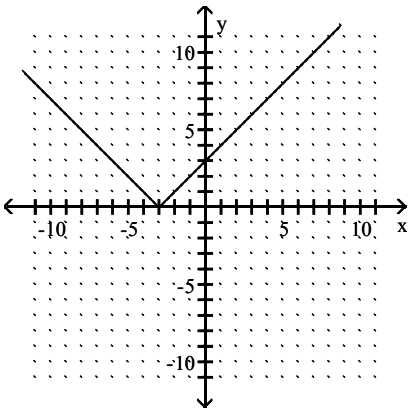

B)

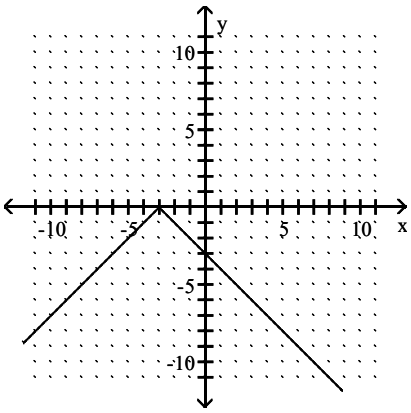

C)

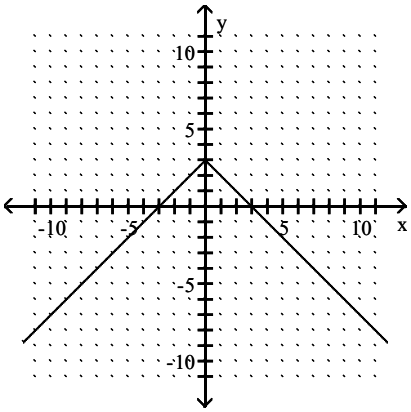

D)

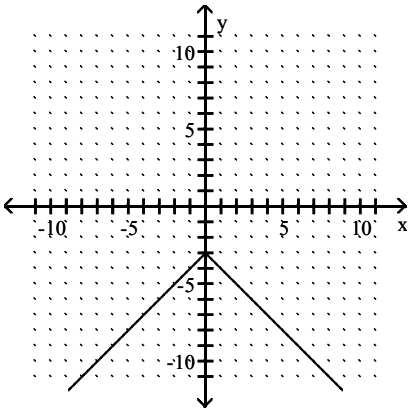

Answer: A

Trigonometry 5th edition Dugopolski Test Bank

76) $y = 9|x| - 6$

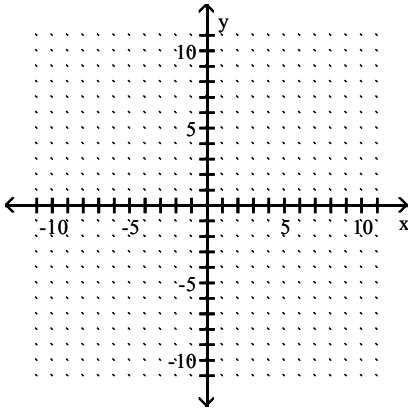

A)

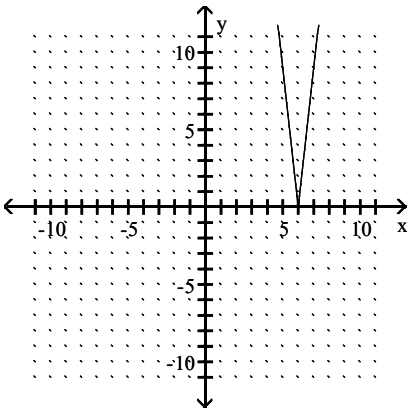

B)

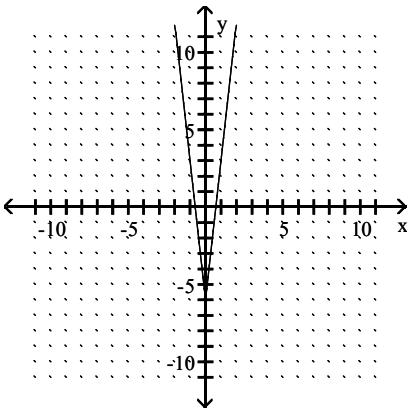

C)

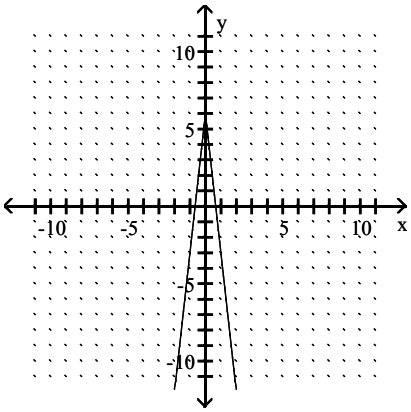

D)

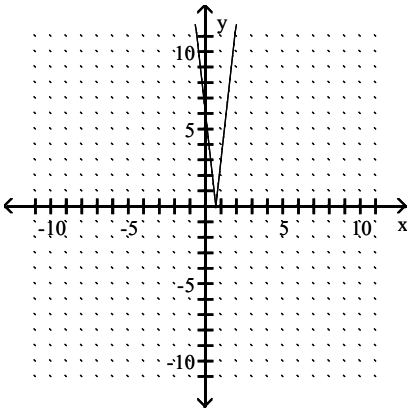

Answer: B

Find the domain and range of the function.

77) $y = x - 2$

A) D = [0, ∞), R = [−2, ∞)
B) D = (−∞, ∞), R = [0, ∞)
C) D = (−∞, ∞), R = (−∞, ∞)
D) D = [2, ∞), R = [0, ∞)

Answer: C

78) $y = x^3 + 7$

A) D = (−∞, ∞), R = (−∞, ∞)
B) D = [0, ∞), R = [7, ∞)
C) D = (−∞, ∞), R = [0, ∞)
D) D = (−∞, ∞), R = [7, ∞)

Answer: A

Trigonometry 5th edition Dugopolski Test Bank

79) $y = \sqrt{x - 1}$

A) D = [1, ∞), R = (−∞, ∞)
B) D = (−∞, ∞), R = (−∞, ∞)
C) D = [1, ∞), R = [0, ∞)
D) D = (−∞, ∞), R = [0, ∞)

Answer: C

80) $y = |x - 2|$

A) D = [2, ∞), R = [0, ∞)
B) D = [0, ∞), R = [−2, ∞)
C) D = (−∞, ∞), R = (−∞, ∞)
D) D = (−∞, ∞), R = [0, ∞)

Answer: D

Perform the requested evaluation.

81) Given $f(x) = (x - 9)^2$, find f(8).

A) −1
B) 289
C) 1
D) −2

Answer: C

82) Given $f(x) = -|x - 2|$, find f(4).

A) −2
B) −6
C) 2
D) 6

Answer: A

83) Given $f(x) = -5x^2 - 6x + 4$, find f(−4).

A) −82
B) 48
C) −52
D) −56

Answer: C

84) Given $g(x) = 5x + 1$, find g(a + 1).

A) 5a − 1
B) $\frac{1}{5}a + 1$
C) 5a + 1
D) 5a + 6

Answer: D

85) Given $f(x) = x^2 - 1$, find f(a − 3).

A) $a^2 + 9$
B) $a^2 - 4$
C) $a^2 - 6a + 9$
D) $a^2 - 6a + 8$

Answer: D

86) Given $f(x) = 2x^2 + x$, find f(x + h) − f(x).

A) $2h^2 + h$
B) $4xh + 2h^2 + 2x + h$
C) $4xh + 2h^2$
D) $4xh + 2h^2 + h$

Answer: D

Solve the problem.

87) If a man in a cycling class burns 650 calories per hour, express the number of calories burned, C, as a function of the number of hours spent cycling, n.

A) C = 650 + n
B) C = 650n
C) $C = \frac{650}{n}$
D) n = 650C

Answer: B

88) If the average person in Country X consumes 360 lb of poultry annually, express the total annual poultry consumption of Country X, P, as a function of the size of the population, n.

A) n = 360P
B) P = n − 360
C) P = 360n
D) P = 360

Answer: C

Trigonometry 5th edition Dugopolski Test Bank

89) If a contractor charges \$100 per visit plus \$10 per hour, express the total charge C as a function of the number of hours worked, n

A) C = 100n + 40 B) C = 100n – 10 C) C = 100 + 10n D) C = 100 – 40n

Answer: C

90) At a pizzaria, the cost of a pizza is \$18.75 plus \$0.80 for each topping. Express the total cost of a pizza, C, as a function of the number of toppings, n.

A) C = 18.75 + 0.90n B) C = 18.75 + 0.80n C) C = 18.75n + 0.80 D) C = 18.75n + 0.90

Answer: B

91) The capsize screening value C is an indicator of a sailboat's suitability for extended offshore sailing. C is determined by the function $C = 4D^{-1/3}B$, where D is the displacement of the boat in pounds and B is its beam (or width) in feet. Find C for a sailboat that has a displacement of 20,223 lb and a beam of 17 ft 6 in. Round your answer to three decimal places.

A) C ≈ 3.377 B) C ≈ 2.569 C) C ≈ 30.832 D) C ≈ 1,907.128

Answer: B

92) The capsize screening value C is an indicator of a sailboat's suitability for extended offshore sailing. C is determined by the function $C = 4D^{-1/3}B$, where D is the displacement of the boat in pounds and B is its beam (or width) in feet. The International Offshore Rules require that the capsize screening value be less than or equal to 2 for safety. What is the maximum allowable beam (to the nearest inch) for a boat with a displacement of 20,320 lb?

A) 27 ft 3 in. B) 13 ft 8 in. C) 6 ft 10 in. D) 71 ft 3 in.

Answer: B

Graph the pair of functions on the same plane. Use a dashed line for g(x).

93) $f(x) = x^2$, $g(x) = x^2 - 2$

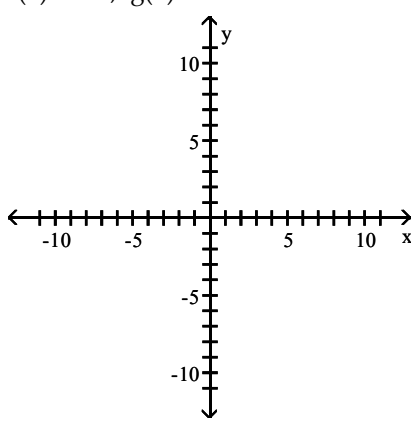

A)

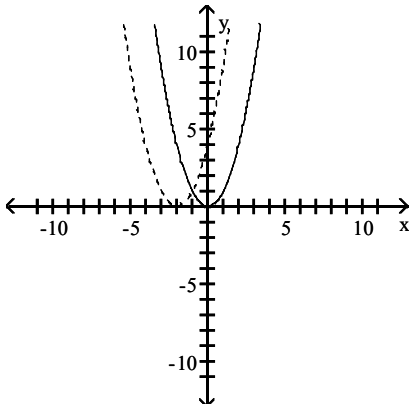

B)

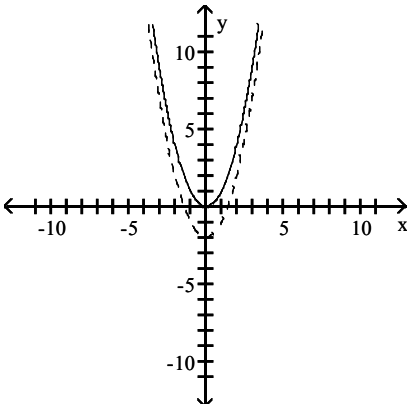

Trigonometry 5th edition Dugopolski Test Bank

C)

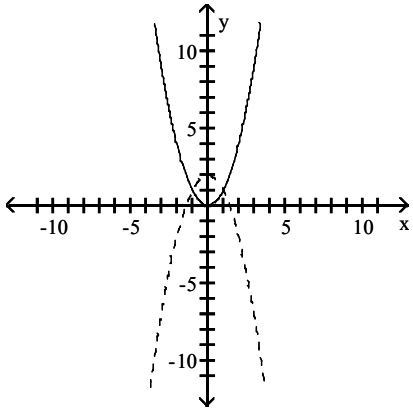

D)

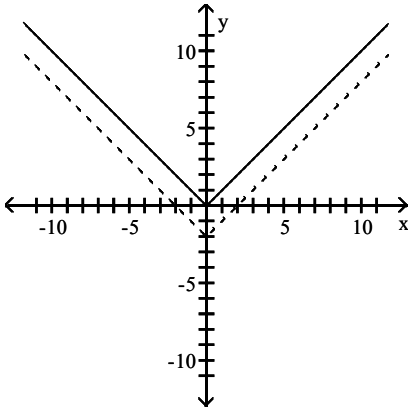

Answer: B

94) $f(x) = |x|$, $g(x) = |x - 3|$

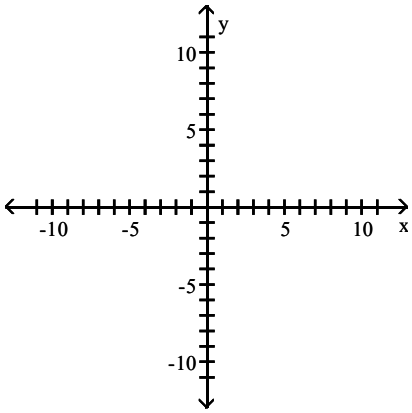

A)

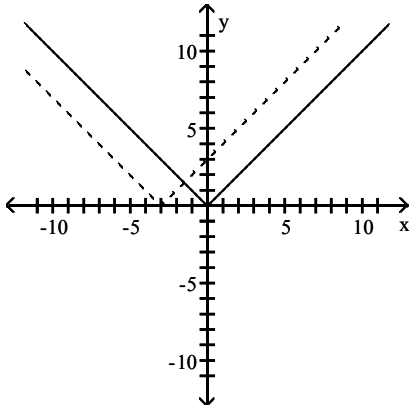

B)

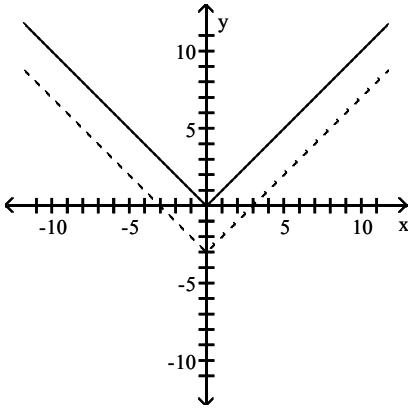

Trigonometry 5th edition Dugopolski Test Bank

C)

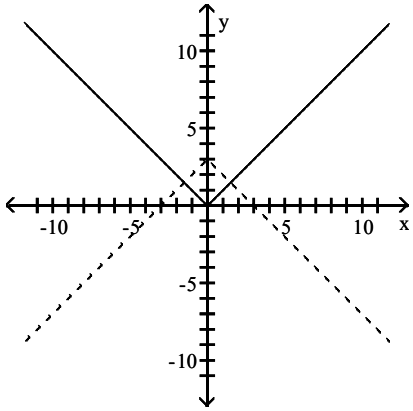

D)

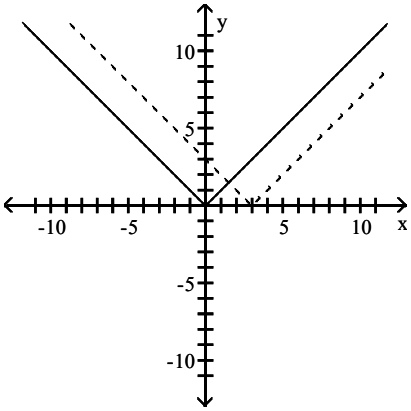

Answer: D

95) $f(x) = x^3$, $g(x) = (x + 2)^3$

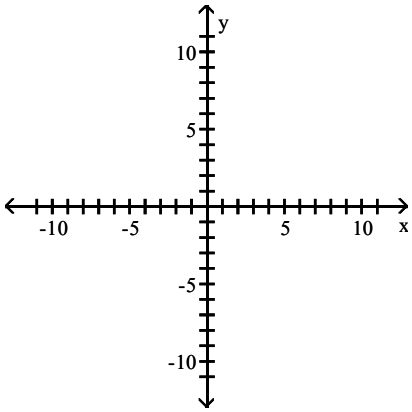

A)

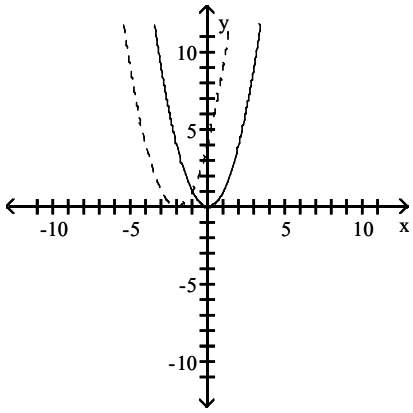

B)

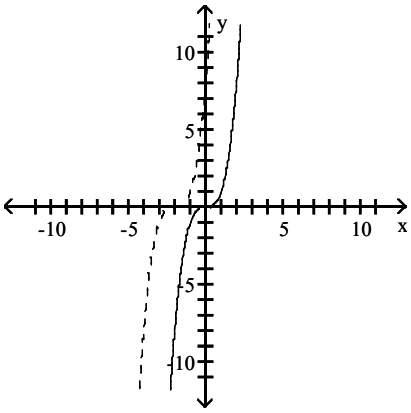

Trigonometry 5th edition Dugopolski Test Bank

C)

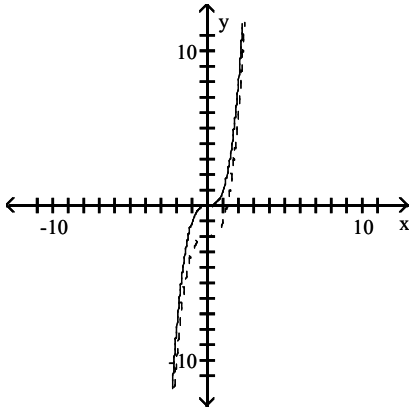

D)

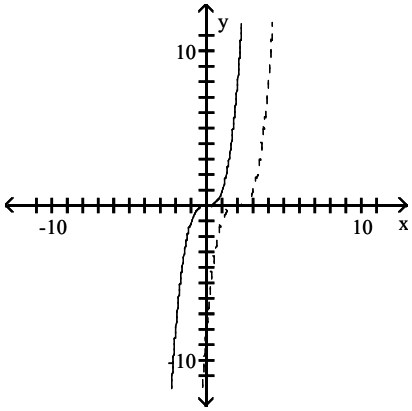

Answer: B

96) $f(x) = |x|$, $g(x) = -4|x|$

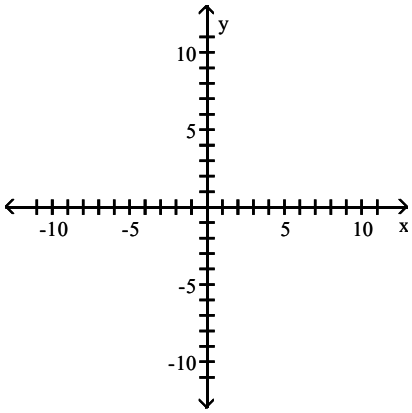

A)

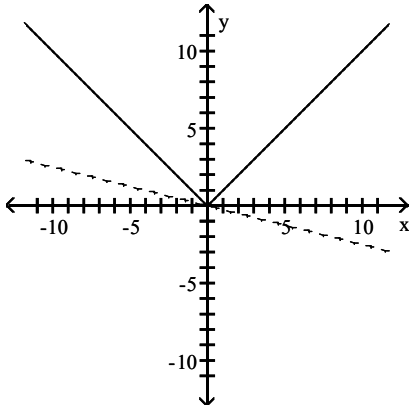

B)

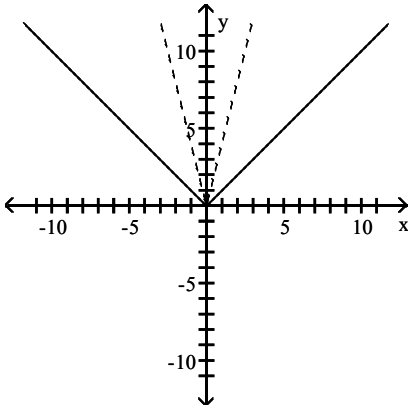

Trigonometry 5th edition Dugopolski Test Bank

C)

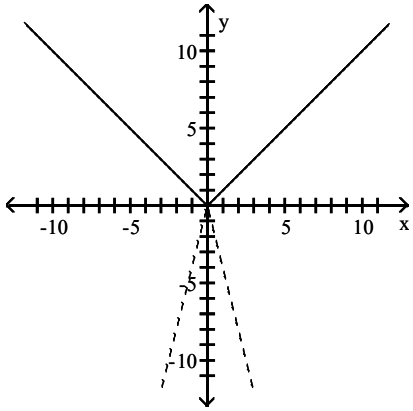

D)

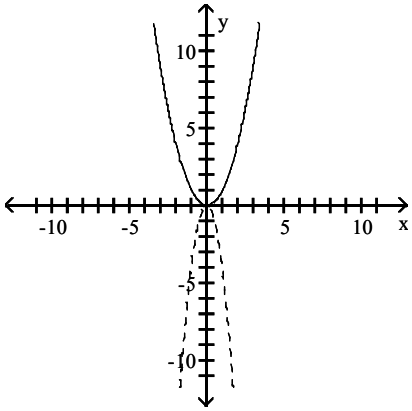

Answer: C

97) $f(x) = x^2$, $g(x) = (x - 5)^2 - 2$

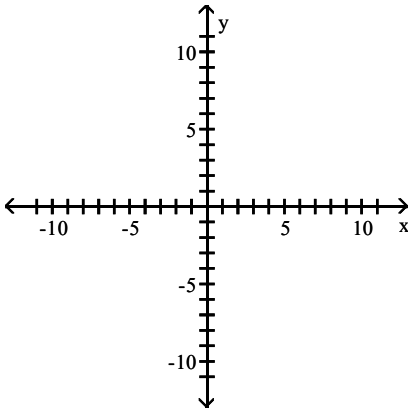

A)

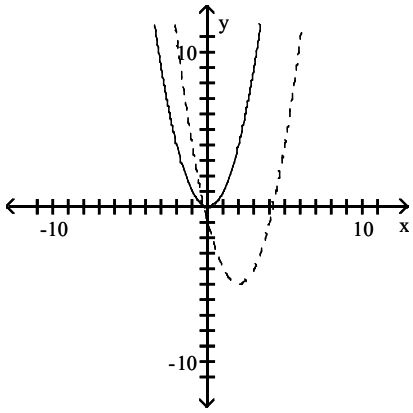

B)

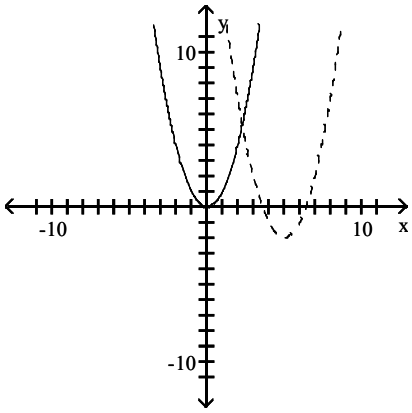

Trigonometry 5th edition Dugopolski Test Bank

C)

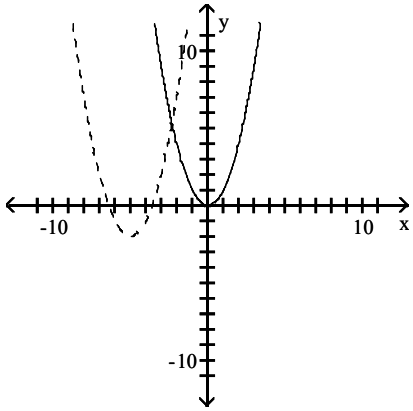

D)

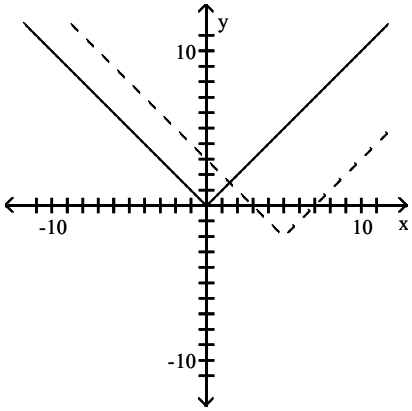

Answer: B

98) $f(x) = x^2$, $g(x) = -\frac{1}{4}(x + 2)^2 + 5$

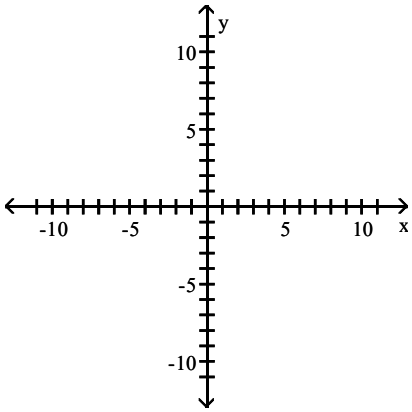

A)

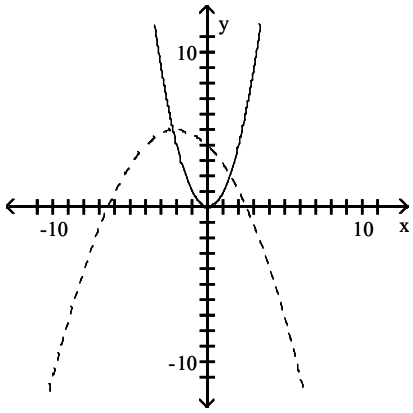

B)

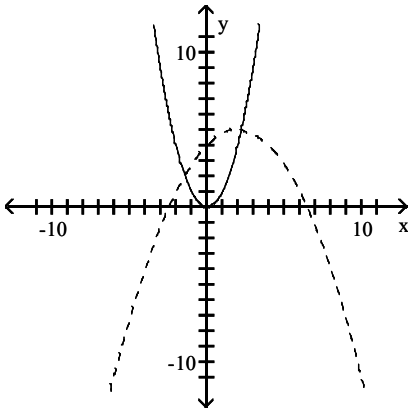

Trigonometry 5th edition Dugopolski Test Bank

C)

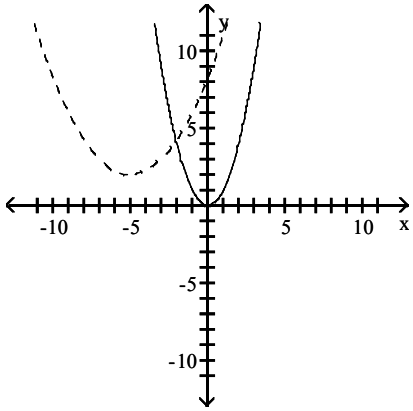

D)

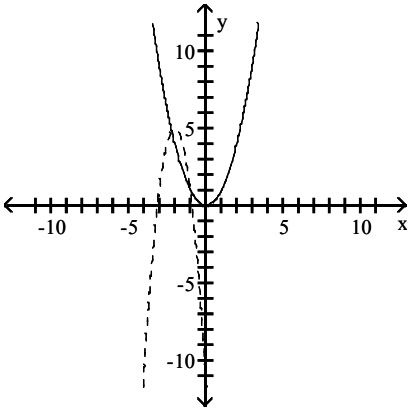

Answer: A

99) $f(x) = \sqrt[3]{x}$, $g(x) = \sqrt[3]{x} + 4$

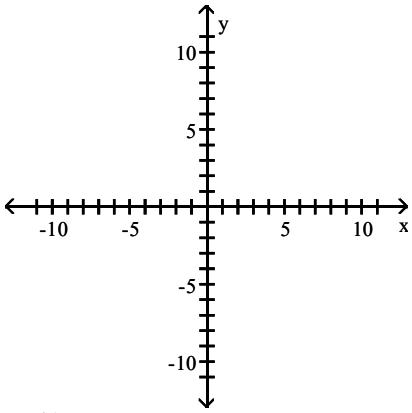

A)

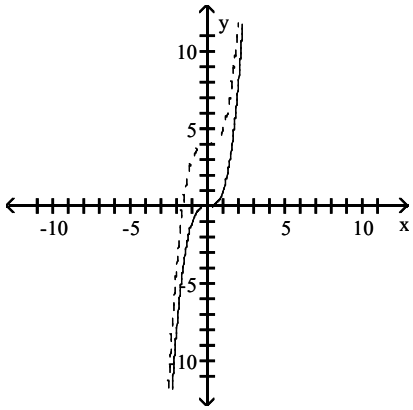

B)

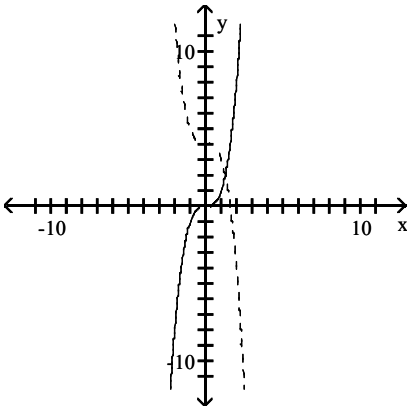

Trigonometry 5th edition Dugopolski Test Bank

C)

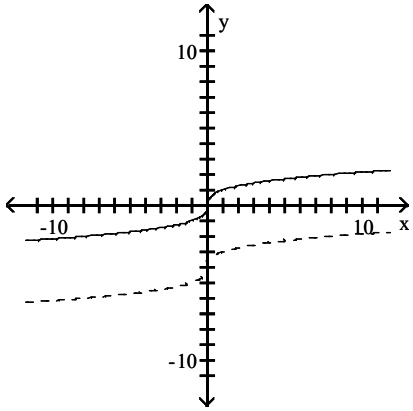

D)

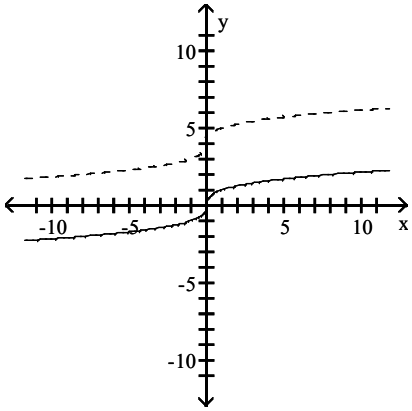

Answer: D

100) $f(x) = |x|$, $g(x) = \frac{1}{3}|x + 2| - 6$

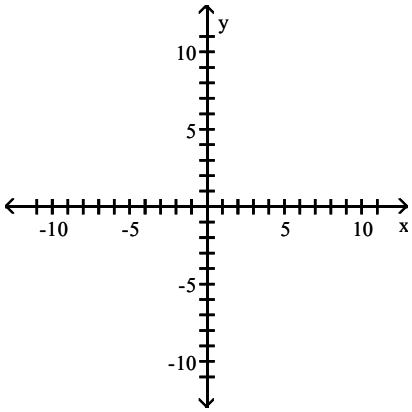

A)

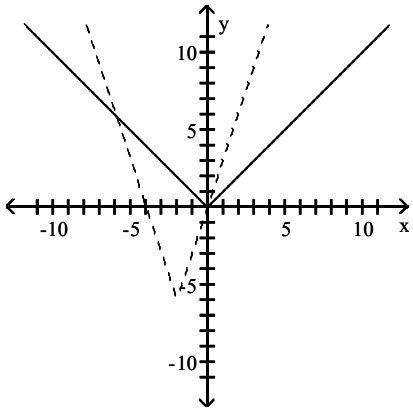

B)

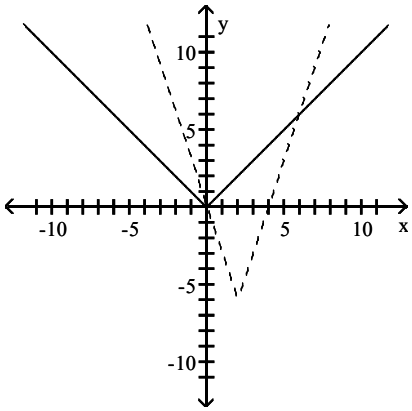

Trigonometry 5th edition Dugopolski Test Bank

C)

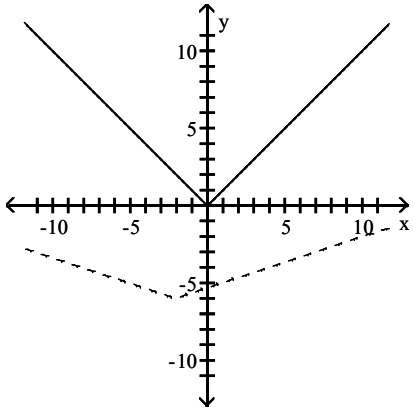

D)

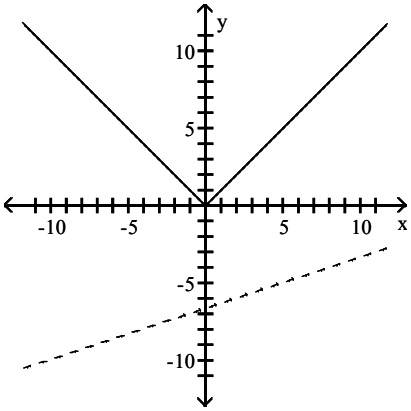

Answer: C

Select the function that matches the given graph.

101)

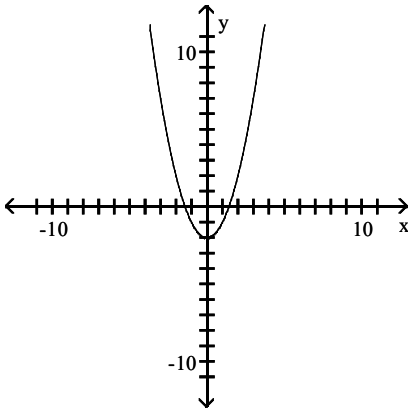

A) $y = (x - 2)^2$ B) $y = x^2 - 2$ C) $y = x^2 + 2$ D) $y = (x + 2)^2$

Answer: B

102)

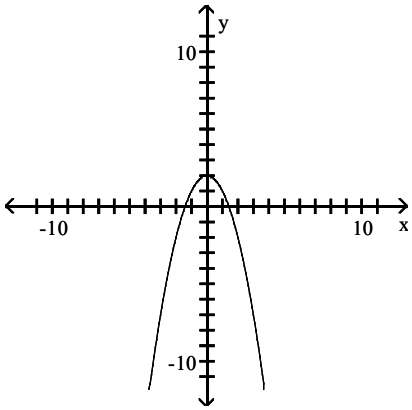

A) $y = -x^2 + 2$ B) $y = x^2 + 2$ C) $y = -(x + 2)^2$ D) $y = (x - 2)^2$

Answer: A

Trigonometry 5th edition Dugopolski Test Bank

103)

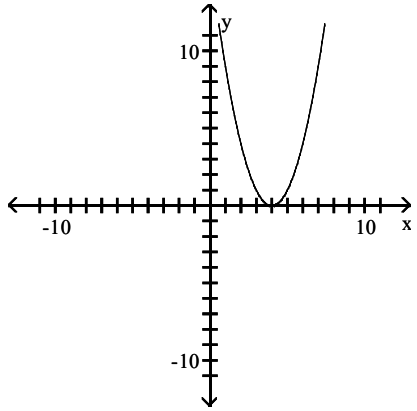

A) $y = (x - 4)^2$ B) $y = (x + 4)^2$ C) $y = x^2 + 4$ D) $y = x^2 - 4$

Answer: A

104)

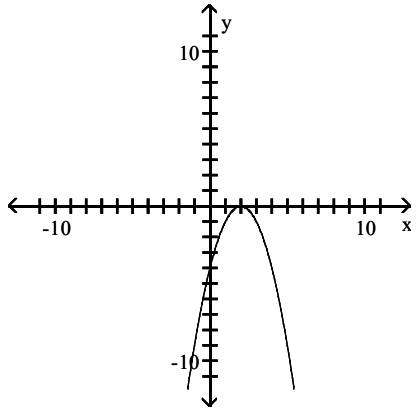

A) $y = (x + 2)^2$ B) $y = -(x - 2)^2$ C) $y = -x^2 + 2$ D) $y = (x - 2)^2$

Answer: B

105)

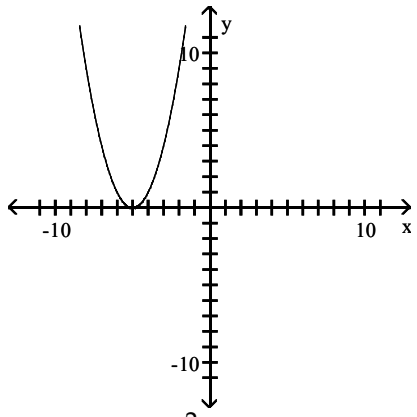

A) $y = (x + 5)^2$ B) $y = x^2 + 5$ C) $y = (x - 5)^2$ D) $y = x^2 - 5$

Answer: A

Trigonometry 5th edition Dugopolski Test Bank

106)

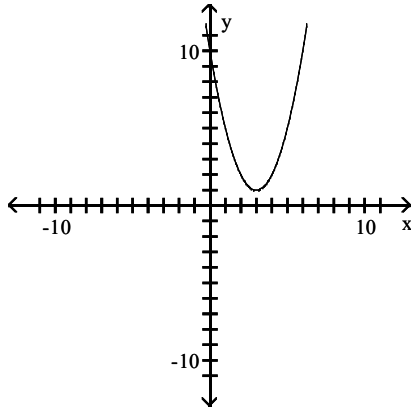

A) $y = (x + 3)^2 - 1$ B) $y = x^2 - 3$ C) $y = (x + 3)^2 + 1$ D) $y = (x - 3)^2 + 1$

Answer: D

Write the equation of the graph in its final position.

107) The graph of $y = \sqrt{x}$ is translated 9 units to the right.

A) $y = \sqrt{x} + 9$ B) $y = \sqrt{x} - 9$ C) $y = \sqrt{x - 9}$ D) $y = \sqrt{x + 9}$

Answer: C

108) The graph of $y = x^2$ is translated 5 units to the left and 8 units downward.

A) $y = (x + 5)^2 - 8$ B) $y = (x + 8)^2 - 5$ C) $y = (x - 5)^2 - 8$ D) $y = (x - 8)^2 + 5$

Answer: A

109) The graph of $y = x^2$ is vertically stretched by a factor of 4, and the resulting graph is reflected across the x–axis.

A) $y = 4x^2$ B) $y = 4(x - 4)x^2$ C) $y = -4x^2$ D) $y = (x - 4)^2$

Answer: C

110) The graph of $y = x^3$ is shifted 7.8 units to the right and then vertically shrunk by a factor of 0.5.

A) $y = 0.5x^3 + 7.8$ B) $y = 7.8(x - 0.5)^3$ C) $y = 0.5(x + 7.8)^3$ D) $y = 0.5(x - 7.8)^3$

Answer: D

111) The graph of $y = |x|$ is vertically stretched by a factor of 9. This graph is then reflected across the x–axis. Finally, the graph is shifted 0.47 units downward.

A) $y = -9|x| - 0.47$ B) $y = 9|x - 0.47|$ C) $y = 9|-x| - 0.47$ D) $y = 9|x| - 0.47$

Answer: A

112) The graph of $y = \sqrt{x}$ is shifted 7 units to the left. Then the graph is shifted 2 units upward.

A) $y = \sqrt{x - 7} + 2$ B) $y = 2\sqrt{x + 7}$ C) $y = \sqrt{x + 2} + 7$ D) $y = \sqrt{x + 7} + 2$

Answer: D

113) The graph of $y = |x|$ is reflected across the y–axis. This graph is then vertically stretched by a factor of 6.8. Finally, the graph is shifted 9 units downward.

A) $y = 6.8|-x| - 9$ B) $y = 9|-x| - 6.8$ C) $y = 6.8|-x| + 9$ D) $y = -6.8|x| - 9$

Answer: A

Use one or more transformations to graph the function.

Trigonometry 5th edition Dugopolski Test Bank

114) $y = x^2 - 3$

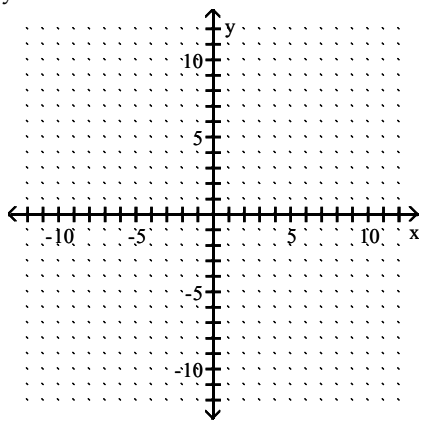

A)

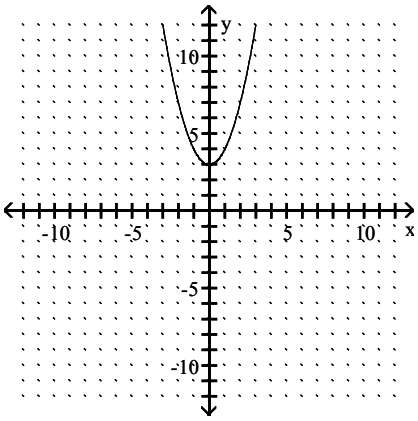

B)

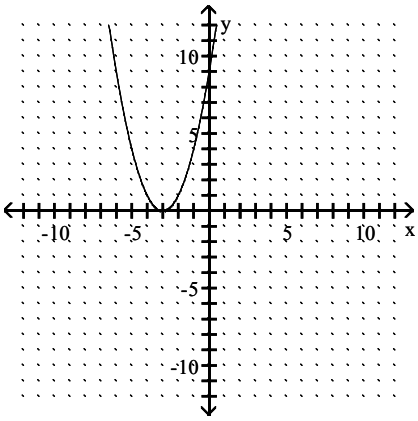

C)

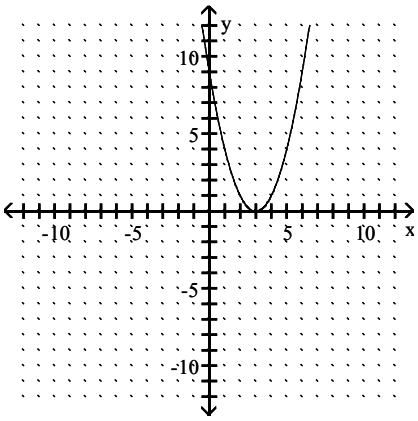

D)

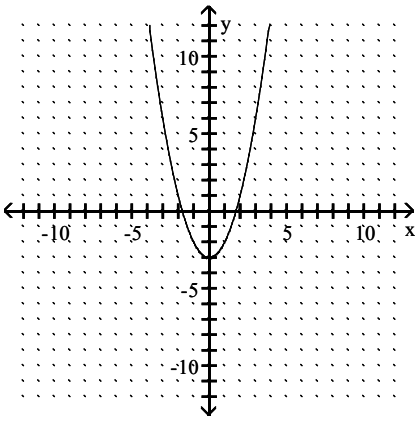

Answer: D

Trigonometry 5th edition Dugopolski Test Bank

115) $y = -2(x - 3)^2 - 5$

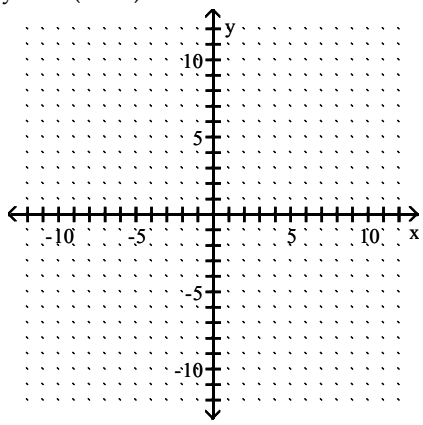

A)

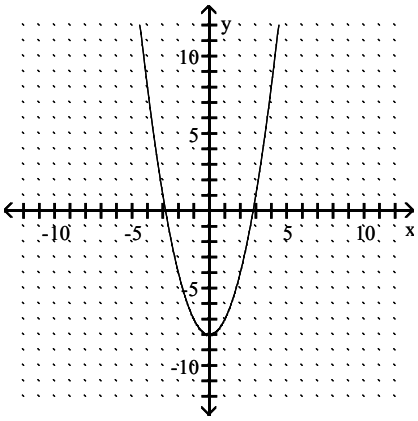

B)

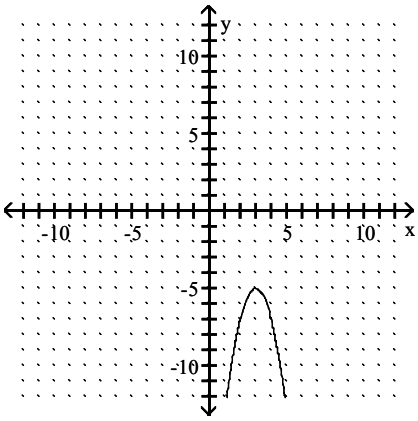

C)

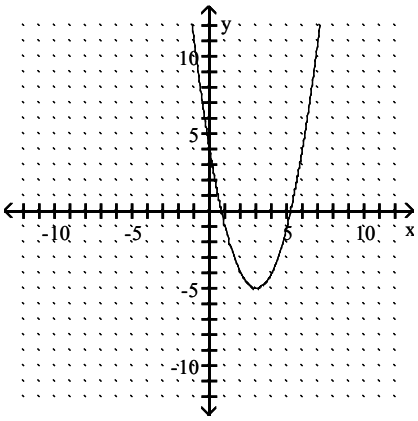

D)

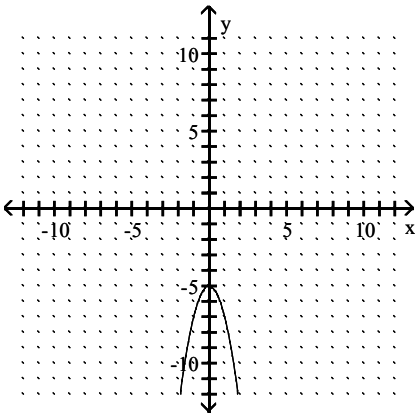

Answer: B

Trigonometry 5th edition Dugopolski Test Bank

116) $y = 3x^2 - 2$

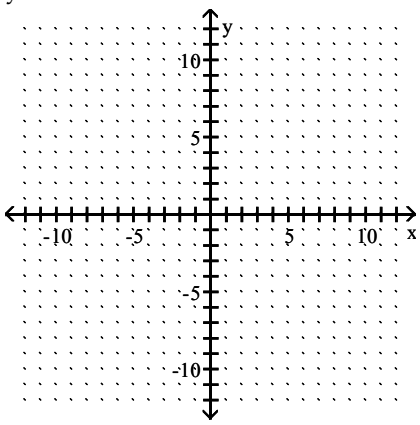

A)

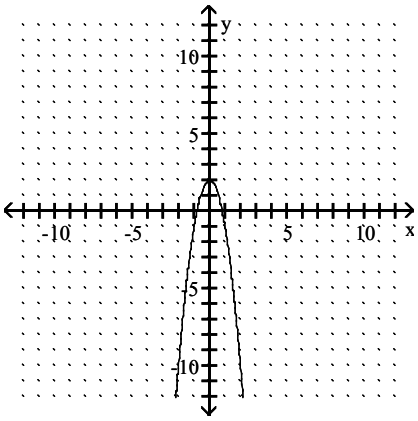

B)

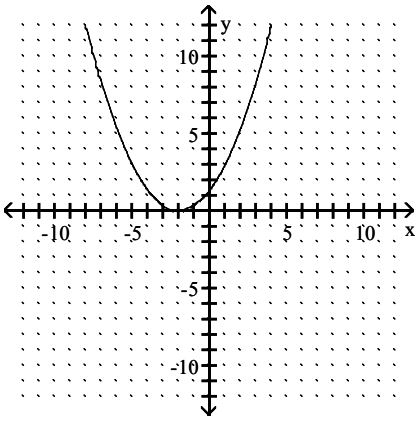

C)

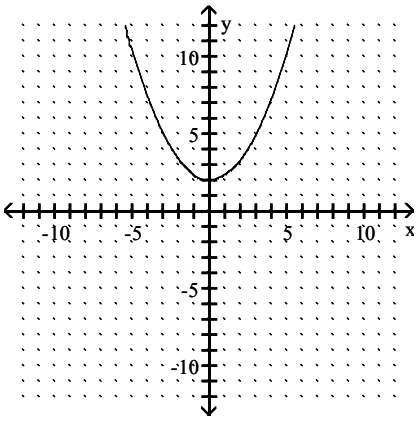

D)

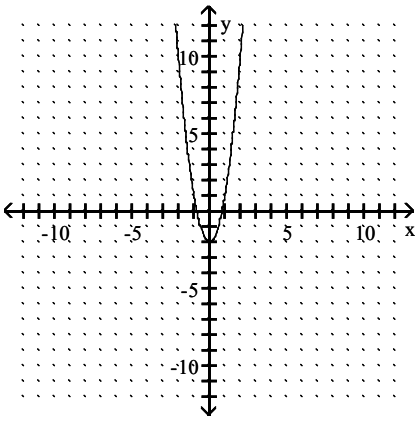

Answer: D

Trigonometry 5th edition Dugopolski Test Bank

117) $y = |1 - x|$

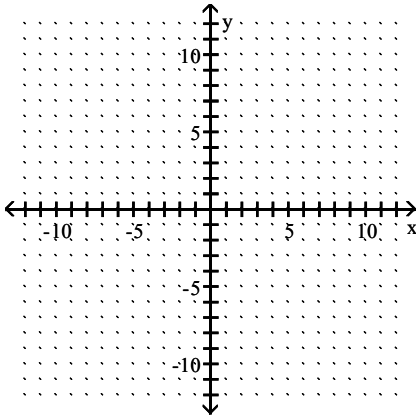

A)

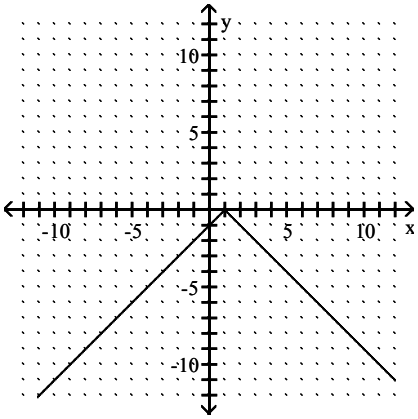

B)

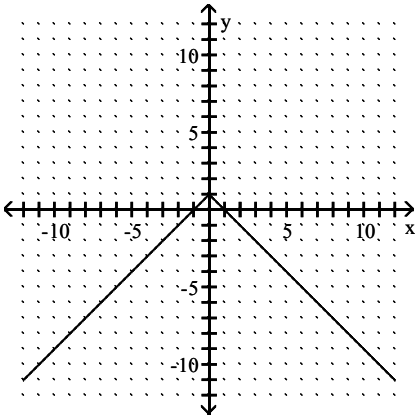

C)

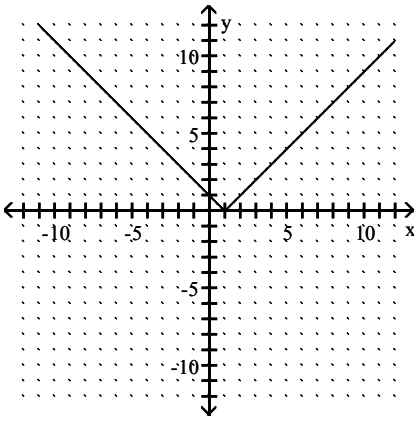

D)

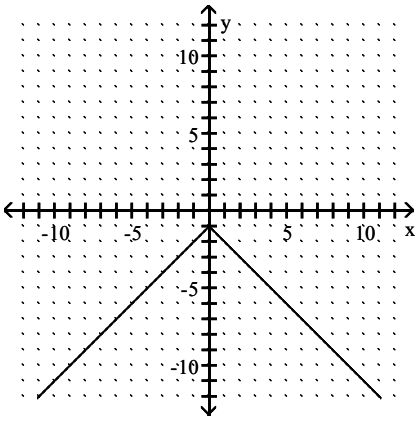

Answer: C

Trigonometry 5th edition Dugopolski Test Bank

118) $y = 9|x| - 9$

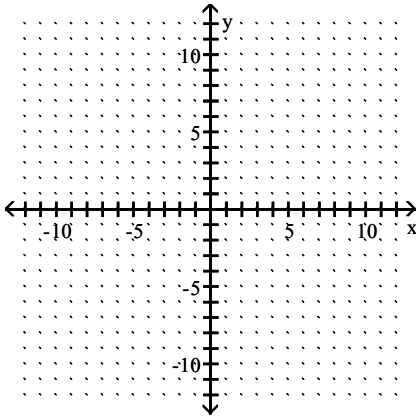

A)

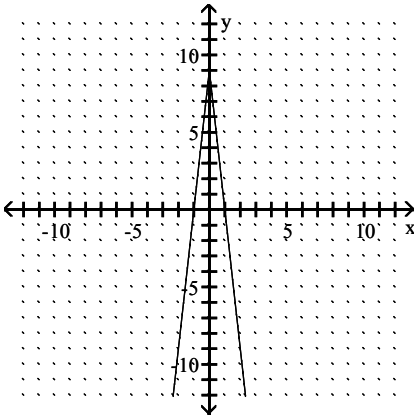

B)

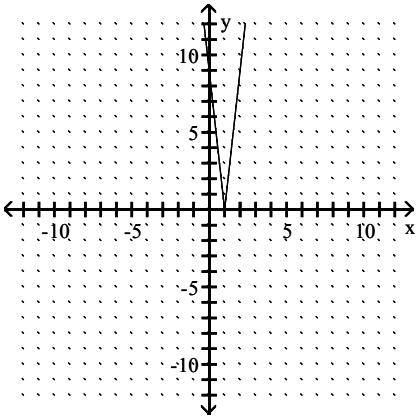

C)

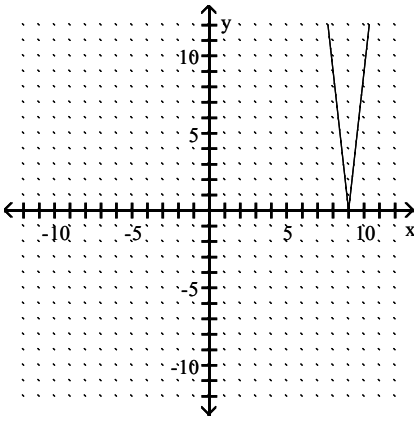

D)

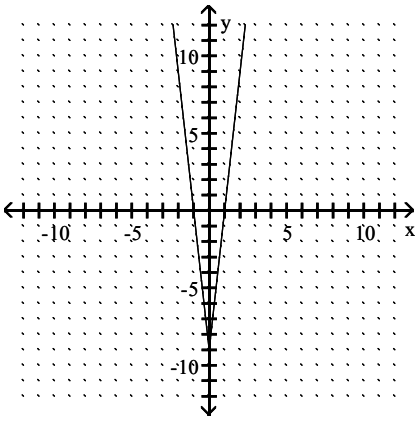

Answer: D

Trigonometry 5th edition Dugopolski Test Bank

119) $y = |x - 9| - 6$

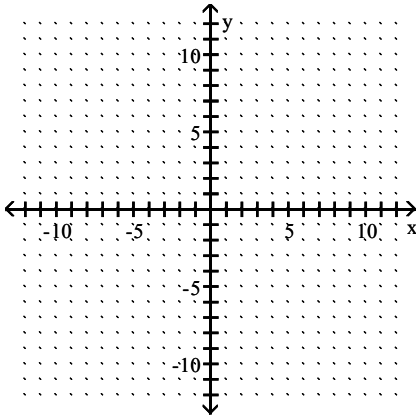

A)

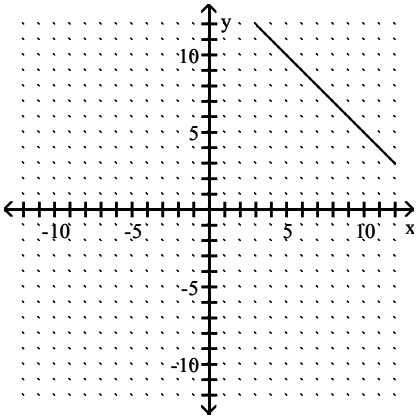

B)

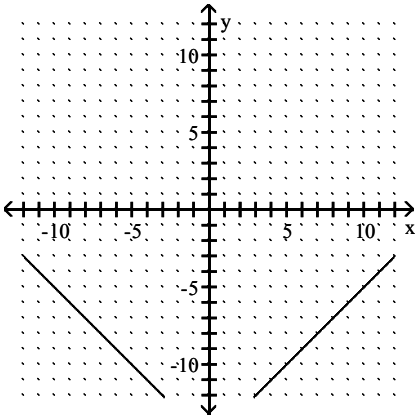

C)

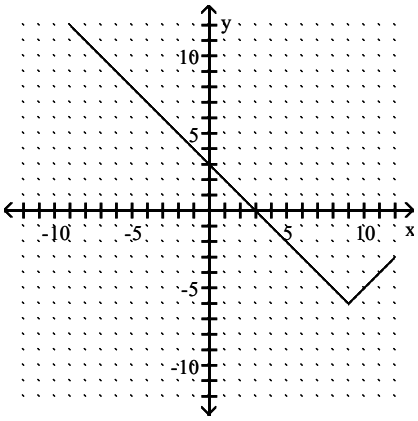

D)

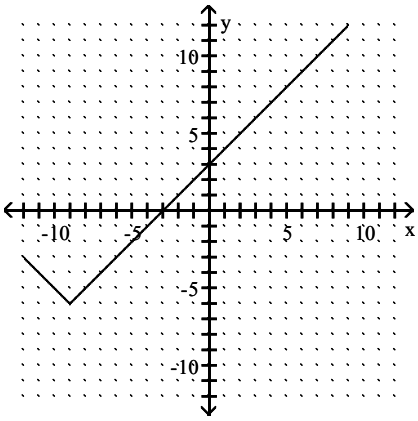

Answer: C

Trigonometry 5th edition Dugopolski Test Bank

120) $y = 4|x - 2| - 6$

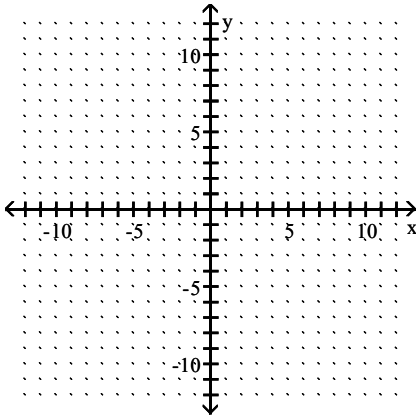

A)

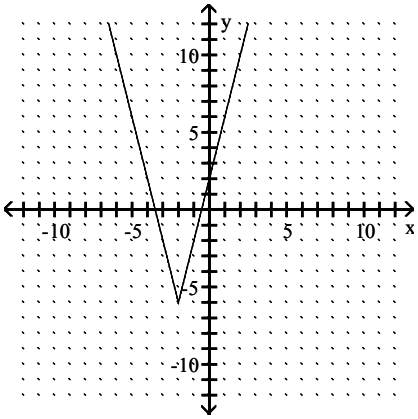

B)

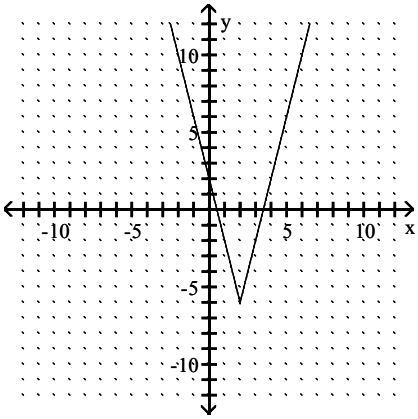

C)

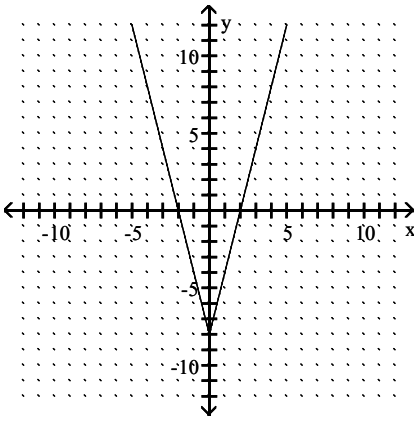

D)

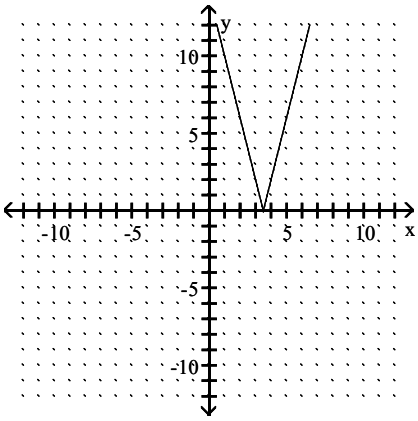

Answer: B

Trigonometry 5th edition Dugopolski Test Bank

121) $y = -\sqrt{x + 2} + 1$

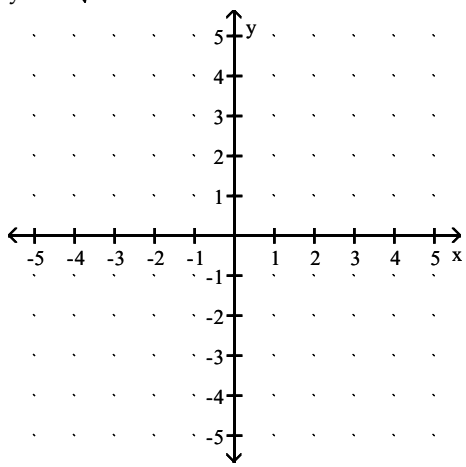

A)

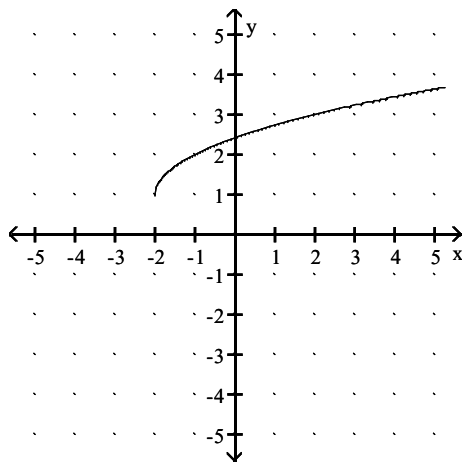

B)

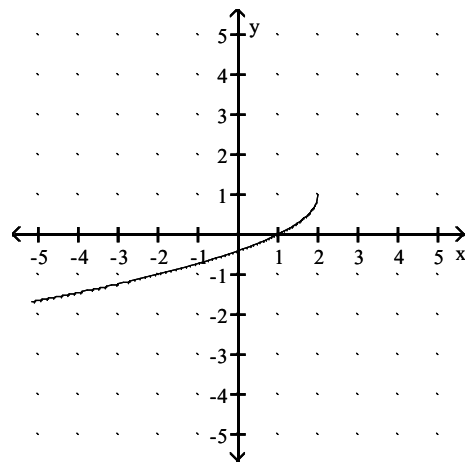

C)

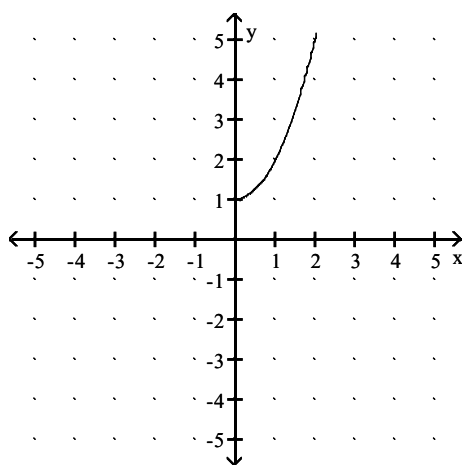

D)

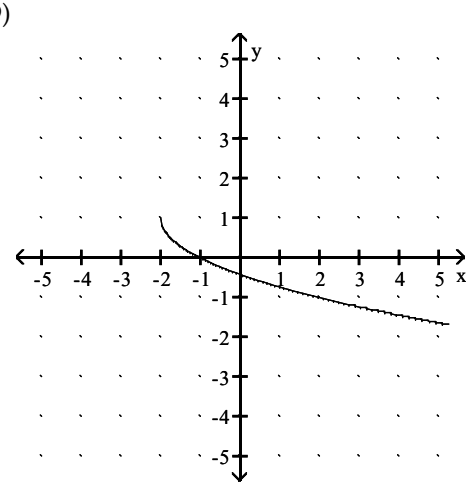

Answer: D

Determine whether the graph of the function is symmetric about the y–axis, the origin, or neither of these.

122) $f(x) = -5x^2 + 3$

A) y–axis B) Origin C) Neither

Answer: A

Trigonometry 5th edition Dugopolski Test Bank

123) $f(x) = |5x| + 2$

A) y–axis B) Origin C) Neither

Answer: A

124) $f(x) = 3x^3$

A) y–axis B) Origin C) Neither

Answer: B

125) $f(x) = 3x^2 - 2$

A) y–axis B) Origin C) Neither

Answer: A

126) $f(x) = -5x^3 + 7x$

A) y–axis B) Origin C) Neither

Answer: B

127) $f(x) = 2x^5 - 3x^3$

A) y–axis B) Origin C) Neither

Answer: B

128) $f(x) = 3x^4 + 5x + 5$

A) y–axis B) Origin C) Neither

Answer: C

129) $f(x) = |x + 9|$

A) y–axis B) Origin C) Neither

Answer: C

130) $f(x) = x + \frac{1}{x^4}$

A) y–axis B) Origin C) Neither

Answer: C

Determine whether the function is even, odd, or neither.

131) $f(x) = 4x^2 + 1$

A) Even B) Odd C) Neither

Answer: A

132) $f(x) = (x + 4)(x + 4)$

A) Even B) Odd C) Neither

Answer: C

133) $f(x) = -8x^3 + 3x$

A) Even B) Odd C) Neither

Answer: B

Trigonometry 5th edition Dugopolski Test Bank

134) $f(x) = 2x^5 - 2x^3$

A) Even B) Odd C) Neither

Answer: B

135) $f(x) = 8x^4 + 6x + 8$

A) Even B) Odd C) Neither

Answer: C

136) $f(x) = |x^2 + x|$

A) Even B) Odd C) Neither

Answer: C

137) $f(x) = x^3 - \frac{1}{x}$

A) Even B) Odd C) Neither

Answer: B

The graph of the given function is drawn with a solid line. The graph of a function, g(x), transformed from this one is drawn with a dashed line. Find a formula for g(x).

138) $f(x) = x^2$

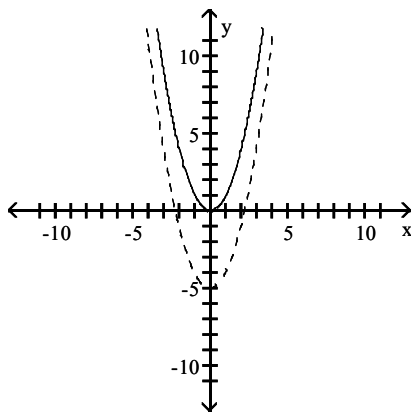

A) $g(x) = (x - 5)^2$ B) $g(x) = 5x^2$ C) $g(x) = x^2 - 5$ D) $g(x) = x^2 + 5$

Answer: C

139) $f(x) = |x|$

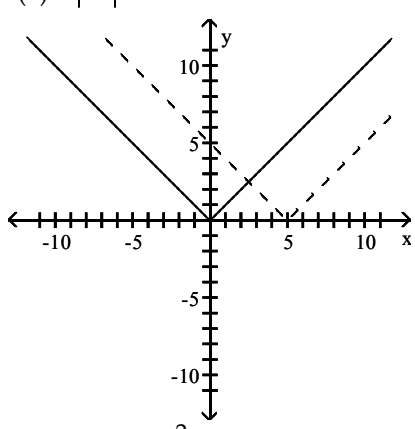

A) $g(x) = 5x^3$ B) $g(x) = |x| - 5$ C) $g(x) = |x - 5|$ D) $g(x) = |x + 5|$

Answer: C

Trigonometry 5th edition Dugopolski Test Bank

140) $f(x) = x^3$

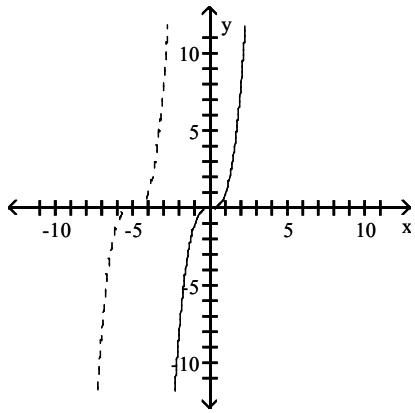

A) $g(x) = (x + 5)^3$ B) $g(x) = x^3 + 5$ C) $g(x) = 5x^3$ D) $g(x) = (x - 5)^3$

Answer: A

141) $f(x) = | x |$

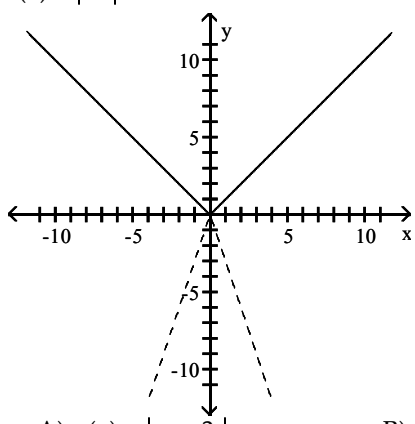

A) $g(x) = | x + 3 |$ B) $g(x) = | x | - 3$ C) $g(x) = -3| x |$ D) $g(x) = | x - 3 |$

Answer: C

142) $f(x) = x^2$

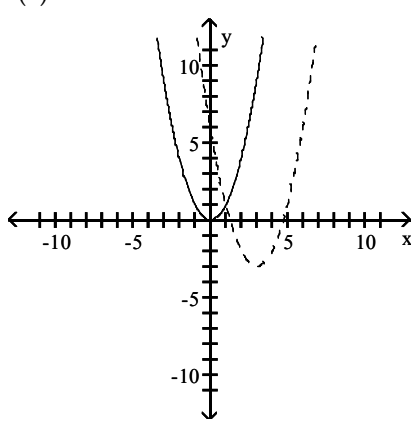

A) $g(x) = 2(x + 3)^2$ B) $g(x) = (x - 2)^2 - 3$ C) $g(x) = (x - 3)^2 - 3$ D) $g(x) = - 2(x - 3)^2$

Answer: C

Trigonometry 5th edition Dugopolski Test Bank

143) $f(x) = x^2$

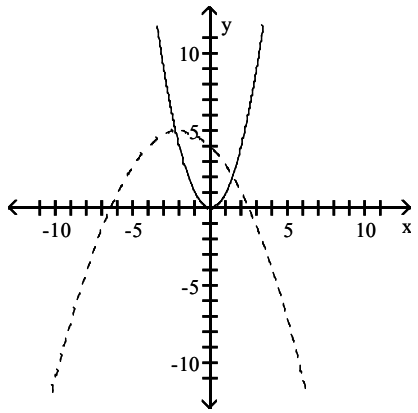

A) $g(x) = -\frac{1}{4}(x + 2)^2$

B) $g(x) = (x + 2)^2 + 5$

C) $g(x) = \frac{1}{4}(x - 2)^2 - 5$

D) $g(x) = -\frac{1}{4}(x + 2)^2 + 5$

Answer: D

144) $f(x) = \sqrt[3]{x}$

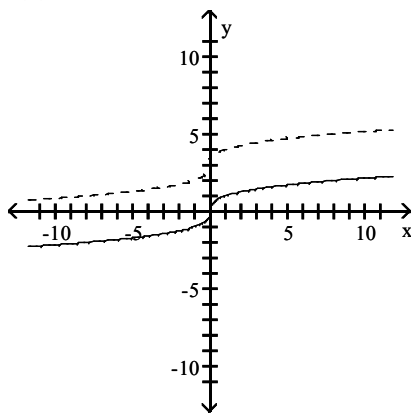

A) $g(x) = 3\sqrt[3]{x}$

B) $g(x) = \sqrt[3]{x + 3}$

C) $g(x) = \sqrt[3]{x - 3}$

D) $g(x) = \sqrt[3]{x} + 3$

Answer: D

Trigonometry 5th edition Dugopolski Test Bank

145) $f(x) = |x|$

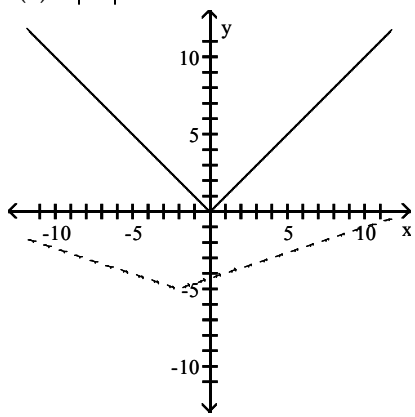

A) $g(x) = 0.33|x - 2| + 5$
B) $g(x) = 0.33|x + 2| - 5$
C) $g(x) = 5|x + 2| - 0.33$
D) $g(x) = 5|x - 2| + 0.33$

Answer: B

146) $f(x) = \sqrt[3]{x}$

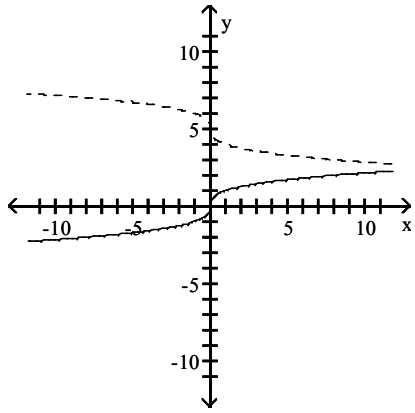

A) $g(x) = 5\sqrt[3]{-x}$
B) $g(x) = \sqrt[3]{-x} + 5$
C) $g(x) = \sqrt[3]{x}$
D) $g(x) = \sqrt[3]{x - 5}$

Answer: B

Solve the problem.

147) Each employee at Fandango Fashions is given an across–the–board raise of $5000. Write a function that transforms each old salary x into a new salary N(x).

A) $N(x) = x + 5000$
B) $N(x) = 5000x$
C) $N(x) = 5x + 1000$
D) $N(x) = 5000 - x$

Answer: A

148) Each bank teller at Bank4U is first given a 7% cost–of–living raise and then a $1650 merit raise. Write a function that transforms each old salary x into a new salary N(x). Does it make any difference in which order these raises are given? Explain.

A) $N(x) = 0.07x + 1650$; Yes, because 7% of the current salary, x, is less than 7% of the sum of $1650 and the current salary, $(1650 + x)$.
B) $N(x) = 1.07x + 1650$; Yes, because 7% of the current salary, x, is less than 7% of the sum of $1650 and the current salary, $(1650 + x)$.
C) $N(x) = 1.07(1650 + x)$; No, they would be the same amounts either way.
D) $N(x) = 0.07(1650 + x)$; Yes, because 7% of the current salary, x, is less than 7% of the sum of $1650 and the current salary, $(1650 + x)$.

Answer: B

Trigonometry 5th edition Dugopolski Test Bank

149) The Phillips curve shows the relationship between the unemployment rate x and the inflation rate y. If the equation of the curve is $y = 1 - \sqrt{x}$ for a certain third world country, then for approximately which value of x is the inflation rate 25%?

A) 25% B) 75% C) 50% D) 37.5%

Answer: C

150) A manufacturer of custom doors produces y doors per week using x hours of labor per week, where $y = 1.25\sqrt{x}$. How many hours of labor are required to keep production at 15 doors per week?

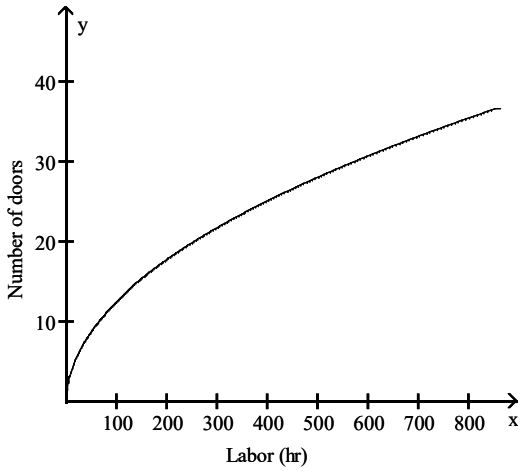

A) 264 hr B) 144 hr C) 352 hr D) 12 hr

Answer: B

Use the two given functions to write y as a function of x.

151) $y = -2t + 5$, $t = -6x - 4$

A) $y = -2x + 13$ B) $y = 12x + 1$ C) $y = 12x - 6$ D) $y = 12x + 13$

Answer: D

152) $y = 6m^2 + 7$, $m = x - 4$

A) $y = 6x^2 - 48x + 103$ B) $y = 6x^2 - 48x + 96$ C) $y = 6x^2 - 8x + 23$ D) $y = 6x^2 + 103$

Answer: A

Trigonometry 5th edition Dugopolski Test Bank

Find the requested function value.

153) Find g(f(23)) given $f(x) = \frac{x - 5}{3}$ and $g(x) = 5x + 3$.

A) $\frac{113}{3}$ B) 708 C) 33 D) 48

Answer: C

154) Find $(f \circ g)(-5)$ given $f(x) = -5x + 6$ and $g(x) = 3x^2 - 4x + 8$.

A) −23 B) 2,767 C) −509 D) −59

Answer: C

155) Find $(g \circ f)(-9)$ given $f(x) = -5x - 1$ and $g(x) = 9x^2 - 7x + 2$.

A) 79 B) −3,971 C) 90 D) 17,118

Answer: D

156) Find $(h \circ g \circ f)(-17)$ given $f(x) = \frac{x - 3}{5}$, $g(x) = 9 - x^2$, and $h(x) = |x - 9|$.

A) −16 B) −2 C) 16 D) −160

Answer: C

Find functions f and g so that F(x) = (f ∘ g) (x).

157) $F(x) = \frac{1}{x^2 - 5}$

A) $f(x) = \frac{1}{x^2}$, $g(x) = x - 5$

B) $f(x) = \frac{1}{x}$, $g(x) = x^2 - 5$

C) $f(x) = \frac{1}{5}$, $g(x) = x^2 - 5$

D) $f(x) = \frac{1}{x^2}$, $g(x) = -\frac{1}{5}$

Answer: B

158) $F(x) = |10x + 7|$

A) $f(x) = -|x|$, $g(x) = 10x + 7$

B) $f(x) = |-x|$, $g(x) = 10x - 7$

C) $f(x) = x$, $g(x) = 10x + 7$

D) $f(x) = |x|$, $g(x) = 10x + 7$

Answer: D

159) $F(x) = \frac{8}{x^2} + 3$

A) $f(x) = \frac{1}{x}$, $g(x) = \frac{8}{x} + 3$

B) $f(x) = x + 3$, $g(x) = \frac{8}{x^2}$

C) $f(x) = \frac{8}{x^2}$, $g(x) = 3$

D) $f(x) = x$, $g(x) = \frac{8}{x} + 3$

Answer: B

Trigonometry 5th edition Dugopolski Test Bank

160) $F(x) = \frac{2}{\sqrt{9x + 8}}$

A) $f(x) = \frac{2}{x}$, $g(x) = 9x + 8$

B) $f(x) = 2$, $g(x) = \sqrt{9 + 8}$

C) $f(x) = \frac{2}{\sqrt{x}}$, $g(x) = 9x + 8$

D) $f(x) = \sqrt{9x + 8}$, $g(x) = 2$

Answer: C

161) $F(x) = (-4x + 2)^4$

A) $f(x) = -4x^4$, $g(x) = x + 2$

B) $f(x) = (-4x)^4$, $g(x) = 2$

C) $f(x) = -4x + 2$, $g(x) = x^4$

D) $f(x) = x^4$, $g(x) = -4x + 2$

Answer: D

162) $F(x) = \sqrt{81x^2 + 24}$

A) $f(x) = \sqrt{81x + 24}$, $g(x) = x^2$

B) $f(x) = \sqrt{81x^2}$, $g(x) = \sqrt{24}$

C) $f(x) = \sqrt{x}$, $g(x) = 81x^2 + 24$

D) $f(x) = 81x^2 + 24$, $g(x) = \sqrt{x}$

Answer: C

Find the inverse of the function.

163) $f(x) = 6x + 3$

A) $f^{-1}(x) = \frac{x}{6} - 3$

B) $f^{-1}(x) = \frac{x + 3}{6}$

C) $f^{-1}(x) = \frac{x - 3}{6}$

D) Not invertible

Answer: C

164) $f(x) = -7 - 3x$

A) $f^{-1}(x) = -4 - x$

B) $f^{-1}(x) = -\frac{7}{3} + \frac{x}{3}$

C) $f^{-1}(x) = \frac{7}{3} - \frac{x}{3}$

D) $f^{-1}(x) = -\frac{7}{3} - \frac{x}{3}$

Answer: D

165) $f(x) = \frac{x}{4} - 4$

A) $f^{-1}(x) = 4x - 16$

B) $f^{-1}(x) = 4x + 4$

C) $f^{-1}(x) = x + 8$

D) $f^{-1}(x) = 4x + 16$

Answer: D

166) $f(x) = x^2 - 10, x \geq 0$

A) $f^{-1}(x) = \sqrt{x - 10}$

B) $f^{-1}(x) = x^2 + 10$

C) $f^{-1}(x) = \sqrt{x^2 + 10}$

D) $f^{-1}(x) = \sqrt{x + 10}$

Answer: D

167) $f(x) = x^2 - 4, x \leq 0$

A) $f^{-1}(x) = \sqrt{x + 4}$

B) $f^{-1}(x) = -\sqrt{x + 4}$

C) $f^{-1}(x) = -\sqrt{x^2 + 4}$

D) $f^{-1}(x) = x^2 + 4$

Answer: A

168) $f(x) = -x^2 + 17, x \geq 0$

A) $f^{-1}(x) = \sqrt{17 - x}$

B) $f^{-1}(x) = x^2 + 17$

C) $f^{-1}(x) = \sqrt{x + 17}$

D) $f^{-1}(x) = -\sqrt{x^2 + 17}$

Answer: A

Trigonometry 5th edition Dugopolski Test Bank

169) $f(x) = (x - 19)^2, x \geq 19$

A) $f^{-1}(x) = x^2 + 19$ B) $f^{-1}(x) = \sqrt{x + 19}$ C) $f^{-1}(x) = \sqrt{x} + 19$ D) $f^{-1}(x) = -\sqrt{x^2 + 19}$

Answer: C

170) $f(x) = (x - 19)^2 + 1, x \geq 19$

A) $f^{-1}(x) = 1x^2 + 19$ B) $f^{-1}(x) = \sqrt{x - 1} + 19$ C) $f^{-1}(x) = \sqrt{x + 19} - 1$ D) $f^{-1}(x) = \sqrt{x + 1} - 19$

Answer: B

171) $f(x) = (x + 16)^2 - 3, x \geq -16$

A) $f^{-1}(x) = \sqrt{x + 3} - 16$ B) $f^{-1}(x) = \sqrt{x - 3} + 16$ C) $f^{-1}(x) = 3x^2 + 16$ D) $f^{-1}(x) = \sqrt{x + 16} + 3$

Answer: A

172) $f(x) = x^4 + 5, x \geq 0$

A) $f^{-1}(x) = \sqrt[4]{x - 10}$ B) $f^{-1}(x) = \sqrt[4]{x + 5}$ C) $f^{-1}(x) = \sqrt[4]{x - 5}$ D) Not invertible

Answer: C

Decide whether or not the functions are inverses of each other.

173) $f(x) = -\frac{1}{3}x, \ g(x) = -3x$

A) No B) Yes

Answer: B

174) $f(x) = 2x - 8, \ g(x) = \frac{x + 2}{8}$

A) No B) Yes

Answer: A

175) $f(x) = 7x - 7, \ g(x) = \frac{1}{7}x + 1$

A) No B) Yes

Answer: B

176) $f(x) = \frac{2}{x + 4}, \ g(x) = \frac{4x + 2}{x}$

A) No B) Yes

Answer: A

177) $f(x) = 2x + 4, \ g(x) = \frac{1}{2}x - 2$

A) No B) Yes

Answer: B

178) $f(x) = \sqrt{5 - x}, \ g(x) = 5 - x^2$

A) Yes B) No

Answer: A

Trigonometry 5th edition Dugopolski Test Bank

179) $f(x) = \sqrt[3]{2x - 1}$, $g(x) = \dfrac{x^3 + 1}{2}$

A) Yes B) No

Answer: A

Find the inverse of the function.

180) $f(x) = x^3 + 5$

A) $f^{-1}(x) = \sqrt[3]{x - 5}$ B) $f^{-1}(x) = \sqrt[3]{x} - 5$ C) $f^{-1}(x) = \sqrt[3]{x + 5}$ D) Not invertible

Answer: A

181) $f(x) = 7x^3 - 3$

A) $f^{-1}(x) = \sqrt[3]{\dfrac{x - 3}{7}}$ B) $f^{-1}(x) = \sqrt[3]{\dfrac{x}{7}} + 3$ C) $f^{-1}(x) = \sqrt[3]{\dfrac{x + 3}{7}}$ D) Not invertible

Answer: C

182) $f(x) = \sqrt{x + 6}$ for $x \geq -6$

A) $f^{-1}(x) = -x^2 + 6$ B) $f^{-1}(x) = x^2 - 6$ C) $f^{-1}(x) = x^2 - 36$ D) Not invertible

Answer: B

183) $f(x) = \sqrt{x} - 4$ for $x \geq 0$

A) $f^{-1}(x) = -(x + 4)^2$ B) $f^{-1}(x) = (x + 4)^2$ C) $f^{-1}(x) = x + 4$ D) $f^{-1}(x) = (x - 4)^2$

Answer: B

184) $f(x) = \sqrt{x - 5}$ for $x \geq 5$

A) $f^{-1}(x) = x^2 + 5$ B) $f^{-1}(x) = x + 5$ C) $f^{-1}(x) = x^2 - 5$ D) Not invertible

Answer: A

185) $f(x) = \dfrac{7}{x - 7}$

A) $f^{-1}(x) = \dfrac{x}{-7 + 7x}$ B) $f^{-1}(x) = \dfrac{-7 + 7x}{x}$ C) $f^{-1}(x) = \dfrac{7x + 7}{x}$ D) Not invertible

Answer: C

186) $f(x) = \dfrac{-9x + 9}{-9x - 8}$

A) $f^{-1}(x) = \dfrac{8x + 9}{-9x + 9}$ B) $f^{-1}(x) = \dfrac{-9x + 9}{8x + 9}$ C) $f^{-1}(x) = \dfrac{-9x + 9}{-9x - 8}$ D) Not invertible

Answer: A

187) $f(x) = \sqrt{7x + 8}$

A) $f^{-1}(x) = \dfrac{2x - 8}{7}$ B) $f^{-1}(x) = \dfrac{(x - 8)^2}{7}$ for $x \geq 0$

C) $f^{-1}(x) = \dfrac{x^2 - 8}{7}$ for $x \geq 0$ D) $f^{-1}(x) = \dfrac{x^2}{7} - 8$ for $x \geq 0$

Answer: C

Trigonometry 5th edition Dugopolski Test Bank

188) $f(x) = \sqrt[3]{\frac{x}{4}} - 4$

A) $f^{-1}(x) = 4(x + 4)^3$ B) $f^{-1}(x) = 12(x + 4)$ C) $f^{-1}(x) = [4(x + 4)]^3$ D) $f^{-1}(x) = 4(x^3 + 4)$

Answer: A

The graph of a function f is given. On the same axes, sketch the graph of f^{-1}.

189)

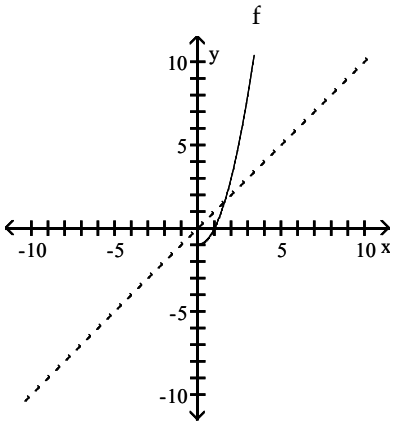

A)

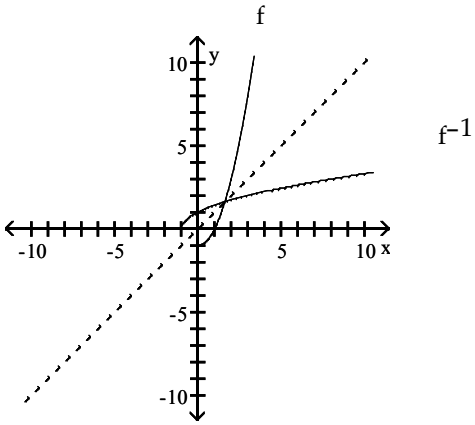

B)

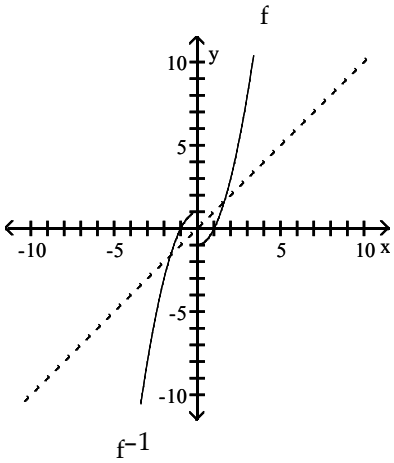

C)

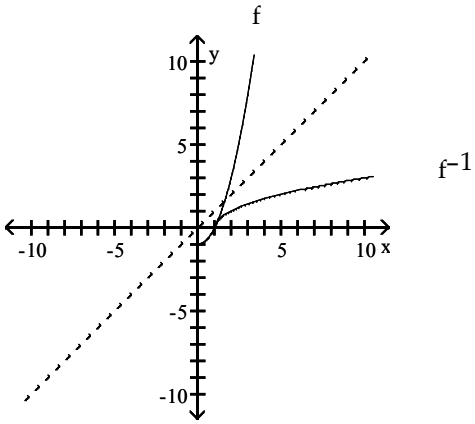

D)

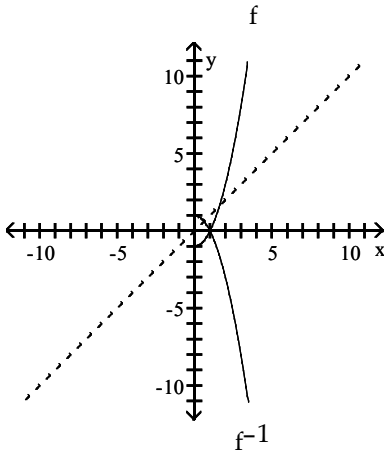

Answer: A

Trigonometry 5th edition Dugopolski Test Bank

190)

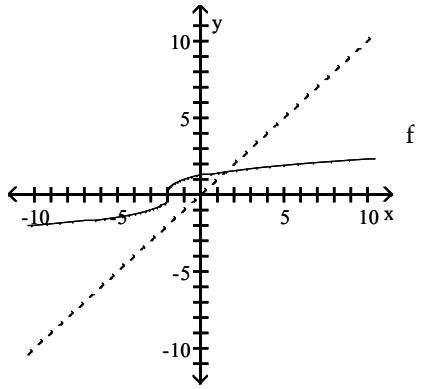

A)

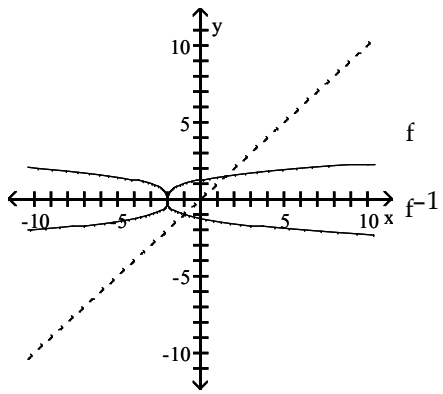

B)

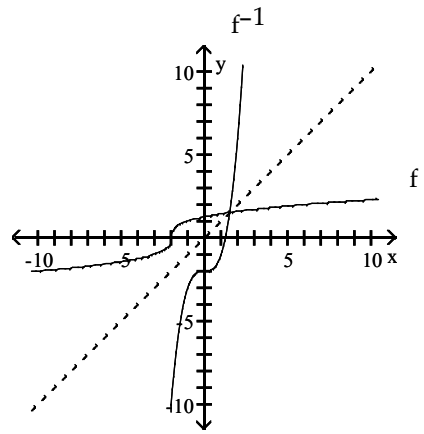

C)

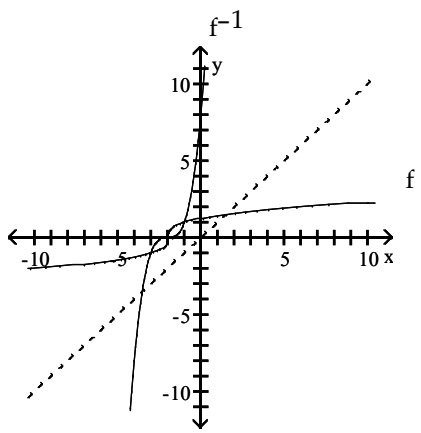

D)

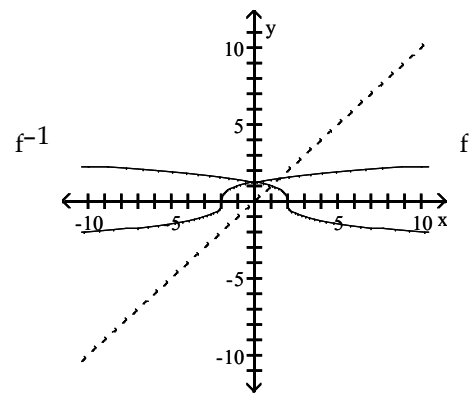

Answer: B

Find the inverse using composition.

191) $f(x) = 4x - 5$

A) $f^{-1}(x) = \frac{x}{4} + 5$ B) $f^{-1}(x) = \frac{x - 5}{4}$ C) $f^{-1}(x) = \frac{x + 5}{4}$ D) Not invertible

Answer: C

Trigonometry 5th edition Dugopolski Test Bank

192) $f(x) = -1 - 6x$

A) $f^{-1}(x) = -\frac{1}{6} + \frac{x}{6}$ B) $f^{-1}(x) = 5 - x$ C) $f^{-1}(x) = \frac{1}{6} - \frac{x}{6}$ D) $f^{-1}(x) = -\frac{1}{6} - \frac{x}{6}$

Answer: D

193) $f(x) = \frac{x}{3} - 5$

A) $f^{-1}(x) = 3x + 15$ B) $f^{-1}(x) = 3x - 15$ C) $f^{-1}(x) = x + 8$ D) $f^{-1}(x) = 3x + 5$

Answer: A

194) $f(x) = x^2 - 16, x \geq 0$

A) $f^{-1}(x) = \sqrt{x^2 + 16}$ B) $f^{-1}(x) = \sqrt{x + 16}$ C) $f^{-1}(x) = x^2 + 16$ D) $f^{-1}(x) = \sqrt{x - 16}$

Answer: B

195) $f(x) = x^2 - 6, x \leq 0$

A) $f^{-1}(x) = x^2 + 6$ B) $f^{-1}(x) = -\sqrt{x^2 + 6}$ C) $f^{-1}(x) = -\sqrt{x + 6}$ D) $f^{-1}(x) = \sqrt{x + 6}$

Answer: D

196) $f(x) = -x^2 + 20, x \geq 0$

A) $f^{-1}(x) = \sqrt{x + 20}$ B) $f^{-1}(x) = \sqrt{20 - x}$ C) $f^{-1}(x) = x^2 + 20$ D) $f^{-1}(x) = -\sqrt{x^2 + 20}$

Answer: B

197) $f(x) = (x - 20)^2, x \geq 20$

A) $f^{-1}(x) = \sqrt{x + 20}$ B) $f^{-1}(x) = x^2 + 20$ C) $f^{-1}(x) = -\sqrt{x^2 + 20}$ D) $f^{-1}(x) = \sqrt{x} + 20$

Answer: D

198) $f(x) = (x - 2)^2 + 3, x \geq 2$

A) $f^{-1}(x) = 3x^2 + 2$ B) $f^{-1}(x) = \sqrt{x + 3} - 2$ C) $f^{-1}(x) = \sqrt{x + 2} - 3$ D) $f^{-1}(x) = \sqrt{x - 3} + 2$

Answer: D

199) $f(x) = (x + 17)^2 - 2, x \geq -17$

A) $f^{-1}(x) = 2x^2 + 17$ B) $f^{-1}(x) = \sqrt{x - 2} + 17$ C) $f^{-1}(x) = \sqrt{x + 17} + 2$ D) $f^{-1}(x) = \sqrt{x + 2} - 17$

Answer: D

200) $f(x) = x^4 + 4, x \geq 0$

A) $f^{-1}(x) = \sqrt[4]{x - 8}$ B) $f^{-1}(x) = \sqrt[4]{x - 4}$ C) $f^{-1}(x) = \sqrt[4]{x + 4}$ D) Not invertible

Answer: B

Find a formula for the inverse of the function described below.

201) A size–12 dress in Country C is size 48 in Country D. A function that converts dress sizes in Country C to those in Country D is $f(x) = x + 36$.

A) $f^{-1}(x) = \frac{x}{36}$ B) $f^{-1}(x) = x + 36$ C) $f^{-1}(x) = \frac{x}{-36}$ D) $f^{-1}(x) = x - 36$

Answer: D

Trigonometry 5th edition Dugopolski Test Bank

202) A size–6 dress in Country C is size 44 in Country D. A function that converts dress sizes in Country C to those in Country D is $f(x) = 2(x + 16)$.

A) $f^{-1}(x) = x - 16$ B) $f^{-1}(x) = \frac{x}{2} + 16$ C) $f^{-1}(x) = \frac{x - 16}{2}$ D) $f^{-1}(x) = \frac{x}{2} - 16$

Answer: D

203) 32° Fahrenheit = 0° Celsius. A function that converts temperatures in Fahrenheit to those in Celsius is $f(x) = \frac{5}{9}(x - 32)$.

A) $f^{-1}(x) = \frac{5}{9}(x - 32)$ B) $f^{-1}(x) = \frac{9}{5}x - 32$ C) $f^{-1}(x) = \frac{9}{5}x + 32$ D) $f^{-1}(x) = x + 32$

Answer: C

204) An organization determines that the cost per person of chartering a bus is given by the formula

$$C(x) = \frac{200 + 3x}{x},$$

where x is the number of people in the group, and C(x) is in dollars.

A) $C^{-1}(x) = \frac{3}{x - 200}$ B) $C^{-1}(x) = \frac{200 + x}{3}$ C) $C^{-1}(x) = \frac{200}{x + 3}$ D) $C^{-1}(x) = \frac{200}{x - 3}$

Answer: D

Trigonometry 5th edition Dugopolski Test Bank

Answer Key
Testname: UNTITLED1

1) B
2) B
3) D
4) B
5) A
6) B
7) C
8) D
9) D
10) D
11) A
12) A
13) B
14) D
15) B
16) D
17) A
18) C
19) B
20) B
21) C
22) B
23) A
24) D
25) B
26) C
27) C
28) B
29) D
30) C
31) B
32) D
33) A
34) C
35) D
36) C
37) C
38) D
39) B
40) D
41) A
42) C
43) B
44) B
45) B
46) A
47) D
48) D
49) B
50) A

Trigonometry 5th edition Dugopolski Test Bank

51) C
52) B
53) D
54) D
55) B
56) D
57) C
58) D
59) C
60) D
61) B
62) B
63) C
64) A
65) A
66) A
67) B
68) C
69) D
70) B
71) A
72) B
73) C
74) B
75) A
76) B
77) C
78) A
79) C
80) D
81) C
82) A
83) C
84) D
85) D
86) D
87) B
88) C
89) C
90) B
91) B
92) B
93) B
94) D
95) B
96) C
97) B
98) A
99) D
100) C

Trigonometry 5th edition Dugopolski Test Bank

101) B
102) A
103) A
104) B
105) A
106) D
107) C
108) A
109) C
110) D
111) A
112) D
113) A
114) D
115) B
116) D
117) C
118) D
119) C
120) B
121) D
122) A
123) A
124) B
125) A
126) B
127) B
128) C
129) C
130) C
131) A
132) C
133) B
134) B
135) C
136) C
137) B
138) C
139) C
140) A
141) C
142) C
143) D
144) D
145) B
146) B
147) A
148) B
149) C
150) B

Trigonometry 5th edition Dugopolski Test Bank

151) D
152) A
153) C
154) C
155) D
156) C
157) B
158) D
159) B
160) C
161) D
162) C
163) C
164) D
165) D
166) D
167) A
168) A
169) C
170) B
171) A
172) C
173) B
174) A
175) B
176) A
177) B
178) A
179) A
180) A
181) C
182) B
183) B
184) A
185) C
186) A
187) C
188) A
189) A
190) B
191) C
192) D
193) A
194) B
195) D
196) B
197) D
198) D
199) D
200) B

Trigonometry 5th edition Dugopolski Test Bank

201) D
202) D
203) C
204) D

Trigonometry 5th edition Dugopolski Test Bank