Elements of Power Electronics 2nd edition Krein Solutions Manual

SKU: 9780199388417-SOLUTIONS

Problem 1.1

List five products you own that require electrical energy conversion.

Typical examples:

- Microwave oven
- Television
- Stereo
- Compact fluorescent lights
- Solid-state lights
- Lamps and fixtures with dimmers
- Personal computer
- Telephone with memory features
- Cordless phones
- Mobile phones
- Cordless power tools
- Clock radio
- Automobiles, conventional as well as hybrid or electric
- Wifi access point or cable modem
- DVR
- Printer
- Wireless speakers
- Computer backup power unit
- Most types of electronic medical devices
- Ac adapters or battery chargers for personal audio devices, pad computers and tablets, CD/DVD players, laptop computers, electric razors, and other small electronic products.

Items that sometimes include electrical conversion (typical of relatively new devices with extra features):

- Washer
- Dryer
- Dishwasher
- Refrigerator
- Air conditioner
- Small motorized kitchen appliances
- Ceiling fans

Items unlikely to include conversion:

- Toasters
- Direct heating appliances without electronic displays or controls
- Battery or line-driven electromechanical clocks

Problem 1.2

Typical examples (not including loudspeakers, which themselves are motors):

- Refrigerator compressor
- Refrigerator ventilation fan
- DVR hard disk drive
- Kitchen fan
- Bathroom fan
- Furnace fan
- Air conditioner compressor
- Electric razor
- Hair dryer blower
- Electric wall clock
- Blender
- Washing machine drive motor
- Washing machine drain pump
- Dryer drum motor
- Sump pump
- Wall lamp timer
- CD or DVD player spindle
- CD or DVD player laser servo
- Printer (typically multiple motors)
- PC fan
- Hard disk spindle
- Hard disk head servo
- Electric train
- Radio-controlled car or aircraft
- Garbage disposer
- Electric hand drill
- Electric screwdriver
- Electric can opener
- Microwave turntable
- Oven rotisserie
- Sewing machine
- Electric trimmer
- Vacuum cleaner
- Food processor
- Electric mixer
- Dishwasher
- Window fan
- Ceiling fan
- Power tools

Problem 1.3

Explain why rectifiers and inverters are essential components in electric power systems.

Nearly all electronic circuits and devices ultimately operate from a dc voltage source, although at a wide variety of voltage levels. Many other products and devices use an intermediate dc voltage since they are not as effective directly from a mains frequency (50 Hz or 60 Hz) ac voltage. On the other hand, generation and distribution of bulk electrical energy benefit from the use of ac at moderate frequencies. This is because highly efficient rotating generators, so far the best technology to produce electricity, work best when designed to deliver sinusoidal outputs. In electrical distribution, the current zero crossings linked to ac voltage facilitate circuit interruption and fault protection.

On the load side, examples of devices that ultimately require dc include computers, communication circuits and devices, any device that interfaces with batteries, and almost any electronic circuits. Examples of devices that can operate better when the input is not mains frequency include fluorescent lamps (which flicker when operated at mains frequency and work more effectively at higher frequencies) and most types of motorized devices (which can benefit from frequency control to provide speed control). Dc interfaces are also needed for inherent dc sources that include photovoltaic panels and fuel cells, while variable ac interfaces are needed for wind generators or other rotating generators intended to work over a wide speed range.

Since both ac and dc sources and circuits are important in electric power systems, rectifiers (which transfer energy from ac sources to dc loads) and inverters (which transfer energy from dc sources to ac loads) are essential to modern power systems. Controlled inverters provide adjustable frequency to ac loads that benefit from variable input or control grid delivery from renewable sources. Controlled rectifiers can manage battery charging or manage the operation of solid-state lamps. At the highest levels, where high-voltage dc transmission has advantages, large rectifier and inverter sets (or in some cases bidirectional sets) are installed at each end of a line. Rectifiers are very common – in a typical setting most of the electricity entering a facility is delivered to rectifiers – and inverters are increasingly common.

Problem 1.4 - Rectifier Applications

A sampling:

- Electronic circuits
- Battery charging
- Welding
- Electric smelting
- DC motor drives
- Energy storage in capacitors and inductors
- Magnetic field generation
- AC generator excitation
- Telephone circuits
- Process control equipment
- High-voltage dc (HVDC) transmission
- Electrostatic processes
- Small motors
- Magnetic resonance imaging equipment
- General purpose power supplies
- Hydrolysis
- Electrochemical processing
- Electric locomotives and ships
- DC distribution systems in aircraft, automobiles, and aerospace
- Front-ends for equipment configured to produce variable-frequency ac output

Nearly all can benefit from control to match the requirements of loads or perhaps to correct for changes at input or output. In many cases (such as battery charging, dc motor drives, energy storage control, HVDC, and industrial processes, control is essential because the load requirements are not constant.

Problem 1.5 – Dc-dc converter applications

A sampling:

- Power management in mobile phones
- Power management in laptop computers and other portable computing and communication devices
- Power distribution inside desktop computers and workstations
- Power distribution in large data centers
- Point-of-load dc-dc converters for microprocessors and other low-voltage digital electronics
- Controls in solid-state lamps
- Dc motor controls and drives
- Battery charging
- Energy storage in capacitors and inductors
- Magnetic field generation
- Telephone circuits
- Process control equipment
- Electrostatic processes
- Magnetic resonance imaging equipment
- General purpose power supplies with passive front ends and active dc-dc stages (most modern designs)
- Electric transportation battery and bus interface circuits
- Dc distribution systems in aircraft, automobiles, and aerospace
- Regulation stages for renewable resources
- Circuits based on active rectifiers for a wide range of applications
- Medical devices
- Power for sensors
- Support requirements such as isolated supplies, auxiliary voltages, or local power needs
- Interfaces between renewable resources and batteries or dc distribution points

As in rectifiers, in many cases (such as battery charging, dc motor drives, energy storage control, HVDC, and industrial processes), control is essential because of load characteristics. Control is increasing important in high-performance applications such as portable communication devices and low-voltage digital electronics to support the best possible us of energy.

Problem 1.6 – Explain why power electronics is an essential enabler for renewable energy systems

With few exceptions (large-scale hydroelectric power is one), renewable resources do not lend themselves well to fixed-frequency ac mains electricity. To produce constant frequency, the conventional technology is a fixed-speed rotating machine. For hydroelectric power, it is possible to impose pressure on a water turbine and impose torque at a defined and known speed. For other situations, this is difficult. Wave energy generators, for instance, follow the slow, steady motion of ocean waves. Photovoltaic panels deliver dc over a range of voltages. Wind turbines work best when matched in specific ways to wind speed, so variability is inherent to their operation. Fuel cells have a wide voltage range and cannot be treated as fixed dc sources. Even in cases in which external combustion is used to run a turbine, and in microturbines, devices can be made small and less expensive if speeds are high.

This discussion means that nearly all renewable resources lack the ability to interface directly with the electricity grid. Even when a renewable resource is to be used in an unconventional way, without a grid, limits on control and high variability mean a resource probably does not function as a fixed voltage (or current). Many types of loads do not tolerate high variability. Power electronics provides the necessary interface and control capability to allow renewable resources to connect to the electricity grid or to deliver acceptable electricity for end use.

Problem 1.7

Total power - 10 GW
30% of this, or 3 GW, goes to fluorescent lighting.

If the new converter gains full market penetration, this can be reduced by 40%, or 1.2 GW.

At \$0.10/kWh, since 1.2 GW is 1.2×10^9 W or 1.2×10^6 kW, the savings would be \$120,000 per hour.

Over a year, this amounts to (24 h)(365days)(\$120,000/h)=\$1,051,000,000, more than a billion dollars per year in energy costs.

Problem 1.8

Total power - 10 GW
30% of this, or 3 GW, goes to fluorescent lighting.

If solid-state lighting technology can reduce this by 40%, the impact is 1.8 GW.

At \$0.10/kWh, since 1.8 GW is 1.8×10^9 W or 1.8×10^6 kW, the savings would be \$180,000 per hour.

Over a year, this amounts to (24 h)(365days)(\$180,000/h)=\$1,576,800,000. Customers could invest
up to about \$1.5 billion and recoup the investment within one year. Even if one million customers
are involved, an average investment of \$1500 each would be recovered.

Compared to the \$1,051,000,000 saved in Problem 1.7, the extra is \$525,800,000 saved per year. As solid-state lamps continue to improve, economic arguments to replace older lamps with them become
more and more compelling.

Problem 1.9

Bulk energy transport is generally most effective in the form of electricity. Consider this scenario: Wind energy in a certain region can produce energy at a rate of about 10 GW. It is desired to transport this energy 1000 km to population centers. High-voltage dc transmission lines rated at up to 1 MV and up to 5000 A can be built for this purpose. Or the energy can be converted to liquid hydrogen (the conversion is about 50% efficient), delivered by truck, and then converted into useful form with fuel cells (also about 50% efficient). Large tank trucks hold 35000 L, and liquid hydrogen stores about 10.1 MJ/L of energy as a fuel.

a) How many transmission lines will be needed for this? How much energy is delivered to the end point per hour if overall there is 4% loss?

b) How many trucks will be needed per hour to ship the hydrogen from the wind region to the points of use? Assuming that the fuel energy required by a truck is about 20 MJ/km, how much useful energy will be available per hour at the end point?

The input is 10 GW or 10^{10} J/s.

a) Electricity. Each line can carry 10^6 V x 5000 A = 5 x 10^9 W. Two lines will be needed to carry 10 GW. If the loss is 4%, the power reaching the end point will be 9.6 GW. With 3600 s/h, this delivery is 3.46 x 10^{13} J/h.

b) Convert to hydrogen. Half the energy will be lost in this process, so the input ready for trucks is 5 GW. Each truck carries 35000 L with energy content of 10.1 MJ/L. This means each truck has capacity of 35000 L x 10.1 MJ/L = 3.535 x 10^{11} J. To transport 5 x 10^9 J/s, an empty truck must be filled every 70.7 s. Almost one truck per minute will need to be filled at the facility to maintain the rate. This is 51 trucks per hour.

Each truck consumes 20 MJ/km, so the 1000 km journey will consume 2 x 10^{10} J. This means that on arrival at the end point, each truck has 3.535 x 10^{11} J – 2 x 10^{10} J = 3.335 x 10^{11} J to deliver. Now it will be consumed in fuel cells to produce electricity, and 50% will be lost in this process. Each truckload provides 1.67 x 10^{11} J. The power is 1.67 x 10^{11} J/70.7 s as trucks arrive, equivalent to 2.36 GW or 8.49 x 10^{12} J/h. Compare to 3.46 x 10^{13} J/h from part (a).

Problem 1.10

A delayed rectifier, with the switch turning on when the input voltage is equal to its peak value, divided by a parameter, k.

We can use the inverse cosine or inverse sine to represent the turn-on point. Inverse cosine gives trouble because of the quadrants, so let us set up the problem based on sine.

$Vpeak := 1$

$vin(\theta) := Vpeak \cdot \sin(\theta)$

Turn-on occurs at the first point when Vpeak sin(θ) = Vpeak/k,
that is, when sin(θ) = 1/k.

$$\theta on(k) := \operatorname{asin}\left(\frac{1}{k}\right)$$

Now, an averaging integral:

$$vave(k) := \frac{1}{2\cdot\pi}\cdot\int_{\theta on(k)}^{\theta on(k)+\pi} vin(\theta)\, d\theta$$

The highest value (for large k) is Vpeak/π .

Here is a plot:

$$vave(k) = \frac{1}{2\cdot\pi}\cdot\int_{\operatorname{asin}\left(\frac{1}{k}\right)}^{\operatorname{asin}\left(\frac{1}{k}\right)+\pi} \sin(\theta)\, d\theta$$

$i := 0..90$

$k_i := \frac{i}{10} + 1$

Here is a symbolic solution: $vave(k) = \frac{1}{\pi}\cdot\frac{\sqrt{k^2-1}}{k}$

The limit for large k is 1/π = 0.3183.

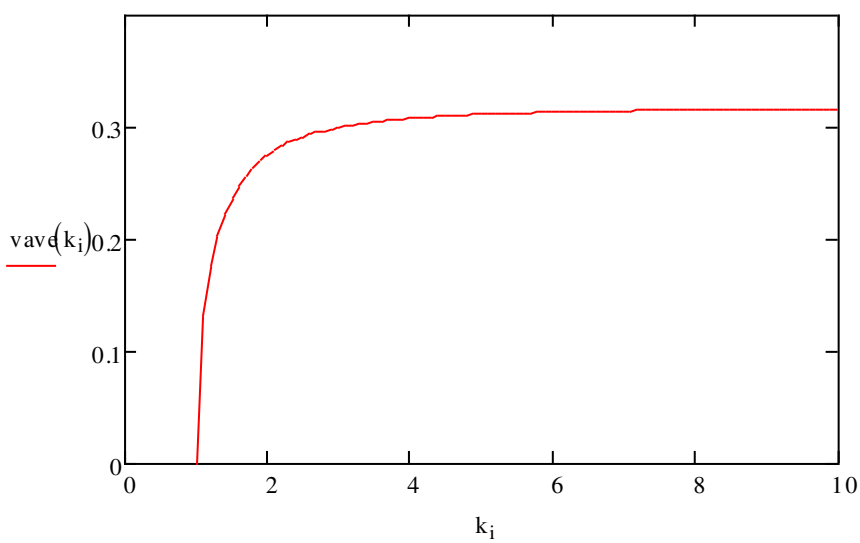

Problem 1.11

In the polarity reversal circuit of Example 1.6.1, we used an energy balance to determine the output voltage, assuming that each switch is on during half of the period *T*. What will the output be if the left switch is on 75% of *T* and the right switch is on 25% of *T*?

The determine this, perform an energy balance on the inductor as in the example. The voltage on the inductor is V_{in} with the left switch on and V_{out} with the right switch on. Energy balance is required. Over a full cycle, the net energy into the inductor must be zero.

$$\int_0^{0.75T} V_{in} I_L \, dt + \int_{0.75T}^{T} V_{out} I_L \, dt = \frac{3V_{in} I_L T}{4} + V_{out} I_L T/4$$

$$V_{out} = -3V_{in}$$

The output is reversed in polarity with a magnitude triple that of the input.

Problem 1.12

The step-up converter of Example 1.6.2 showed doubling at the output. Instead, keep the left switch on for 95% of T, and the right switch for 5% of T. What is the ratio V_{out}/V_{in} in this case?

Actually, the example was general and did not just point to a doubling. To determine the ratio for 95% on time for the left switch, perform an energy balance on the inductor as in the example. The voltage on the inductor is V_{in} with the left switch on and V_{in} - V_{out} with the right switch on. Energy balance is required. Over a full cycle, the net energy into the inductor must be zero.

$$\int_0^{0.95T} V_{in} I_L \, dt + \int_{0.95T}^{T} (V_{in} - V_{out}) I_L \, dt = V_{in} I_L T - 0.05 V_{out} I_L T$$

$$V_{out} = 20 V_{in}$$

The output is *not* reversed in polarity, and the ratio is 20. This is actually very difficult to achieve in practice because any small resistance in the inductor or other devices will cause a substantial voltage drop and limit the output.

Problem 1.13

The circuit in Figure 1.46 offers another arrangement of switches and energy storage. Assume that the switches act in alternation, and that each is on for 50% of the period T. What is the ratio V_{out}/V_{in}?

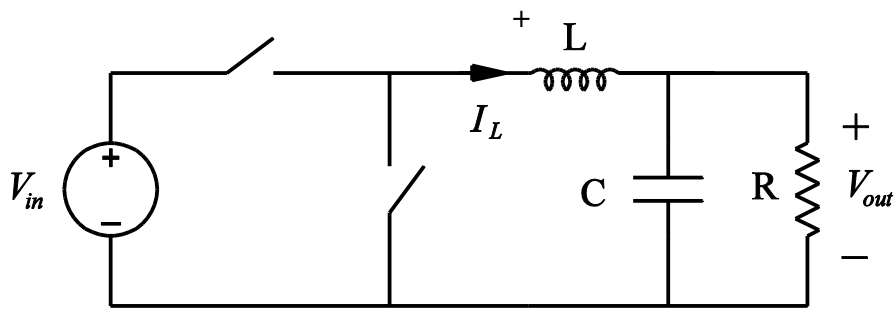

To determine the ratio for 50% on time for the left switch, perform an energy balance on the inductor. The voltage on the inductor is V_{in} -V_{out} with the left switch on and -V_{out} with the right switch on. Energy balance is required. Over a full cycle, the net energy into the inductor must be zero.

$$\int_0^{0.5T} (V_{in} - V_{out}) I_L \, dt + \int_{0.5T}^{T} (-V_{out}) I_L \, dt = V_{in} I_L T/2 - V_{out} I_L T$$

$$V_{out} = V_{in}/2$$

The ratio is 1/2. This is a *step-down* or *buck* converter.

Problem 1.14

Elements of Power Electronics, 2nd edition. © 2015, Philip T. Krein. All rights reserved.
Use and reproduction limited to authorized instructors registered with the publisher.
Unauthorized use is prohibited.

Compute the time at which the diode turns off each cycle in a half-wave rectifier with series R-L load. See Example 1.6.5.

The input is a sinusoid at some frequency. With a half-wave rectifier starting from zero, the diode becomes forward biased when the voltage goes positive.

Based on an input cosine function, the example has already provided the expression for current, with = L/R,

$$i(t) = V0\left[\frac{\omega\cdot L}{R^2+\omega^2\cdot L^2}\cdot e^{\left(\frac{-t}{\tau}-\frac{\pi}{2\cdot\omega\cdot\tau}\right)} + \frac{R}{R^2+\omega^2\cdot L^2}\cdot\cos(\omega\cdot t) + \frac{\omega\cdot L}{R^2+\omega^2\cdot L^2}\cdot\sin(\omega\cdot t)\right]$$

Consider a phase angle = t. The expression above for current is only valid while it is positive. The current flow starts at an angle of -90 degrees, corresponding to the moment when the voltage becomes positive. Current will continue to flow and the diode will stay on until some point between +90 degrees and +270 degrees. At that point, i(t) is zero until the next turn-on at 270 degrees.

This means the solution requested is the time such that:
i(t) = 0, +/2 < t < +3/2.

Since the zero is of interest, the multipliers can be cancelled, then divide by R to give

$$0 = \frac{\omega\cdot L}{R}\cdot e^{\left(\frac{-t}{\tau}-\frac{\pi}{2\cdot\omega\cdot\tau}\right)} + \cos(\omega\cdot t) + \frac{\omega\cdot L}{R}\cdot\sin(\omega\cdot t)$$

and this simplifies to

$$0 = \cos(\omega\cdot t) + \omega\cdot\tau\cdot\left[\sin(\omega\cdot t) + e^{\left(\frac{-t}{\tau}-\frac{\pi}{2\cdot\omega\cdot\tau}\right)}\right]$$

Now multiple top and bottom in the exponent first term by . Let t = and let = . Then

$$0 = \cos(\theta) + \xi\cdot\left[\sin(\theta) + e^{\left(\frac{-\theta}{\xi}-\frac{\pi}{2\cdot\xi}\right)}\right]$$

This transcendental equation does not have a closed-form solution, and indeed the only way to ensure a unique solution is to constrain the time interval as defined above. Since there is no closed-form solution to the problem, numerical solutions will be explored.

To see what happens, start with the L/R time constant equal to 1/, or = 1, then plot:

$$f(\theta,\xi) := \cos(\theta) + \xi\cdot\left[\sin(\theta) + e^{\left(\frac{-\theta}{\xi} - \frac{\pi}{2\cdot\xi}\right)}\right]$$

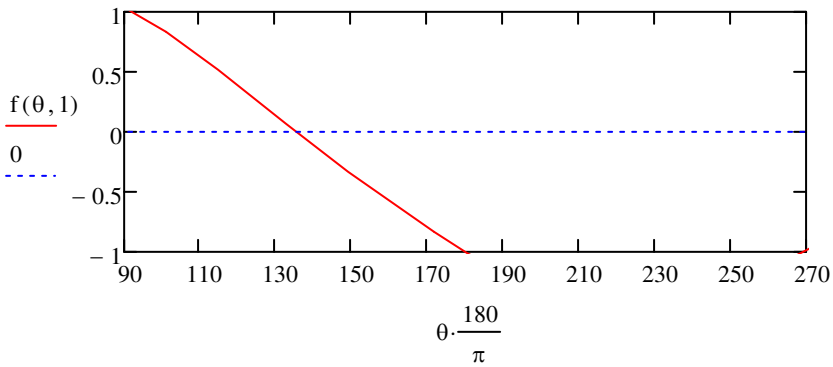

The diode turns off at about 135 degrees for this specific case.

Now, several more cases:

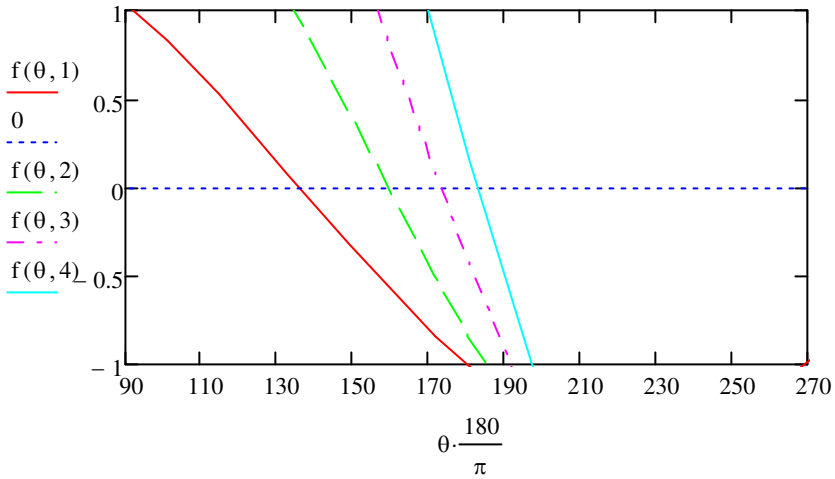

As might be expected, the diode turn-off time gets later and later as the L/R times constant, relative to the input period, becomes longer and longer. How about an extreme case? As the plot below shows, with L/R = 100 times 1/ω , the turn-off point is a bit over 250 degrees.

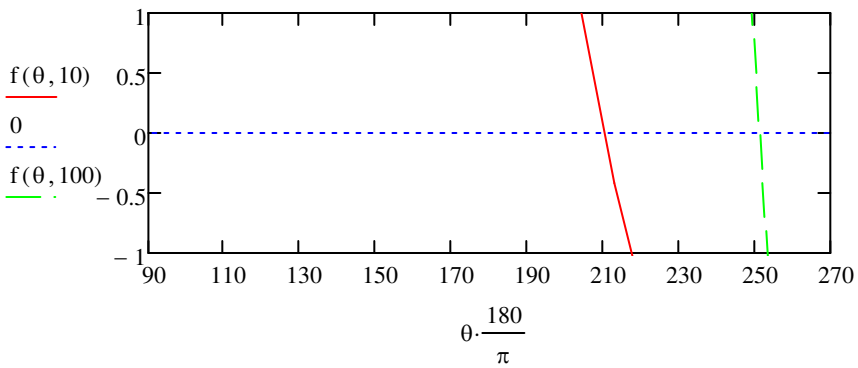

To give numerical values, here are two examples that use Mathcad's solver.

$x := 1$

Given

$0 = f(x, 1) \qquad x < \frac{3\cdot\pi}{2}$

$angle := Find(x)\cdot\frac{180}{\pi}$

$angle = 135.787$

At 60 Hz, the time would be:

$w := 120\cdot\pi$

$toff := \frac{angle\cdot\frac{\pi}{180}}{w} \qquad toff = 6.286\times 10^{-3}$ <-- 6.29 ms

Given

$0 = f(x, 100) \qquad x < \frac{3\cdot\pi}{2} \qquad x > \frac{\pi}{2}$

$angle := Find(x)\cdot\frac{180}{\pi}$

$angle = 249.879$

At 60 Hz, the time would be:

$w := 120 \cdot \pi$

$$toff := \frac{angle \cdot \frac{\pi}{180}}{w} \qquad toff = 0.012$$

<-- 12 ms

Problem 1.15

Elements of Power Electronics, 2nd edition. © 2015, Philip T. Krein. All rights reserved. Use and reproduction limited to authorized instructors registered with the publisher. Unauthorized use is prohibited.

A lossless ac– ac converter has 50 Hz ac input with a peak voltage of 400 V and 60 Hz output, also with a peak voltage of 400 V. Write an expression for the energy that must be stored in the converter. If the peak current is 50 A, what is the peak value of storage in joules?

Here the input should be sinusoidal, both for voltage and current. In general the current will be shifted in phase by some amount.

$fin := 50$ $\quad fout := 60$ $\quad Vpeak := 400$ $\quad \omega in := 2\cdot\pi\cdot fin$ $\quad \omega out := 2\cdot\pi\cdot fout$

$Vin(t) := Vpeak\cdot\cos(\omega in\cdot t)$ $\quad Iin(I0,t) := I0\cdot\cos(\omega in\cdot t - \varphi)$

While the output should also be sinusoidal, in general it might also have a phase shift compared to the input.

$Vout(t) := Vpeak\cdot\cos(\omega out\cdot t - \theta)$ $\quad Iout(I1,t) := I1\cdot\cos(\omega out\cdot t - \gamma)$

Here is the input power:

$Pin(I0,t) := Vin(t)\, Iin(I0,t)$

Now, expand this with trig identities:

$Vpeak\cdot\cos(\omega in\cdot t)\cdot I0\cdot\cos(\omega in\cdot t - \varphi)$

$$Pin(I0,t) := \frac{Vpeak\cdot I0}{2}\cdot\cos(2\cdot\omega in\cdot t - \varphi) + \frac{Vpeak\cdot I0}{2}\cdot\cos(\varphi)$$

Here is the output:

$$Pin(I1,t) := \frac{Vpeak\cdot I1}{2}\cdot\cos(2\cdot\omega out\cdot t - \theta - \varphi) + \frac{Vpeak\cdot I1}{2}\cdot\cos(\gamma - \theta)$$

Energy balance requires a match between these over time. Notice that in both cases the first term is a double-frequency term while the last term is fixed. Energy balance requires

$$\frac{Vpeak\cdot I0}{2}\cos(\varphi) = \frac{Vpeak\cdot I1}{2}\cdot\cos(\gamma - \theta)$$

If the angles are all zero, then I0 must match I1 to make this work. However, there is some freedom based on non-matching angles. Even so, when the input and output power are subtracted, the average terms must cancel. This means the dynamic internal stored power must be

$$\text{Pstore}(I0, I1, t) = \frac{\text{Vpeak}\cdot I0}{2}\cdot\cos(2\cdot\omega\text{in}\cdot t - \varphi) - \frac{\text{Vpeak}\cdot I1}{2}\cdot\cos(2\cdot\omega\text{out}\cdot t - \theta - \varphi)$$

The stored energy (which is zero average over time) is the time integral of this expression.

$$\text{Wstore}(I0, I1, t) = \int \left(\frac{\text{Vpeak}\cdot I0}{2}\cdot\cos(2\cdot\omega\text{in}\cdot t - \varphi) - \frac{\text{Vpeak}\cdot I1}{2}\cdot\cos(2\cdot\omega\text{out}\cdot t - \theta - \varphi)\right) dt$$

This gives the requested expression,

$$\text{Wstore}(I0, I1, t) = \frac{\text{Vpeak}\cdot I0}{4\cdot\omega\text{in}}\cdot\sin(2\cdot\omega\text{in}\cdot t - \varphi) - \frac{\text{Vpeak}\cdot I1}{4\cdot\omega\text{out}}\cdot\sin(2\cdot\omega\text{out}\cdot t - \theta - \varphi)$$

While this expression by itself may provide only limited insight, notice that the peak value is straightforward: there will be some time t at which the first sine functions is +1 and the second is -1. Therefore the peak storage requirement is:

$$\text{Wmax} = \frac{\text{Vpeak}\cdot I0}{4\cdot\omega\text{in}} + \frac{\text{Vpeak}\cdot I1}{4\cdot\omega\text{out}}$$

Only the current voltage peak values are relevant here, and the phase angles have no direct effect.

For values of 400 V, 50 A, 60 Hz, and 50 Hz, this yields:

$$\frac{\text{Vpeak}\cdot 50}{4\cdot\omega\text{in}} + \frac{\text{Vpeak}\cdot 50}{4\cdot\omega\text{out}} = 29.178$$

with units of joules

As a specific example, consider all the phase angles to be zero and I1 = I0 = 50 A.

$I0 := 50$

$\gamma := 0 \qquad \varphi := 0 \qquad \theta := 0$

$I1 := 50$

Then, the power difference is

$$\text{Pdiff}(t) := \frac{\text{Vpeak}\cdot I0}{2}\cdot\cos(2\cdot\omega\text{in}\cdot t - \varphi) - \frac{\text{Vpeak}\cdot I1}{2}\cdot\cos(2\cdot\omega\text{out}\cdot t - \theta - \varphi)$$

and the stored energy must be

$$\text{Wstore}(t) := \int_0^t \text{Pdiff}(s)\, ds$$

Plot these.

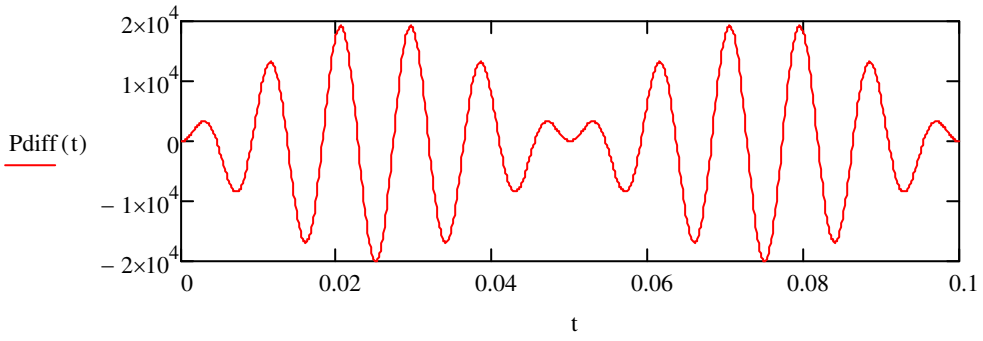

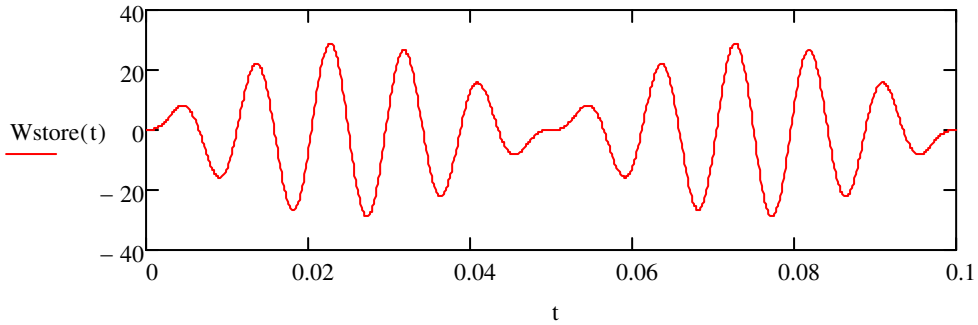

The peak storage need based on a 50 A current is about 29 J, as per the above computation.

Problem 1.16

A switching power converter is designed to have efficiency of 95% when the output load is 100 W. The efficiency increases linearly up to 97% with 200 W output (i.e., efficiency is 96% at 150 W, and so on). Similarly, the efficiency decreases to 94% at 50 W output. The converter will be damaged whenever the power dissipated inside it exceeds 6 W. If the converter is intended to operate for output loads between 20 W and some maximum limit, what is the upper limit of output power that can safely be supplied?

Solution: While efficiency is linear with respect to output voltage over the given range, notice that the linear range must have limits. (It does not make sense, for instance, that efficiency goes to 100% at 350 W output.) Even so, over the given range, apparently the efficiency is

$$\eta = 0.93 + 0.0002 \times P_{out} \quad (1)$$

over the range of interest. Of interest here is the power loss, which must be limited to 6 W. Since efficiency is defined as

$$\eta = P_{out}/P_{in} \quad (2)$$

notice that the power loss, $P_{in} - P_{out}$, is given by

$$P_{loss} = P_{out}/\eta - P_{out} \quad (3)$$

Plot this relationship from the minimum 20 W to 200 W. This gives:

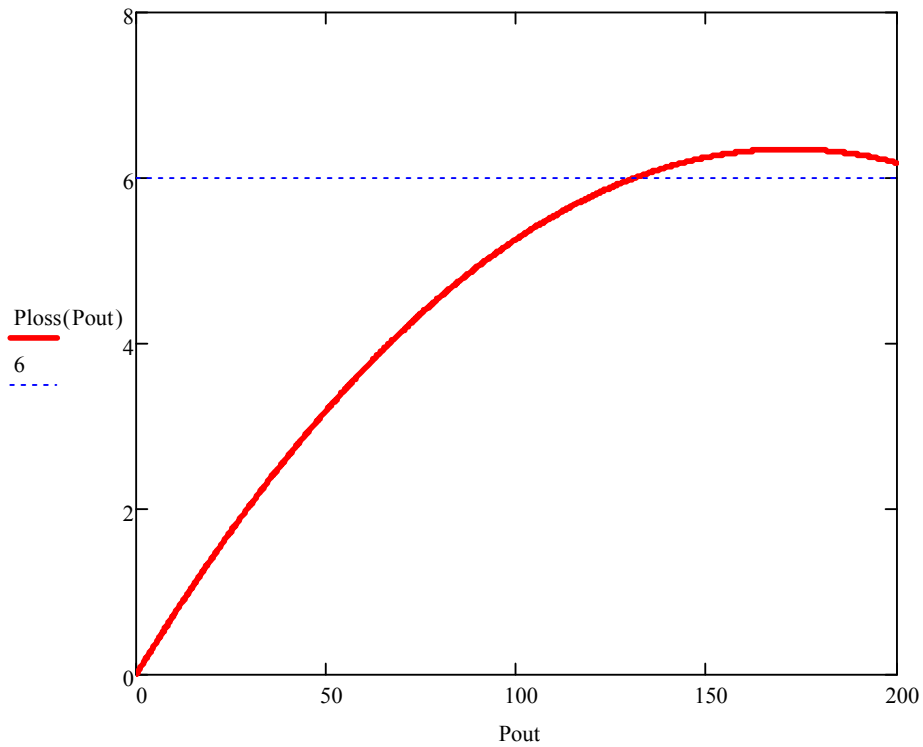

So there is a maximum output power between 100 W and 150 W that is the requested upper limit. The actual value is obtained by solving (3) for a value of 6 W, giving

$$6\ \text{W} = P_{out}/(0.93+0.0002P_{out}) - P_{out}, \quad 20\ \text{W} < P_{out} < 200\ \text{W} \quad (4)$$

This can be solved by the quadratic formula or with any number of root-finding tools. For instance, add P_{out} and multiply to give

$$(6 + P_{out}) \times (0.93 + 0.0002P_{out}) = P_{out} \quad (5)$$

$$5.58 + 0.012P_{out} + 0.93P_{out} + 0.0002P_{out}^2 = P_{out} \qquad (6)$$

$$0.0002P_{out}^2 - 0.0688P_{out} + 5.58 = 0 \qquad (7)$$

yields a quadratic relationship with roots to be found, and the maximum output power is 130.96 W. The vendor should list 130 W (not 131 W) to make sure that small errors will not cause any trouble.

Problem 1.17

A switching power converter is designed to have efficiency of 94.5% when the output load is 100 W. The efficiency increases linearly up to 96.5% with 200 W output (i.e., efficiency is 95.5% at 150 W, and so on). Similarly, the efficiency decreases to 93.5% at 50 W output. The converter will be damaged whenever the power dissipated inside it exceeds 6 W. If the converter is intended to operate for output loads between 20 W and some maximum limit, what is the upper limit of output power that can safely be supplied? The efficiency values are uniformly ½ point below those of Problem 1.16.

Solution: While efficiency is linear with respect to output voltage over the given range, notice that the linear range must have limits. (It does not make sense, for instance, that efficiency goes to 100% at 350 W output.) Even so, over the given range, apparently the efficiency is

$$\eta = 0.925 + 0.0002 \times P_{out} \quad (1)$$

over the range of interest. Of interest here is the power loss, which must be limited to 6 W. Since efficiency is defined as

$$\eta = P_{out}/P_{in} \qquad (2)$$

notice that the power loss, $P_{in} - P_{out}$, is given by

$$P_{loss} = P_{out}/\eta - P_{out} \qquad (3)$$

Plot this relationship from the minimum 20 W to 200 W. This gives:

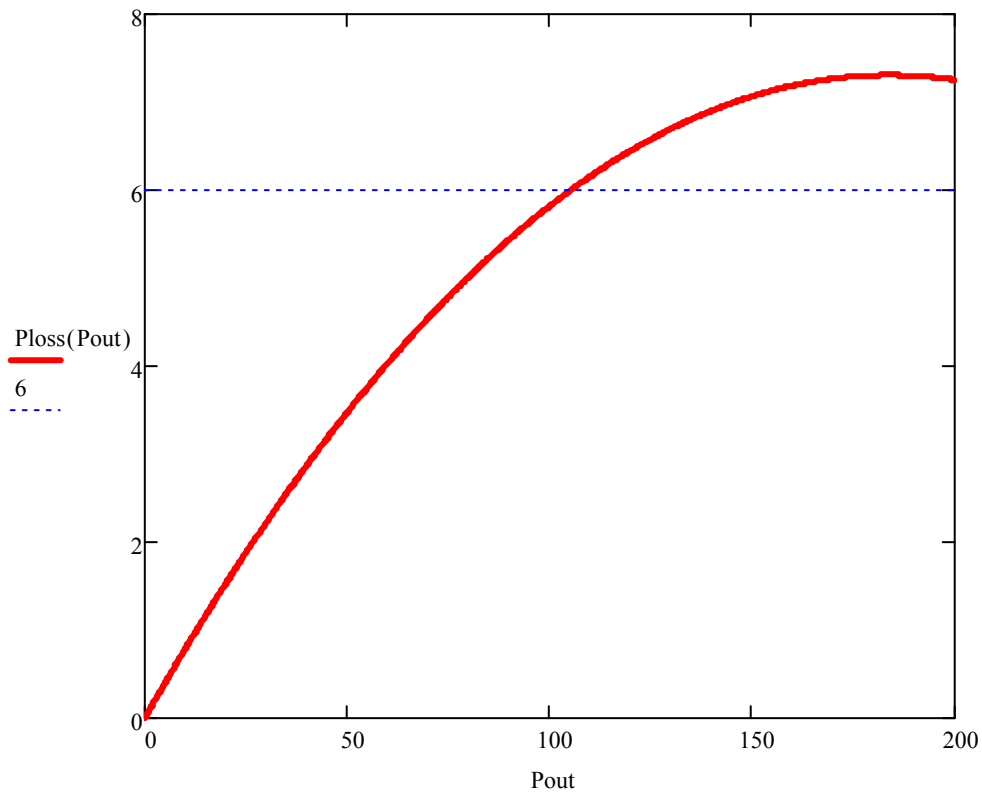

So there is a maximum output power between 100 W and 150 W that is the requested upper limit. The actual value is obtained by solving (3) for a value of 6 W, giving

$$6\ \text{W} = P_{out}/(0.925+0.0002P_{out}) - P_{out},\quad 20\ \text{W} < P_{out} < 200\ \text{W} \quad (4)$$

This can be solved by the quadratic formula or with any number of root-finding tools. The maximum output power is the intersection point, 105.19 W. The vendor should list 105 W as the limit. This "small" error that the efficiency is off by ½ point has resulted in almost 20% lower power capability for this supply. Small errors in losses are often magnified in this way.

Problem 1.18

Elements of Power Electronics, 2nd edition. © 2015, Philip T. Krein. All rights reserved. Use and reproduction limited to authorized instructors registered with the publisher. Unauthorized use is prohibited.

In the circuit of Figure 1.47, the switches operate in alternation. The left switch is on 75% of each period and the right switch is on 25% of each period. The inductor and capacitor values are large. Based on energy analysis, find V_{out} for this converter in terms of V_{in}, R_L, and R. What is the efficiency if R_L = R/100?

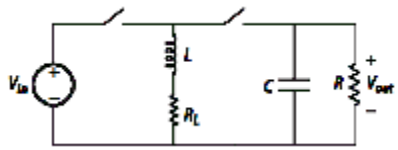

There are many ways to attack the problem, and one way is to treat the combination of L and R_L as a one-port for energy analysis. There will be energy injected into the one-port when the respective switches are on, and energy lost because of the resistor. Define the one-port current as IL, downward through the inductor.

With the left switch on:

$$\text{Win(left)} = \int_0^{0.75\cdot T} \text{Vin}\cdot\text{IL}\,dt$$

With the right switch on:

$$\text{Win(right)} = \int_{0.75\cdot T}^{T} \text{Vout}\cdot\text{IL}\,dt$$

The loss over a full period is:

$$\text{Wloss} = \int_0^{T} \text{IL}^2\cdot\text{RL}\,dt$$

The net input must be zero -- conservation of energy:

$$0 = \int_0^{0.75\cdot T} \text{Vin}\cdot\text{IL}\,dt + \int_{0.75\cdot T}^{T} \text{Vout}\cdot\text{IL}\,dt - \int_0^{T} \text{IL}^2\cdot\text{RL}\,dt$$

Since all these terms are essentially constant, this becomes

$$0 = 0.75\cdot T\cdot\text{Vin}\cdot\text{IL} + 0.25\cdot T\cdot\text{Vout}\cdot\text{IL} - \text{IL}^2\cdot\text{RL}\cdot T$$

Divide by ILxT and multiply by 4 to give

$$0 = 3 \cdot Vin + Vout - 4 \cdot IL \cdot RL$$

The result is $$Vout = -3 \cdot Vin + 4 \cdot IL \cdot RL$$

This is not a complete, final result because IL is not an independent variable, but instead depends on Vout so the answer is not finished. How to find IL? A second equation is needed, and it is available from an energy balance on the capacitor. Define current IC aimed downward through the capacitor. With the left switch on, capacitor energy flows out to the load. With the right switch on, energy flows out to the inductor and also to the load. Even though energy is always "out," it is still true that the net must be zero. This yields:

$$Wout(cap) = \int_{0.75 \cdot T}^{T} Vout \cdot IL \, dt + \int_{0}^{T} \frac{Vout^2}{R} \, dt$$

The balance is

$$0 = 0.25 \cdot T \cdot Vout \cdot IL + \frac{Vout^2}{R} \cdot T$$

Divide by Vout x T and multiply by 4 to give

$$0 = IL + 4 \cdot \frac{Vout}{R}$$

This requires

$$IL = -4 \cdot \frac{Vout}{R}$$

Substitute this into a prior expression, $$0 = 3 \cdot Vin + Vout - 4 \cdot IL \cdot RL$$

to give $$0 = 3 \cdot Vin + Vout + 16 \cdot \frac{Vout}{R} \cdot RL$$

Solve to give

$$Vout = \frac{-3 \cdot Vin}{\left(1 + 16 \cdot \frac{RL}{R}\right)}$$

If R_L is very small, the output is $-3V_{in}$. However, any impact of R_L is greatly amplified. In this problem, the question involves R_L = R/100. This might seem small, but now

$$\text{Vout} = \frac{-3 \cdot \text{Vin}}{1 + \frac{16}{100}} \qquad \text{Vout} = \frac{-3 \cdot \text{Vin}}{1.16} \qquad \frac{3}{1.16} = 2.586$$

$$\text{Vout} = -2.586\,\text{Vin}$$

This is only 86% of the expected magntitude even though the inductor's resistance is just 1% of the load value.

Problem 1.19

Elements of Power Electronics, 2nd edition. © 2015, Philip T. Krein. All rights reserved. Use and reproduction limited to authorized instructors registered with the publisher. Unauthorized use is prohibited.

A certain electric motor drives a load that averages 50 HP of mechanical output. The motor operates at an efficiency of 87% and is expected to operate for at least 20 years. The cost of the motor was US$500. Take the average cost of electricity to be US$0.10/kW-h.

a. What is the energy cost associated with this motor over its 20-year operating life?

b. An inverter is available, at the cost of US$2000, that would adjust the operation of this motor and improve its operating efficiency. It is found that the combined efficiency of the motor plus the inverter is 90%. What is the energy cost over the 20-year operating life?

50 HP at 746 W/HP is an output of 37.3 kW. Since efficiency is defined such that $\eta = P_{out}/P_{in}$, an efficiency of 87% implies $P_{in}=P_{out}/\eta$ = 37.3 kW/0.87, and P_{in} = 42.9 kW.

a. Over 20 years, at 24 h/day and 365.25 day/yr, the total energy is

$$Wtot := \frac{746 \cdot 50}{0.87} \cdot 24 \cdot 365.25 \cdot 20 \qquad Wtot = 7.517 \times 10^{9}$$

Units are W-h.

Divide by 1000 to yield kWh,

$$kW20 := \frac{Wtot}{1000} \qquad kW20 = 7.517 \times 10^{6}$$

Cost is $0.10/kWh, $\quad Cost := kW20 \cdot 0.1 \qquad Cost = 7.517 \times 10^{5}$ Dollars

Energy cost is $751,700. over the 20-year interval

b. An extra $2000 will increase η to 90% at full load, so now the new input power is

$$Pinxtra := \frac{746 \cdot 50}{0.9} \qquad Pinxtra = 4.144 \times 10^{4}$$

41.4 kW

$$Wtotxtra := Pinxtra \cdot 24 \cdot 365.25 \cdot 20 \qquad Wtotxtra = 7.266 \times 10^{9}$$

Units are W-h.

In kWh, $\quad kW20xtra := \frac{Wtotxtra}{1000} \qquad kW20xtra = 7.266 \times 10^{6}$ kWh

Cost is $726,600. over the 20-year interval.

The savings are $25,100. over 20 years, an interesting return on the extra $2000 investment.

Problem 1.20

Elements of Power Electronics, 2nd edition. © 2015, Philip T. Krein. All rights reserved. Use and reproduction limited to authorized instructors registered with the publisher. Unauthorized use is prohibited.

In a typical temperate climate, measured data show that a solar panel with a nameplate rating of 100 W can produce about 500 W-h of energy each day, on average over many years. Consider a commercial building with an average energy consumption rate of 300 kW.

a. How many such solar panels would be needed to supply all the energy for this building?

b. At US$0.10/kW-h, what is the cash value of energy produced by a 100 W solar panel each year?

A 100 W panel can produce 500 Wh/day over many years on average. A building consuming 300 kW on average needs 300000 x 24 = 7,200,000 Wh/day to function. This requires 7,200,000/500 = 14400 panels.

A single panel produces 500 Wh/day x 365.25 day/yr, or

$$Wyear := 500 \cdot 365.25 \qquad Wyear = 1.826 \times 10^5 \quad \text{Wh/year}$$

This means one panel delivers 182.6 kWh per year, with a value of $18.26 each year.

Problem 1.21

Elements of Power Electronics, 2nd edition. © 2015, Philip T. Krein. All rights reserved. Use and reproduction limited to authorized instructors registered with the publisher. Unauthorized use is prohibited.

IIn a boost converter (Figure 1.24), the switches act in alternation. Each is on for 10 s, then off for 10 s, and so on. The input voltage is 5 V, the inductor is 1 mH, the capacitor is 100 F, and the resistor is 10 . The capacitor voltage rating is 50 V.

a. Use energy balance to find the output voltage and the inductor current.

b. A problem occurs and the resistor is disconnected, but the converter continues to operate. Estimate the amount of time after disconnection before the capacitor voltage goes above its rating limit.

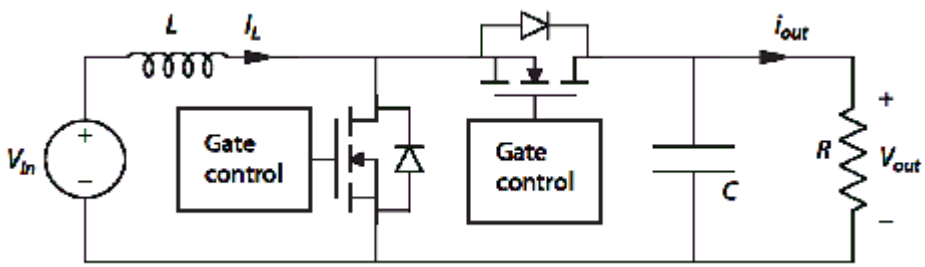

For part (a), the analysis in Example 1.6.2 is still valid, provided the capacitor voltage and inductor current are just about constant. Are they? This should be tested. Fig. 1.25 provides the configurations.

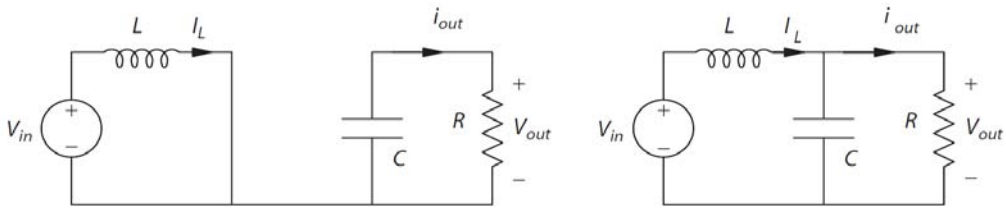

The input is 5 V and the value of D for eq. (1.14) is 0.5. If the analysis holds, the output must be 10 V. The output power must be 10^2/10 ohms = 10 W. There is no loss, so the input power must also be 10 W. This requires the inductor current to be 10 W/5 V = 2 A. The load current is 1 A.

How much does the current change? In the left configuration above, the inductor voltage is 5 V. Since v_L = L di/dt, and L = 1 mH, the current changes at a rate of 5000 A/s. That might seems high, but the configuration holds for only 10 us, during which the current changes by (5000 A/s) x 10 us = 0.05 A. This is only 2.5% of the dc value, so indeed the current is nearly constant.

What about the capacitor voltage? In the left configuration, the capacitor is carrying 1 A output. Since i_C = C dv/dt and C = 100 uF, the rate of change is 10000 V/s. However, in 10 us the voltage changes only 0.1 V, just 1% of the dc value. This is nearly constant, so we can conclude that the requirements of Example 1.6.2 are met and the analysis is valid. The output voltage is 10 V and the inductor current is 2 A. (Formally, the output will be 10 V +/- 0.5% and the current will be 2 A +/- 1.25%.) In the right configuration, the inductor voltage is -5 V, so indeed the current rises 0.05 A and then falls 0.05 A each cycle, maintaining a 2 A average.

Part (b) is relatively challenging.

For part (b), with the load removed there is no energy removed from the circuit. Instead it will build up cycle by cycle. Every time the left switch is on, for instance, the inductor is exposed to 5 V and its current will rise 0.05 A. Similarly, every time the right switch is on, the capacitor will be exposed to 2 A and the voltage will rise 0.2 V. There is nothing to make the voltage fall, so the rise will continue until the capacitor reaches a rating limit. However, the inductor is exposed to 5 V - V_{out} when the right switch is on, so the continuing rise of the output voltage will cause the average output current to fall. For example, if the inductor is so large that the current remains close to 2 A for quite some time, the capacitor voltage will rise 0.1 V each cycle and will rise 1 V every 10 cycles, reaching 50 V after 400 cycles.

In this problem, the result is different: the combination of L and C represents a resonant circuit. When the load is removed, there is no loss in the circuit, and the energy in the capacitor and inductor exchange sinusoidally over time, governed by the resonant frequency. Since no energy is being consumed, on average no energy can be drawn from the input supply. This can only be achieved if the average inductor current becomes zero. If the converter is in steady state and the load is disconnected at time t=0 with the inductor current initially at 2 A, the inductor current changes from a dc value to
$i(t) = 2 \cos(\omega t)$.

This current flows to the capacitor only half the time, so in effect the capacitor current becomes
$i_C(t) = 1 \cos(\omega t)$

and $v_C(t) = \int \frac{i_C(t)}{\omega \cdot C} dt$

becomes $v_C(t) = 1/\omega \sin(\omega t)$. In this problem, it turns out that the switch action implies $\omega = \frac{1}{2 \cdot \sqrt{L \cdot C}}$ =1581 rad/s or 252 Hz. The value of $v_C(t)$ becomes 6.32 sin(ω t), be this must be added to the original 10 V value. Therefore $v_C(t) = 10 + 6.32 \sin(\omega t)$ after the load is removed at time t=0. The net result is that the capacitor voltage does not actually ever exceed it limit, although it overshoots from the original value by more than 60%.

Here is a simulation result performed in Excel based on the v_L = L di/dt and i_C = C dv/dt expressions, considered every 10us.

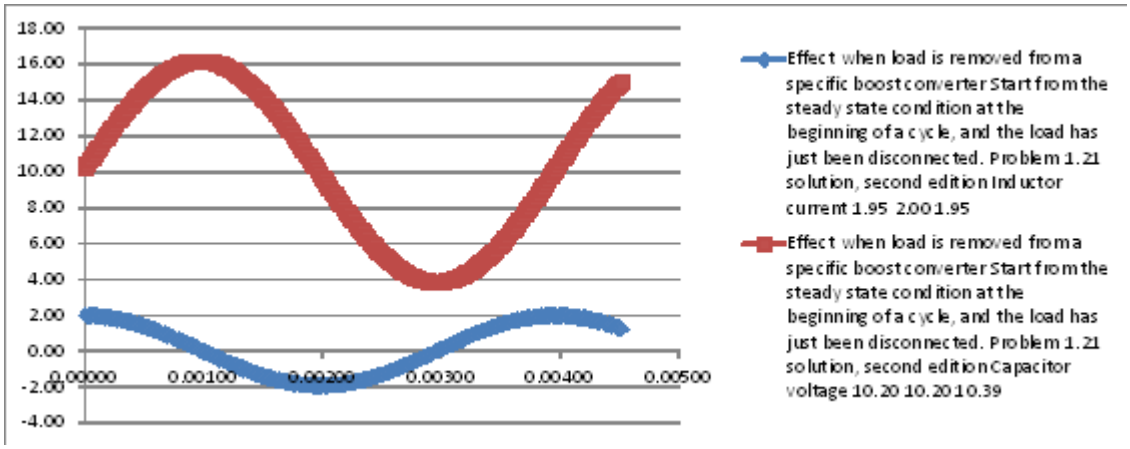

Now one can argue that this analysis was not very instructive. A more typical situation comes into play in most real implementations of boost converters. In these circuits, energy flows only in one direction, from input to output. The inductor current will not become negative and energy will not be exchanged between the inductor and capacitor. What happens in this case when the load is disconnected?

After about 1 ms, the inductor current reaches zero. When the left switch turns on, the current climbs 50 mA as above. This injects energy 1/2 L i^2 = 1.25 uJ into the converter during each cycle. All of this energy is transferred to the capacitor, and its voltage begins to build up consistent with stored energy 1/2 C v^2. Starting from about 16 V, the voltage increases by a small increment Δ v each cycle as energy builds up by 1.25 uJ each time.

Consider the capacitor energy at the end of a cycle:
1/2 C v^2 + 1.25 uJ = 1/2 C $(v + \Delta v)^2$. The voltage increase will be small, and in the limit of small Δ v this becomes
1/2 C v^2 + 1.25 uJ = 1/2 C v^2 + C v Δ v

Therefore the voltage increases by an amount Δ v = 1.25 uJ/(C v) during each cycle. Start from 16 V, the next step will be (1.25 uJ)/(100 uF v) = 0.0125/16 v = 0.78 mV. The next step is 0.0125/16.0078, and so on. Here is a table of results, and a graph:

$i := 0 .. 10000($

$v_0 := 16$ $\qquad v_{i+1} := v_i + \frac{0.0125}{v_i}$

v =

	0
0	16
1	16.00078
2	16.00156
3	16.00234
4	16.00312
5	16.00391
6	16.00469
7	16.00547
8	16.00625
9	16.00703
10	16.00781
11	16.00859
12	16.00937
13	16.01015
14	16.01093
15	...

$v_{89758} = 50$

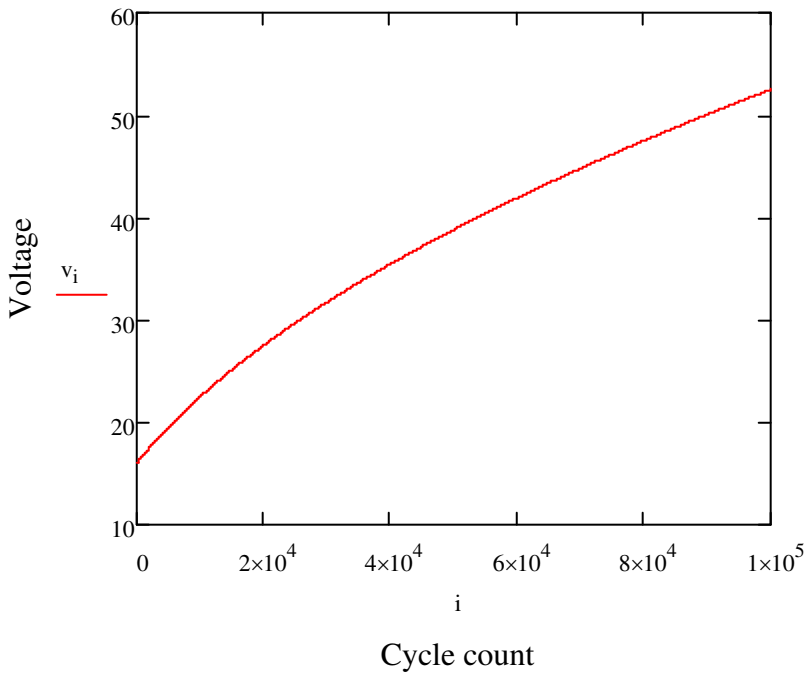

It takes about 90000 cycles to reach 50 V. While that seems like a lot, the time is only 20 us per cycle, so 90000 cycles involves about 1.8 s. In less than 2 s, the capacitor will exceed its voltage rating.

Problem 1.22

Elements of Power Electronics, 2nd edition. © 2015 Philip T. Krein. All rights reserved. Use and reproduction is limited to authorized instructors registered with the publisher, Oxford University Press. Unauthorized use is prohibited.

The version of the polarity reverser circuit shown in Figure 1.48 includes a model for capacitor losses. The resistor RC represents loss in the internal materials and the wires. The switches operate in alternation. Each is on 50% of a cycle. The inductor and capacitor values are large. What is Vout for this converter in terms of Vin, R_C, and R? (Hint: Conservation of energy requires that the input average power match the output average power plus the internal loss $I_C^2R_C$.)

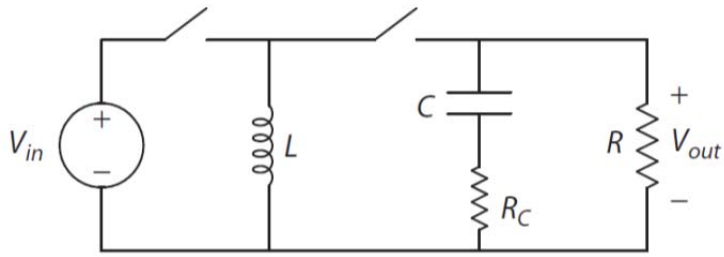

In this problem, the output voltage is not constant. As in prior energy methods, we expect the inductor current and capacitor voltage not to change much. Define a voltage vout1 with the left switch on and vout2 with the right switch on. Also define a capacitor current, directed down, with a value ic1 when the left switch is on and ic2 when the right switch is on. Define inductor current IL directed down and voltage Vc with positive at the top. The energy balance on the inductor is as follows:

Input energy: Vin IL T/2 for the first half cycle, and then vout2 IL T/2 for the second half cycle. The net energy into the inductor must be zero, and this requires vout2 = -Vin.

The energy balance on the capacitor is as follows:

Input energy: Vc ic1 T/2 with the left switch on, and Vc ic2 T/2 with the right switch on. The net energy is zero, so ic1 = - ic2. Notice that this reduces to the observation that <ic>=0.

Notice also the output current, defined such that iout1 = vout1/R and iout2 = vout2/R. When the left switch is on (the right is off), this requires iout1 = -ic1 = ic2. With the right switch on, instead iout2 = -ic2 –IL.

What about the sum of the two output current segments? This is

iout1 + iout2 = ic2 – ic2 – IL = -IL

The sum is double the average output current, therefore 2 <iout> = -IL. We seek the average output voltage, <vout>, which is the same as <iout> R.

What about the capacitor voltage? Since <ic> = 0, notice that the (constant) value of Vc must match such that Vc = <vout>. This must be true, since any other value would require a non-zero average drop across Rc, violating the capacitor energy balance.

What about vout1? With the left switch on and right switch off, the voltage is given by a divider relationship, vout1 = Vc R/(R + Rc). The average voltage, since each value is in effect a half period, is

<vout> = vout1/2 + vout2/2 = Vc R/(2R + 2Rc) – Vin/2, and Vc = <vout>.

The relationships ultimately combine to give

<vout> = <vout> R/(2R + 2 Rc) – Vin/2

And this simplifies to give

<vout> = -Vin (R + Rc)/(R + 2 Rc), or <vout> = -Vin (1 + Rc/R)/(1 + Rc/2R).

Problem 1.23

Elements of Power Electronics, 2nd edition. © 2015, Philip T. Krein. All rights reserved. Use and reproduction limited to authorized instructors registered with the publisher.

Charge conservation is not the same as "current conservation." Many power converters seem not to "conserve" current even though they meet all laws of energy and charge conservation. The type of circuit explored in this circuit provides an example.

Series regulators are three-terminal devices in which input and output current are matched, but a voltage step-down action occurs. In this example, the input is 20 V and the output is 10 V. The load draws 5 A, so the input also requires 5 A. This means the output power is 50 W and the input is 100 W. The efficiency is P_{out}/P_{in} = 50%. More generally, a series regulator has efficiency equal to V_{out}/V_{in} since the input and output currents match.

This does not appear to be a power electronics approach. The circuit cannot, even ideally, approach 100% efficiency unless the input and output voltages are the same -- in which case no conversion action is occurring.

Series regulators are widely used in electronics because they can produce precise fixed output voltages, but are avoided by power electronics designers unless the input and output voltages are nearly identical.

The circuit will be explored further in a later chapter.

$I0 := 50$

$I1 := 50$

Problem 1.24

Elements of Power Electronics, 2nd edition. © 2015 Philip T. Krein. All rights reserved. Use and reproduction is limited to authorized instructors registered with the publisher, Oxford University Press. Unauthorized use is prohibited.

A designer wants to obtain the advantages of the polarity reverser but avoid the change of sign. One way to do this is to cascade two converters. The second "reverses" the output of the first. Draw this combination. If the left-hand switch in each converter is on 25% of a period and the right-hand switch is on 75% of each period, what is the overall ratio V_{out}/V_{in}?

Here is the combination:

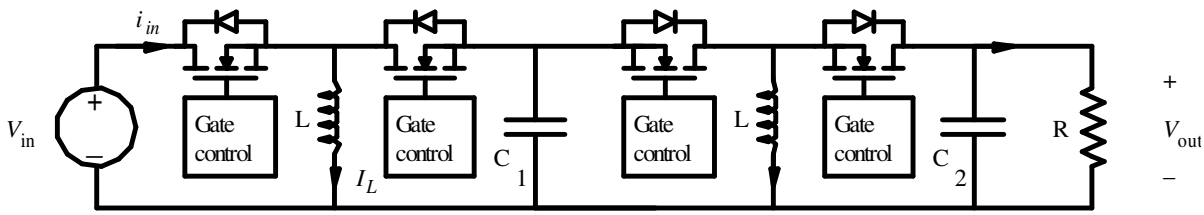

Notice that the right portion of the converter needs it switches reversed since its input is negative voltage. The capacitor C1 makes the two sections operate independently by maintaining a fixed voltage. What about the values? Consider first the voltage at C1 and the input-side converter. Following from Example 1.6.1 with the left switch on 25% of a cycle and the right one on 75% of the time, the input energy is Vin IL T/4 with the left on and VC1 IL 3 T/4 with the right on. These must sum to zero,

Vin IL T/4 + VC1 IL 3 T/4 = 0

Multiply by 4/(IL T) to give Vin + 3 VC1 = 0, VC1 = -Vin/3.

The output side converter behaves in the same manner, with an effective input voltage VC1 (negative). The overall output must be Vout = +Vin/9, Vout/Vin = 1/9.

Problem 1.25

Elements of Power Electronics, 2nd edition. © 2015, Philip T. Krein. All rights reserved.
Use and reproduction limited to authorized instructors registered with the publisher.

What is the rms value of a +/- 200 V square wave at 60 Hz?

The definition of rms value is:

$$\sqrt{\frac{1}{T}\cdot\int_{\tau}^{\tau+T} v(t)^2\,dt}$$

Since the square of +/- 200 V is 40000, the rms value is simply 200 V. The frequency does not affect the value for a square wave.

$I0 := 50$

$I1 := 50$

Problem 1.26

Elements of Power Electronics, 2nd edition. © 2015, Philip T. Krein. All rights reserved. Use and reproduction limited to authorized instructors registered with the publisher. Unauthorized use is prohibited.

An inverter for an electric vehicle has a typical efficiency of 98%. There are six power devices in the inverter. They dissipate power in approximately equal shares. Each can handle power dissipation of 250 W, voltage of 600 V, and current of 600 A. Other parts of the inverter consume about 200 W total. The main dc power source is 350 V_{dc}. What is the maximum power that can be achieved at the output without violating any limits?

Although typically efficiency is not fixed, expected values can be useful for estimating thermal limits in power converters. The operating limits here involve device power loss, voltage, and current. The question is which limit might be reached first and is most restrictive on performance?

Fig. 1.45 provides a hint about the electrical architecture. Since the power source is at 350 V, presumably the 600 V switch rating will be adequate and will not be the limiting factor.

What about power loss? With six devices and an extra 200 W of consumption, the total lost power could be as high as 6 x 250 + 200 = 1700 W. If efficiency η =Pout/Pin really is 98%, and given that Pin = Pout + Ploss with Ploss = 1700 W, the highest power rating would be when 0.02Pout = 0.98 x 1700 W. Therefore Pout cannot exceed 83.3 kW.

What about current? 83.3 kW plus 1700 W of loss from a 350 V source requires 243 A. It seems unlikely that this would push the 600 A rating of the devices.

Therefore power dissipation will limit the output power to about 83.3 kW.

Problem 1.27

Elements of Power Electronics, 2nd edition. © 2015 Philip T. Krein. All rights reserved. Use and reproduction is limited to authorized instructors registered with the publisher, Oxford University Press. Unauthorized use is prohibited.

What will happen over a long time interval to the circuit of Figure 1.21 if there is an initial mismatch in power flows? You might consider the start-up case, in which iL = vC = 0 initially.

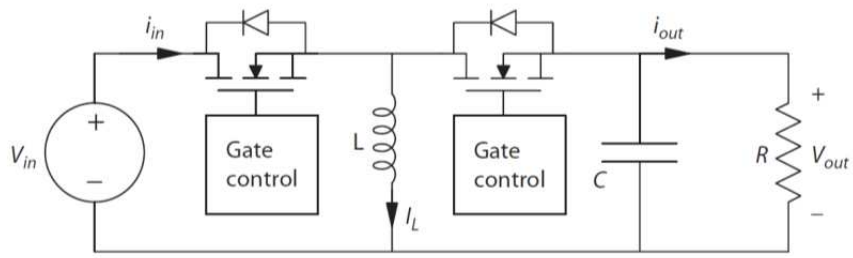

Notice that if initially iL = vC = 0, when the left switch is turned on, voltage Vin is imposed on the inductor and the current will rise. After that, the right switch turns on by vC = 0 and so the inductor current will stay constant in principle, but in fact current will be pulled out of the capacitor, drawing its voltage slightly negative.

During each cycle, further energy will be drawn from the input supply, and the imposed current will draw down the output. This will continue until a balance is reached: energy comes in when the left switch is on, and goes out when the right switch is on. Once the voltages balance such that energy input and output balance, the converter will behave in a periodic manner and reach periodic steady state with fixed output voltage.

Notice that any mismatch in power flow will drive energy change until balance is restored. In periodic steady state, the net energy in and out must balance. Under any mismatch condition, energy is being added or substracted in the net over each cycle in a way that drives back to balance.

Problem 1.28

Elements of Power Electronics, 2nd edition. © 2015, Philip T. Krein. All rights reserved. Use and reproduction limited to authorized inst ructors registered with the publisher. Unauthorized use is prohibited.

Efficiency is difficult to measure. In a laboratory setting, a certain converter is measured to have input power of 28.2 W and output power of 28.4 W. The meter accuracy on this scale is ±0.75%. With this level of accuracy, what range of power loss values is consistent with the data?

Each reading should be taken as the value provided +/- 0.75%. For 28.2 W, this means the reading is 28.2 +/- 0.21 W. For 28.4 W, the reading is 28.4 +/- 0.21 W.

Notice also that the meter only provides three significant digits. It would appear that the correct output is in the range of 28.2 W to 28.6 W and the correct input is in the range of 28.0 W to 28.4 W. The loss is the difference. In this case the correct loss Pin - Pout is consistent with a range of -0.6 to +0.2 W. Negative loss is not plausible, of course, but the error on the correct loss is large in any case.

This example illustrates the challenge of measuring loss, especially in very efficient systems. The loss is the small difference between two large (and uncertain) numbers. It is not really possible to get high accuracy for loss values just by taking differences.

Problem 1.29

Elements of Power Electronics, 2nd edition. New York: Oxford University Press, 2015. © 2015 Philip T. Krein. All rights reserved. Use and reproduction is limited to authorized instructors registered with the publisher, Oxford University Press. Unauthorized use is prohibited.

Because the solar panels in Figures 1.38 are in series, the one with the lowest illumination tends to govern overall performance. This is not true for the architectures in Figures 1.39 and 1.40, since each solar panel is processed independently. Compare the output power into the electricity grid of a solar system in the following cases. Each one involves 10 solar panels, measured at local solar noon.

a. Consider the architecture in Figure 1.38, in which each panel is rated to deliver 500 W at 50 V. The voltage does not change much, but differential illumination and other factors drop the current on individual panels by up to 5%. The inverter is about 97% efficient at 5 kW. Find the output power into the grid.

b. Consider the architecture in Figure 1.39, in which the panels produce output between 95% and 100% of 500 W with a random but uniform distribution. The dc–dc converters are 98% efficient and the inverter is 97% efficient. Find the output power into the grid.

c. Consider the architecture in Figure 1.40, in which panels produce output between 95% and 100% of 500 W with a random but uniform distribution. The microinverters are 96% efficient. Find the output power into the grid.

a) In this case, each panel is rated to deliver 10 A at full illumination. However, if one is 5% lower it can only produce 9.5 A. Since all ten are in series, the currents must match and the combined output is 9.5 A. The voltage is 500 V, and the power delivered will by 500 V x 9.5 A = 4750 W. The inverter delivers 97% of this to the grid, 4608 W.

b) In Fig. 1.39, each panel will deliver its maximum. If the distribution is random between 95% and 100%, the average will be 97.5% or 487.5 W. Each dc-dc converter will deliver 98% of this, or 478 W on average. The total into the inverter will be 4778 W. The inverter delivers 97% to the grid, for a total of 4634 W. The local converters have adjusted for a better result, with an improvement compared to 4608 W of about 0.6%.

c) In Fig. 1.40, the panels on average produce 487.5 W. Each has its own inverter, delivering 96% to the grid, or 468 W. The total is 4680 W. This is 1.6% more than the case in Fig. 1.38.

In addition to delivering the highest power, scenario c) involves one converter per panel and is especially easy for addition or subtraction of panels. In a) and b), the system really does require 10 panels to make the inverter efficient. In c), there is nothing special about the number of panels, and they can be used one at a time or in groups.

Problem 1.30

Elements of Power Electronics, 2nd edition. New York: Oxford University Press, 2015. © 2015 Philip T. Krein. All rights reserved. Use and reproduction is limited to authorized instructors registered with the publisher, Oxford University Press. Unauthorized use is prohibited.

A wind turbine is rated to produce 1.5 MW. Two different power approaches are being explored. In the first, the turbine output is converted to 750 V dc, distributed to a combiner that brings together 10 such units, and then connected to an inverter for grid power. In the second, the turbine output is stepped up to 15 kV (line-to-line rms), three-phase ac power, and then connected directly into power distribution. What currents are needed for the single turbine in each case and for the group of 10 in the first case? Comment on the approaches.

For the first case, a turbine delivering 1.5 MW into a 750 V bus is sending 1.5 MW/750 V = 2000 A. the combiner will be rated for 20000 A.

For the second case, in a three-phase system, as in eq. (D.14), the delivered power without phase shift is $\sqrt{3} \times V_L I_L$. At 15 kV and 1.5 MW, the current (given zero phase shift) will be 1.5 MW/($\sqrt{3}$ x 15000) = 7.7 A rms, 81.6 A peak. Even if there is some phase shift, the peak current is likely to be less than 100 A.

In electrical distribution, the size of copper is related to current flow. Any loss goes as I^2. This is why the ac power grid uses high voltage for transmission and distribution, stepping down to low voltage only close to a customer site. It makes sense in wind distribution to step up the voltage prior to any external electrical connections. A strategy like this will probably be more efficient (less loss) and lower in cost (less copper).

Problem 1.31

Elements of Power Electronics, 2nd edition. New York: Oxford University Press, 2015. © 2015 Philip T. Krein. All rights reserved. Use and reproduction is limited to authorized instructors registered with the publisher, Oxford University Press. Unauthorized use is prohibited.

An ocean wave system is operating. The waves can be modeled as having sinusoidal motion, with a peak-to-peak displacement of 1 m and a period of 5 s. A wave conversion device is used that is anchored to the ocean floor and uses a large float to follow the wave motion and drive a generator. If the generator delivers 250 kW of peak power, how much peak force is produced? The output is rectified and then inverted for connection to the grid. If available power electronic devices rated up to 500 A (peak) are available, what voltage do you suggest for the rectifier output?

The displacement y(t) has been described to follow

$y(t) = 0.5 \sin(0.4 \pi t)$ in meters

(This waveform has 1 m peak-to-peak variation and a frequency of 0.2 Hz.) The velocity is the derivative of this,

$dy/dt = 0.2 \pi \cos(0.4 \pi t)$ m/s

The peak speed is $0.2 \pi = 0.628$ m/s.

Power is force x speed, so if the peak power is 250000 W and the peak speed is 0.628 m/s, then the peak force is 250000/0.628 = 398 kN

If the peak current is not to exceed 500 A and the peak power is 250000 W = V x I, then a target voltage of about 500 V should be used in this situation. This is a little bit simplified since the electrical conversion might involve three phase, but in the ocean wave context the very low frequencies mean the devices are large and it is very hard to fill in power peaks and valleys. One strategy is to link together many such devices, each separated to give different phases of displacement. The intent is to try to achieve constant total power to the grid, as in equations (D.4) and (D.5) in the Appendix.

Problem 1.32

Elements of Power Electronics, 2nd edition. New York: Oxford University Press, 2015. © 2015 Philip T. Krein. All rights reserved. Use and reproduction is limited to authorized instructors registered with the publisher, Oxford University Press. Unauthorized use is prohibited.

A certain hybrid electric automobile uses a 200 V battery pack that can store 10 kW-h of energy. The battery pack is stepped up to 700 V with a boost converter and then delivered to a three-phase inverter like the one in Figure 1.45. In highway driving, the car uses energy at the rate of 20 kW. With the engine off, what battery current do you expect in this case? What inverter input current do you expect? The car uses up to 100 kW for acceleration, although only for a few moments. What currents will flow in these cases? What device current ratings will be needed for the boost converter?

With the engine off, all power will be imposed on the inverter and battery. If the losses are very low, each device must supply 20 kW. For a 200 V battery, this requires 100 A. For the inverter operating from a 700 V bus, this is 29 A.

If the electrical system is required to supply up to 100 kW for acceleration (a plausible scenario in some "range extender" hybrid architectures), the battery will have to supply 500 A and the inverter will draw 143 A from its input bus. Devices inside the dc-dc converter in between the two components will need to be rated for at least 700 V and at least 500 A. A 500 A rating level will be sought.

Problem 1.33

Elements of Power Electronics, 2nd edition. © 2015, Philip T. Krein. All rights reserved. Use and reproduction limited to authorized instructors registered with the publisher. Unauthorized use is prohibited.

A subway car draws power from a sliding contact on a third rail at 750 V. The motors require up to 500 kW total in severe situations. How much current must the sliding contact be rated for? If it is desired to lose less than 1 kW (0.2%) in the sliding contact, what is the maximum allowed value of contact resistance?

At 500 kW and 750 V, the current is 500000/750 = 667 A.

The contact loss is to be less than 1000 W. This can be represented as an I^2R loss in the contact. With P = 1000 W and I = 667 A, the R value must not exceed 0.00225 ohms to achieve the loss.

Contact resistance below 2.25 mΩ is not easy to achieve!

Problem 2.1

Elements of Power Electronics, 2nd edition.© 2015, Philip T. Krein. All rights reserved.Use and reproduction limited to authorized instructors registered with the publisher.Unauthorized use is prohibited.

Draw the switch matrix for the most general single-phase ac-to-dc converter. How many switches are in this matrix?

There are four switches in this general case.

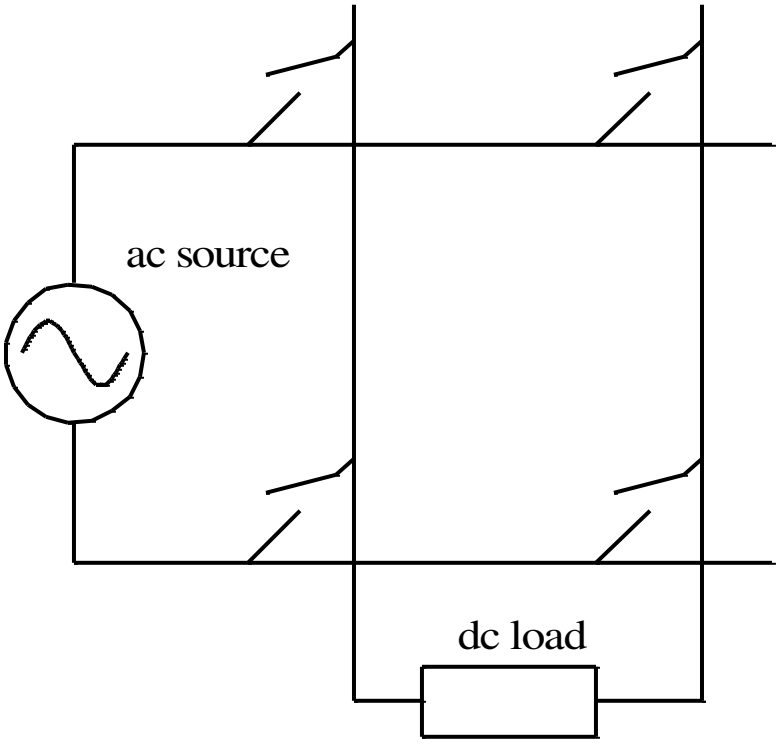

Problem 2.2

Elements of Power Electronics, 2nd edition.© 2015, Philip T. Krein. All rights reserved.Use and reproduction limited to authorized instructors registered with the publisher.Unauthorized use is prohibited.

A dc–dc converter has a current source connected between the input terminals. Assume that some sort of electrical load appears across the output lines. Of the four switches, what combinations can be operated without violating the KCL restriction?

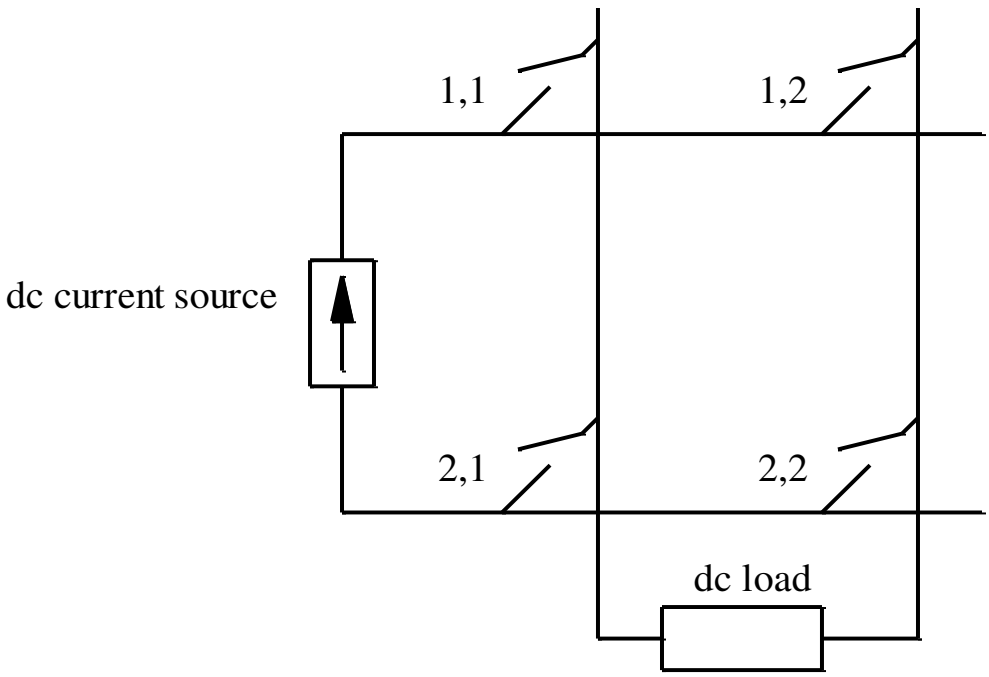

In this case only the KCL constraints are sought and the load requirements are not specified. KCL requires a current path. This in turn means that at least one switch must be on in each row. The allowed combinations based on KCL are:

1,1 on and 2,1 on

1,1 on and 2,2 on

1,2 on and 2,1 on

1,2 on and 2,2 on

Any three on

All four on

Written in terms of switching functions, $q_{1,1} + q_{1,2} \geq 1$ and $q_{2,1} + q_{2,2} \geq 1$.

Problem 2.3

Elements of Power Electronics, 2nd edition.© 2015, Philip T. Krein. All rights reserved.Use and reproduction limited to authorized instructors registered with the publisher.Unauthorized use is prohibited.

A switch matrix converts ac to dc. The input is a four-phase ac voltage source, while the output is a dc current source.

a. Draw the converter and label the switches.

b. State the KVL restrictions in terms of the switching functions.

c. State the KCL restrictions in terms of the switching functions.

d. Naturally, both KVL and KCL restrictions must be met. State this combined requirement in terms of the switching functions.

(a) Here is a drawing with conventional matrix labels. Notice that the common neutral also requires switch connections.

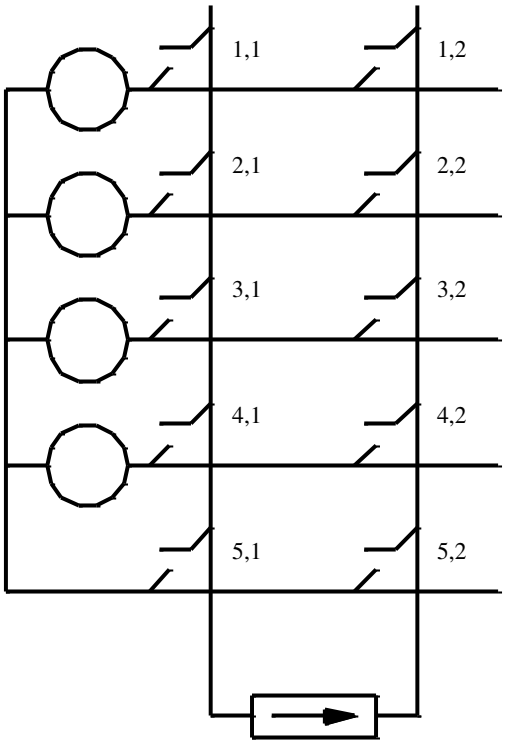

(b) KVL requires that unlike voltages do not become connected. This means that at most one switch in each column is allowed on at any time. In terms of switching functions,

$q_{1,1} + q_{2,1} + q_{3,1} + q_{4,1} + q_{5,1} \leq 1$ and $q_{1,2} + q_{2,2} + q_{3,2} + q_{4,2} + q_{5,2} \leq 1$

(c) KCL requires a current path, so at least one switch must be on in each column,

$q_{1,1} + q_{2,1} + q_{3,1} + q_{4,1} + q_{5,1} \geq 1$ and $q_{1,2} + q_{2,2} + q_{3,2} + q_{4,2} + q_{5,2} \geq 1$

(d) Only one value simultaneously satisfies both: the switches in each column must be mutually exclusive such that

$q_{1,1} + q_{2,1} + q_{3,1} + q_{4,1} + q_{5,1} = 1$ and $q_{1,2} + q_{2,2} + q_{3,2} + q_{4,2} + q_{5,2} = 1$

Problem 2.4

Elements of Power Electronics, 2nd edition.
© 2015, Philip T. Krein. All rights reserved. Use and reproduction limited to authorized instructors registered with the publisher. Unauthorized use is prohibited.

An ac-ac single-phase to single-phase converter is shown in Figure 2.58. The input source has a frequency of 50 Hz. The switching functions have a frequency of 80 Hz and a duty cycle of one-half. Plot the output voltage waveform. What is the frequency of this waveform?

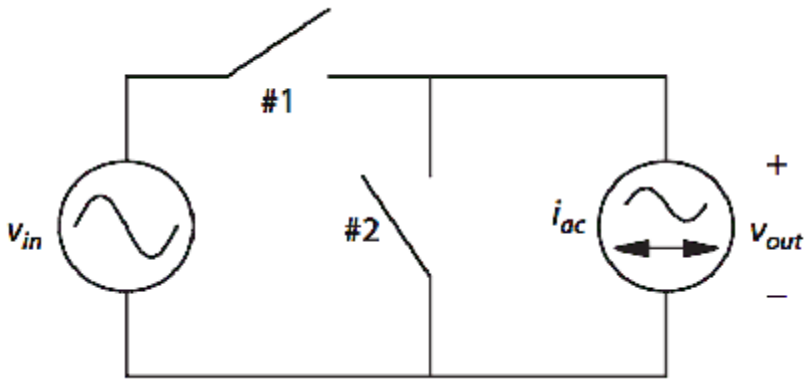

Define the input voltage, just with an amplitude of 1.

$\omega in := 2\cdot\pi\cdot 50$

$vin(t) := \cos(\omega in\cdot t)$

There are many ways to generate a switching function pulse sequence. This one uses Heaviside's step function to give an output of 1 with a sinusoid is high and 0 when it is low.

$\omega switch := 2\cdot\pi\cdot 80$

$q(t) := \Phi(\cos(\omega switch\cdot t))$

In this converter, the output matches the input when switch #1 is on and is 0 when it is off. Therefore,

$vout(t) := q(t)\cdot vin(t)$

Now plot the results.

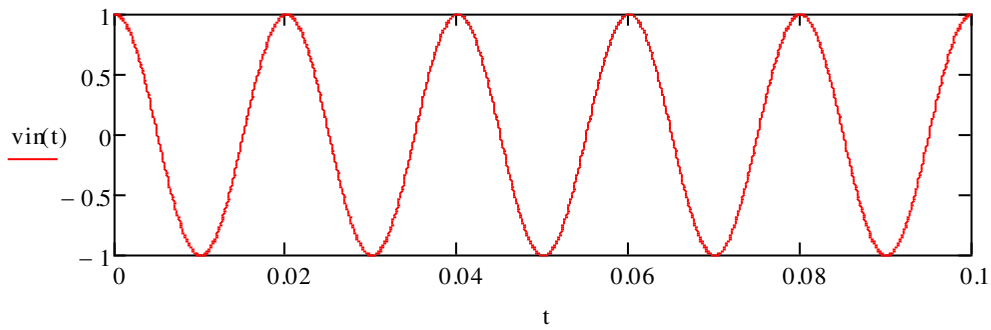

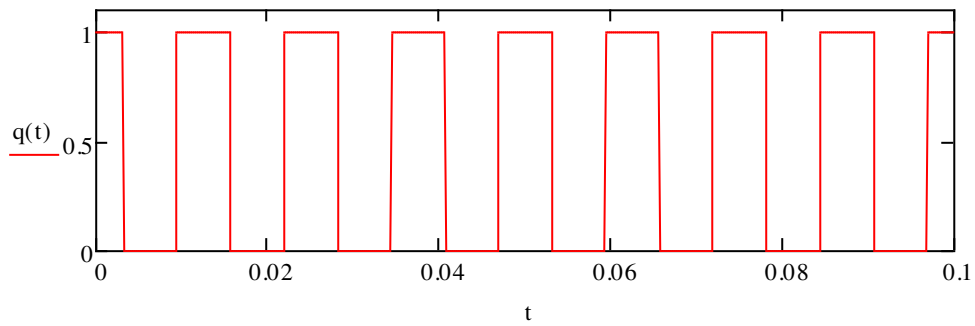

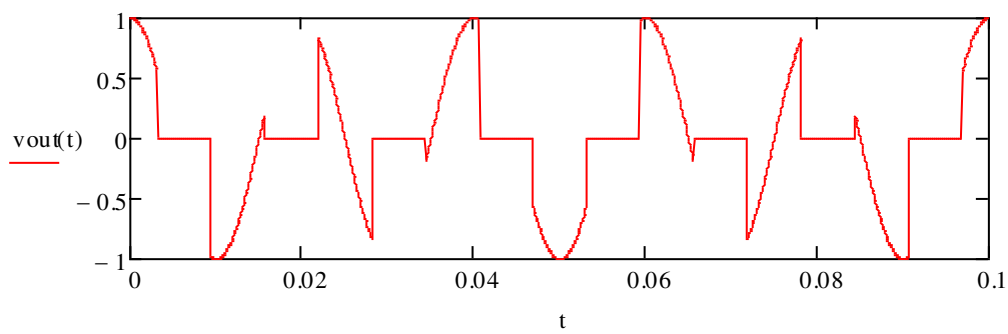

This waveform repeats every 0.1 s, and therefore has a frequency of 10 Hz. (Notice that 10 is the greatest common divisor of 50 and 80.)

Problem 2.5

Elements of Power Electronics, 2nd edition.
© 2015, Philip T. Krein. All rights reserved. Use and reproduction limited to authorized instructors registered with the publisher. Unauthorized use is prohibited.

A three-phase rectifier is shown in Figure 2.59. The current I_{out} is constant. It is proposed to turn each switch on when the corresponding voltage is positive, so switch *a* turns on when $V_a > 0$ and so on. Will this operating method meet requirements of KVL and KCL? If so, plot the switching function q_a and the voltage $V_{out}(t)$. If not, discuss the problem and propose a solution.

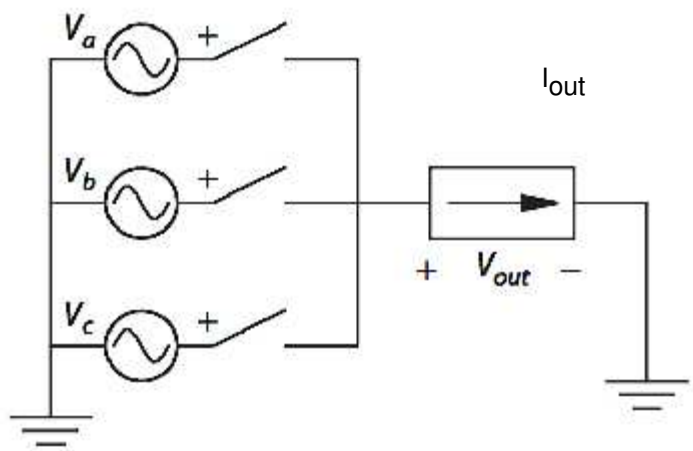

To satisfy KVL and KCL, the three switches must be mutually exclusive such that $\sum_{i=1}^{3} q_i = 1$

The stated strategy has each switch on when the associated voltage is positive, but each is positive half of each cycle, so there would be many times when two switches are on together. This violates KVL (although not KCL).

What can resolve this issue? With three switches the obvious choice is to turn each on 1/3 of a cycle, staggered in time to avoid any overlap. There are several alternatives:

1. Turn a switch on when its associated voltage is highest (this is the same as Prob. 2.6).
2. Turn a switch on when its associated voltage peaks, and leave it on for 1/3 of a cycle.
3. Use only two switches, operating mutually exclusively.
4. Others ...

Let us illustrate #2.

Define three input voltages, just with an amplitude of 1.

Choose $\omega = 2\pi$ just as an example.

$\omega := 2\cdot\pi$ $\quad va(t) := \cos(\omega\cdot t)$ $\quad vb(t) := \cos\left(\omega\cdot t - \frac{2\cdot\pi}{3}\right)$ $\quad vc(t) := \cos\left(\omega\cdot t + \frac{2\cdot\pi}{3}\right)$

Set up q1 to turn on at t=0 and stay on 1/3 of a cycle. In this example, the period is 1 s and time modulo each period can be employed to set up q(t). (Here the time is shifted up one cycle to avoid and ambiguity during the first cycle.)

$$q1(t) := \text{if}\left(\text{mod}(t+1,1) > \frac{1}{3}, 0, 1\right) \qquad q2(t) := q1\left(t - \frac{1}{3}\right) \qquad q3(t) := q1\left(t - \frac{2}{3}\right)$$

Here are the voltages:

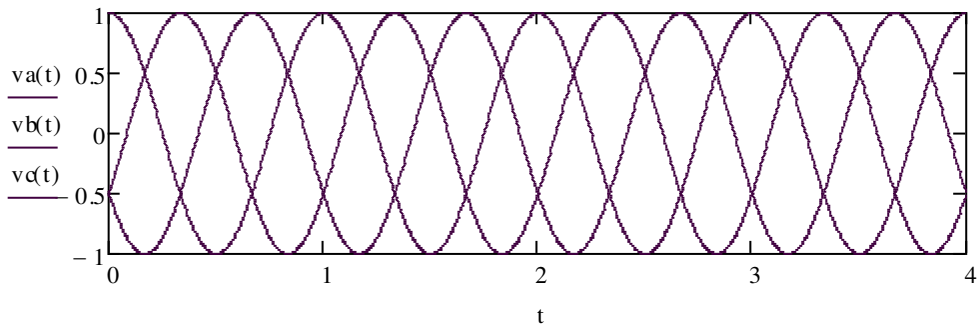

Check the switching functions:

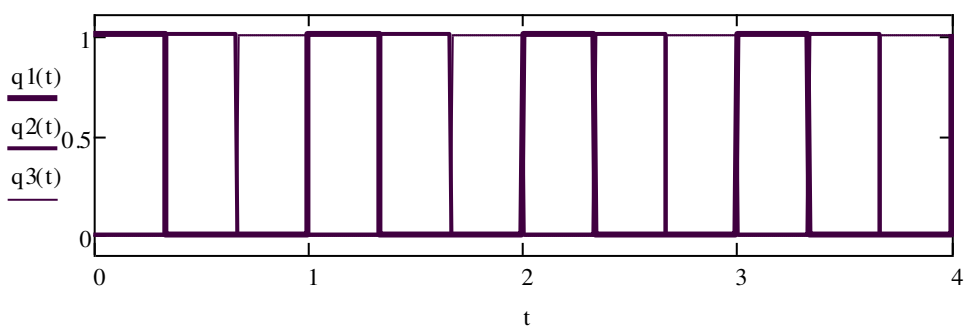

Define the output:

$$vout(t) := q1(t)\cdot va(t) + q2(t)\cdot vb(t) + q3(t)\cdot vc(t)$$

Plot the output overlaid on the input to show the timing.

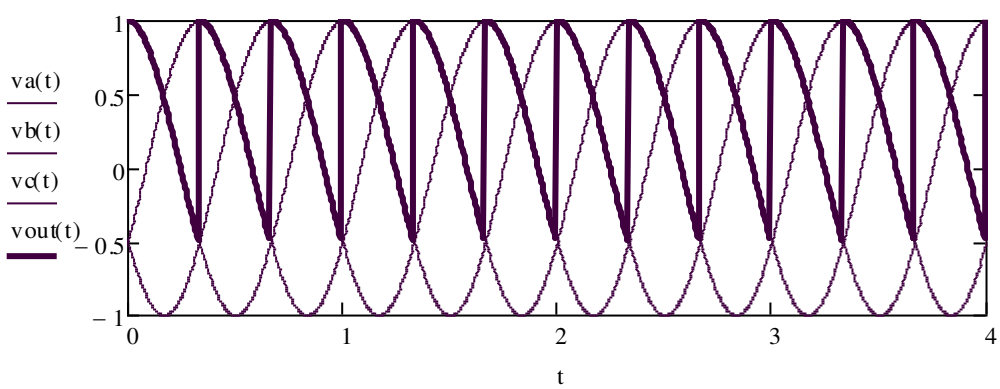

Problem 2.6

Elements of Power Electronics, 2nd edition.
© 2015, Philip T. Krein. All rights reserved. Use and reproduction limited to authorized instructors registered with the publisher. Unauthorized use is prohibited.

An ac– dc converter is shown in Figure 2.59. Iout has a constant, positive value. This is a " midpoint converter" because of the use of a neutral. The switches function as ideal diodes and are
ON for Iswitch > 0 OFF for Vswitch < 0
Given: Va(t) = V0 cos(ω t), Vb = V0 cos(ω t − 2π /3), Vc = V0 cos(ω t + 2π /3)
a. Plot Vout(t) on some three-phase graph paper.
b. Compute the average value of Vout(t).
c. Sketch the switching function for switch a.

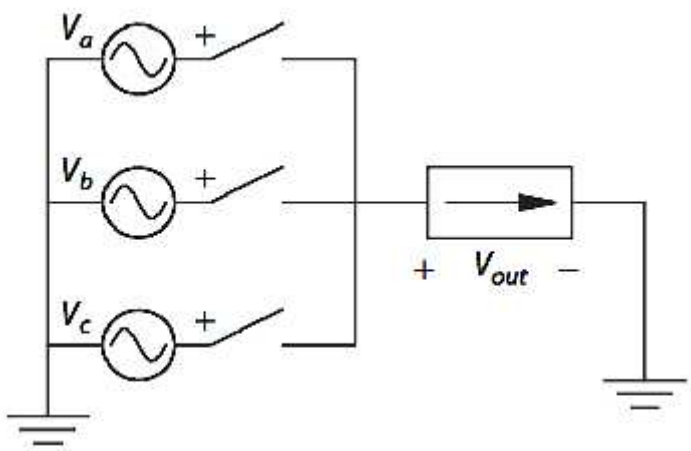

Define three input voltages, just with an amplitude of 1.

Choose ω = 2π just as an example.

$\omega := 2\cdot\pi$

$va(t) := \cos(\omega\cdot t)$

$vb(t) := \cos\left(\omega\cdot t - \frac{2\cdot\pi}{3}\right)$

$vc(t) := \cos\left(\omega\cdot t + \frac{2\cdot\pi}{3}\right)$

The diode properties are such that the on switch at any given moment is the one associated with the highest input voltage.

$$vout(t) := max(va(t), vb(t), vc(t))$$

Here is some three-phase "paper" with the output in bold.

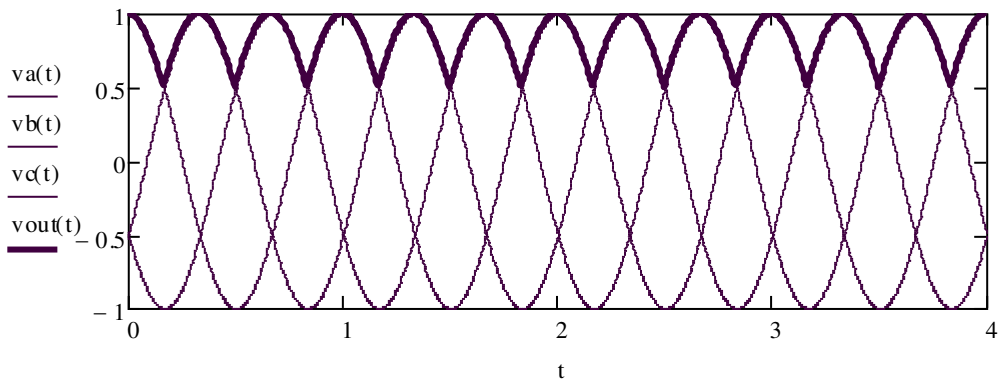

What is the average value? The waveform is periodic with a period 1/3 that of each input. Define a change of variables θ = ω t, then the period is 2π /3 radians and the average becomes

$$voutave = \frac{1}{T} \cdot \int_0^T vout(t)\, dt$$

By symmetry, this can be computed by doubling the integral of va(t) through an angle 2π /6,

$$voutave = 2 \cdot \frac{3}{2 \cdot \pi} \cdot \int_0^{2 \cdot \frac{\pi}{6}} V_0 \cdot \cos(\theta)\, d\theta$$

which is

$$voutave = \frac{3 \cdot \sqrt{3}}{2 \cdot \pi} \cdot V_0$$

the numerical value is

$$\frac{3 \cdot \sqrt{3}}{2 \cdot \pi} = 0.827$$ times V_0.

The switching function associated with voltage a is high when that phase is connected and off otherwise. This means:

$$qa(t) := if(va(t) = vout(t), 1, 0)$$

Plot this to see a switching function that is on 1/3 of each cycle.

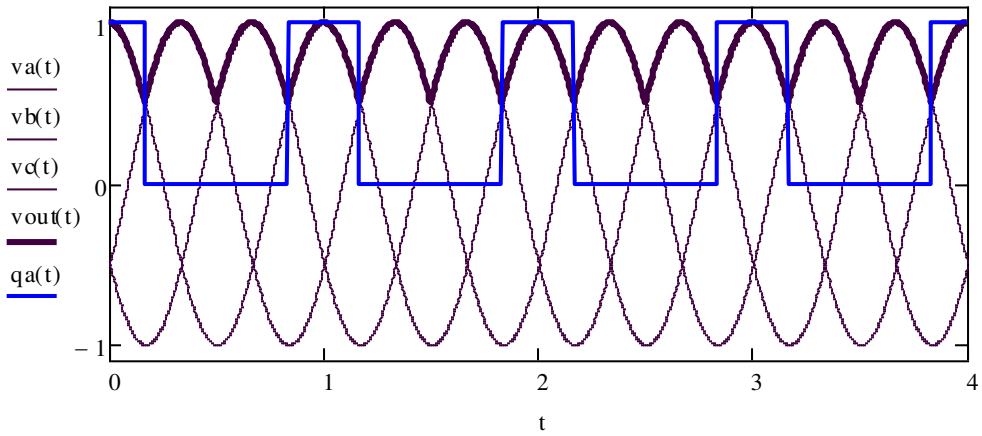

Problem 2.7

Elements of Power Electronics, 2nd edition. © 2015, Philip T. Krein. All rights reserved. Use and reproduction limited to authorized instructors registered with the publisher. Unauthorized use is prohibited.

Find V_{out} as a function of v_{in} for the circuit of Fig. 2.60, given identical resistors and any value of v_{in}.

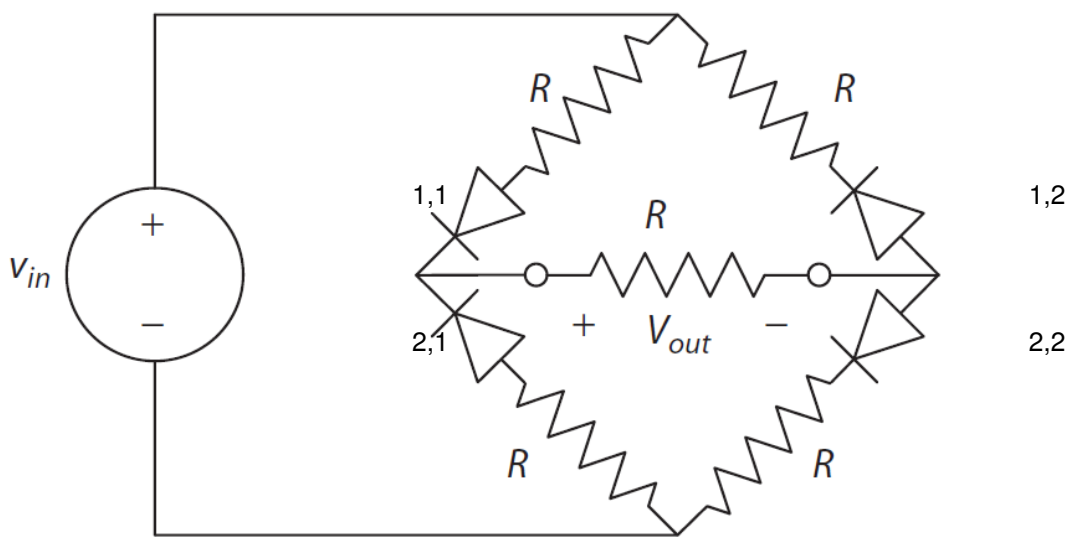

This is a trial method problem. Choose a configuration and test for consistency. The diodes have had numerical labels added above for convenience.

Although the circuit is basic, let us consider all 16 possible configurations quickly.

-- Configurations with exactly one device on. These are not consistent, because with only one device on no current can flow, and this is inconsistent with the diode property that i>0 when a device is on.
-- The configuration with 1,1 and 2,1 on. Not consistent because current cannot simultaneously flow in two different directions. This eliminates 1,2 and 2,2 as well.
-- Any configuration with three devices on will be inconsistent with KCL.
-- The configuration with 1,1 and 1,2 on. Since this would create a loop without a voltage source, the current would be 0, inconsistent with "on" diodes. This eliminates 2,1 and 2,2 as well.

There are four remaining configurations: all off, all on, and diagonal pairs on. In the "all off" case, the configuration is never consistent because at least one device will see a positive forward voltage bias for any non-zero value of input. The "all on" configuration is not consistent with KCL since not all four devices will ever carry positive current.

Only two configurations remain to be tested:
1,1 and 2,2 on. This configuration will be consistent when $i > 0$ and when 2,1 and 1,2 have negative forward bias. The conditions are consistent when $v_{in} > 0$. In this case, the output is $v_{in}/3$ based on the resistive divider.

1,2 and 2,1 on. This configuration will be consistent when $v_{in} < 0$. The output will still be positive.

The final result allows only two configurations, and produces an output given by:

$$V_{out} = |v_{in}|/3$$

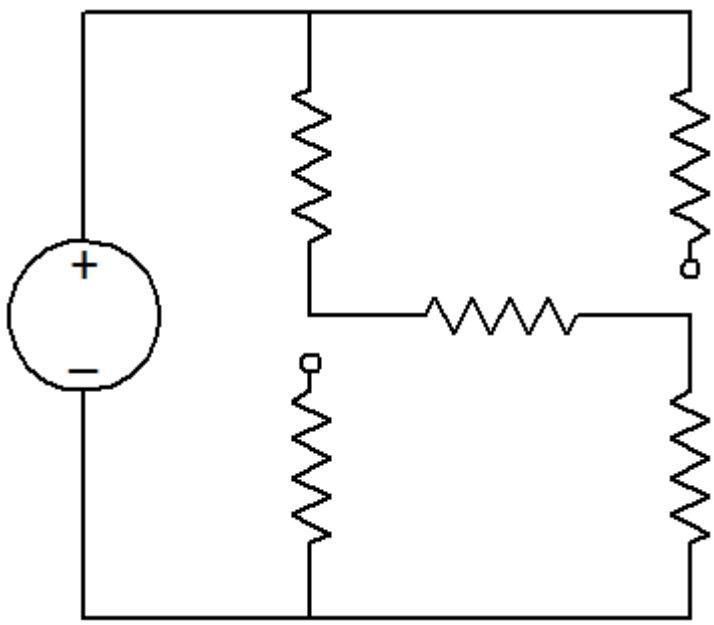

1,1 and 2,2 on

Please recognize that a careful solution will involve drawing the circuit multiple times.

Problem 2.8

Elements of Power Electronics, 2nd edition. © 2015, Philip T. Krein. All rights reserved. Use and reproduction limited to authorized instructors registered with the publisher. Unauthorized use is prohibited.

Find V_{out} as a function of v_{in} and V_{dc} for the circuit of Fig. 2.61, given identical resistors and any value of v_{in}.

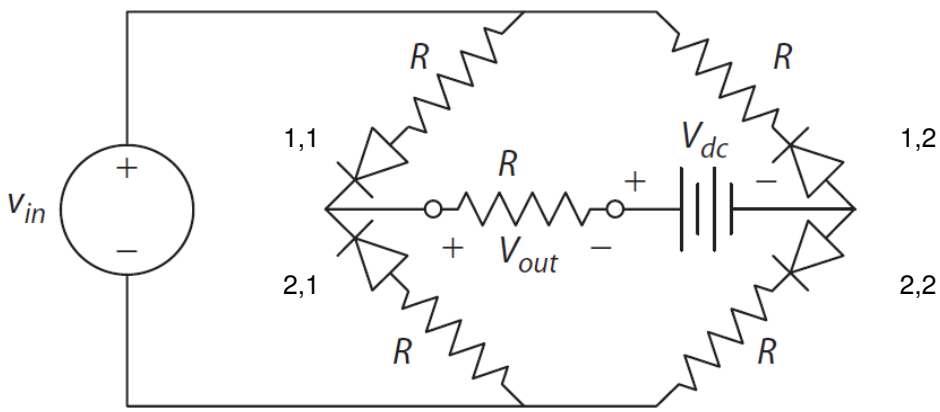

This is a trial method problem. Choose a configuration and test for consistency. The diodes have had numerical labels added above for convenience.

Although the circuit is basic, let us consider all 16 possible configurations quickly.

-- Configurations with exactly one device on. These are not consistent, because with only one device on no current can flow, and this is inconsistent with the diode property that i>0 when a device is on.
-- The configuration with 1,1 and 2,1 on. Not consistent because current cannot simultaneously flow in two different directions. This eliminates 1,2 and 2,2 as well.
-- Any configuration with three devices on will be inconsistent with KCL.
-- The configuration with 1,1 and 1,2 on. This would create a loop with a voltage source, but the current direction is inconsistent with the diode directions. This eliminates 2,1 and 2,2 as well.

There are four remaining configurations: all off, all on, and diagonal pairs on. The "all on" configuration is not consistent with KCL since not all four devices will ever carry positive current. We will come back to the "all off" case.

Two configurations remain to be tested:
1,1 and 2,2 on. This configuration will be consistent when $i > 0$ and when 2,1 and 1,2 have negative forward bias. The conditions are consistent when $v_{in} > V_{dc}$. In this case, the output is $(v_{in} - V_{dc})/3$ based on the resistive divider.

1,2 and 2,1 on. This configuration will be consistent when $v_{in} < -V_{dc}$. The output will still be positive.

In the case of $|v_{in}| < V_{dc}$, any possible current flow is inconsistent with the diode directions. This means the "all off" case applies in this situation, during which $V_{out} = 0$.

The final result allows three configurations, and produces an output given by:

$V_{out} = (|v_{in}| - V_{out})/3$ when $|v_{in}| > V_{dc}$, $V_{out} = 0$. otherwise

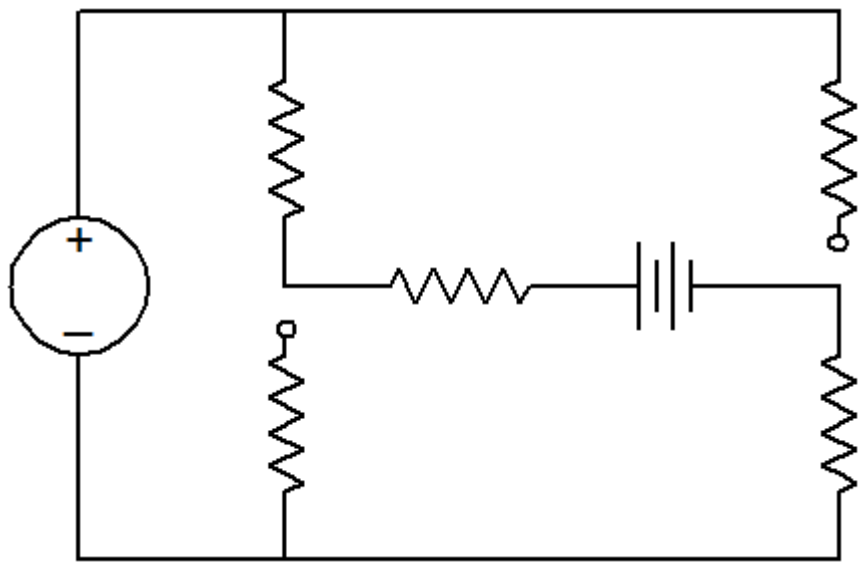

1,1 and 2,2 on

Please recognize that a careful solution will involve drawing the circuit multiple times.

Problem 2.9

Elements of Power Electronics, 2nd edition. © 2015, Philip T. Krein. All rights reserved. Use and reproduction limited to authorized instructors registered with the publisher. Unauthorized use is prohibited.

A dcdc converter has output voltage, input voltage, output current, and input current all ='2E 0.
a. Draw the switch matrix for this converter.
b. What types of restricted switches can be used for this converter?

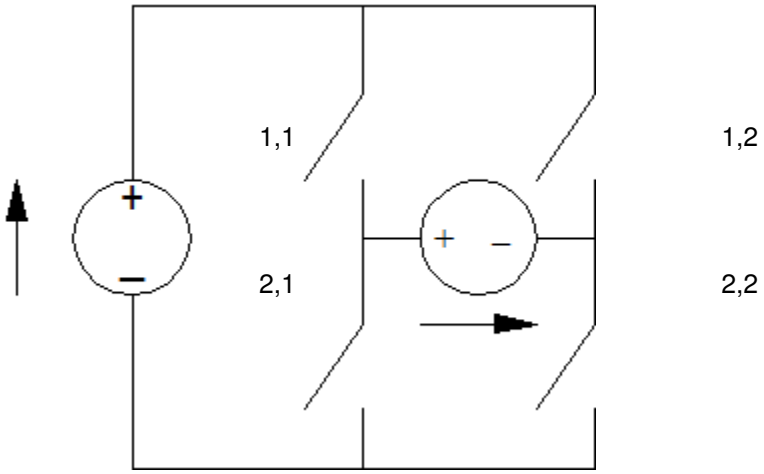

Notice that in this problem the general types of sources have not been defined. The drawing above with a switch matrix attempts to show generic polarities.
By KVL and KCL we know that both sources cannot be of the same type (voltage or current) but in this problem presumable the current and voltage sources could be connected arbitrarily.

The current directions are determined by the "on" state. Current can flow either from the input or output, depending on operating details. Switch 1,1 only carries positive input or output, so it only needs to be directed down. Switch 2,2 also carries only positive input or output and will be directed down. Switch 1,2 would be directed up to carry output current, but down to carry input current. Therefore it must carry bidirectional current in the most general case. The same applies to switch 2,1. The result based on currents is:

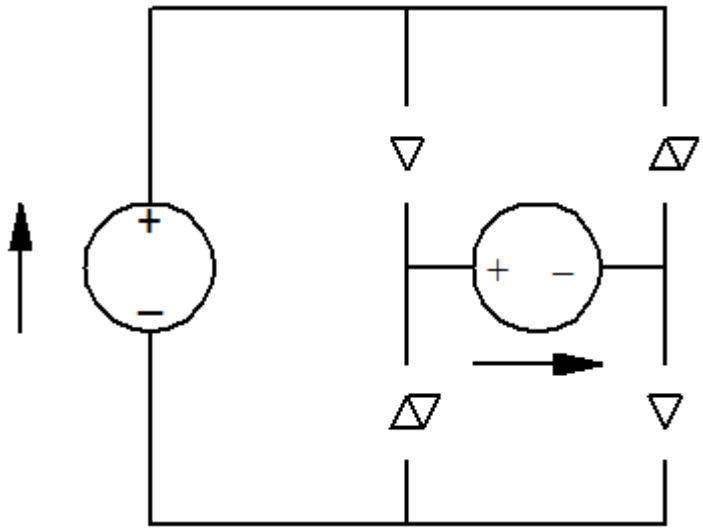

What about voltage? Switch 1,1 could be asked to block the input voltage when off. This would require a blocking "line" at the top. However, with switch 1,2 on, switch 1,1 could be required to block the output voltage, which would require reverse blocking. The same arguments apply to switch 2,2. Therefore both of these must block bidirectional voltage.

For switch 2,1, notice that any allowed switch configuration with 2,1 off will impose positive voltage at the upper terminal. This switch only blocks unipolar voltage as a result. The same argument applies to switch 1,2. The result is:

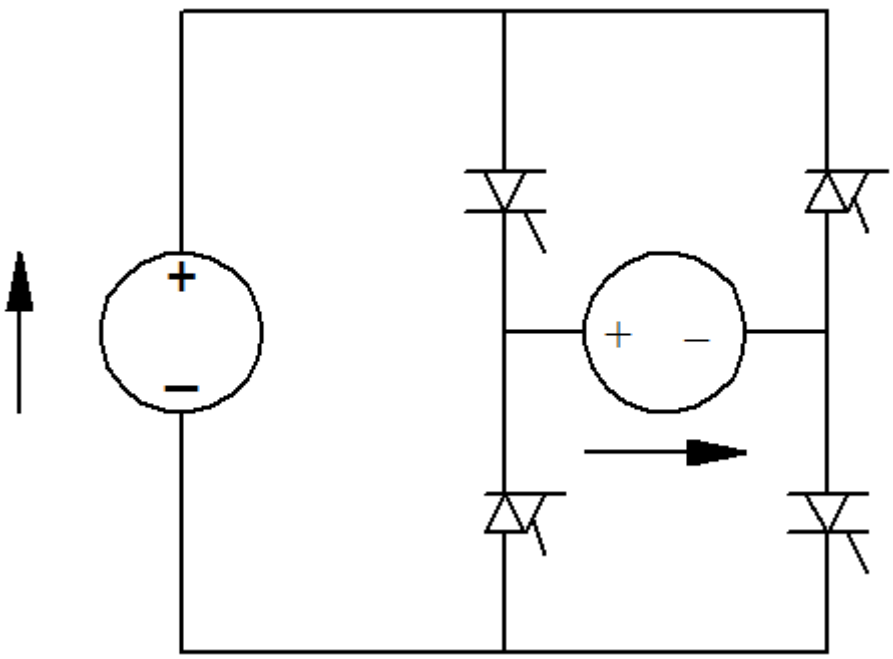

As shown, all four devices require gates. This switch matrix will be able to implement any unipolar dc-dc converter, whether the input is a voltage source (with output current source) or the input is a current source (output voltage source).

Many students may find it easier to try the two source cases and combine, as with the following:

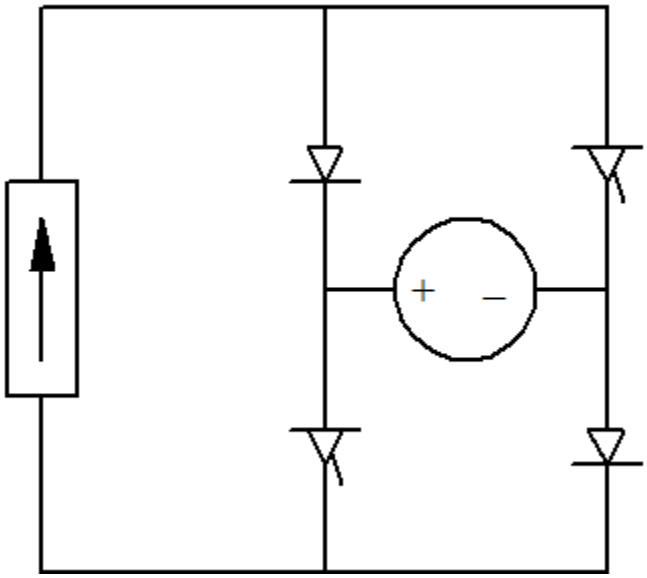

and

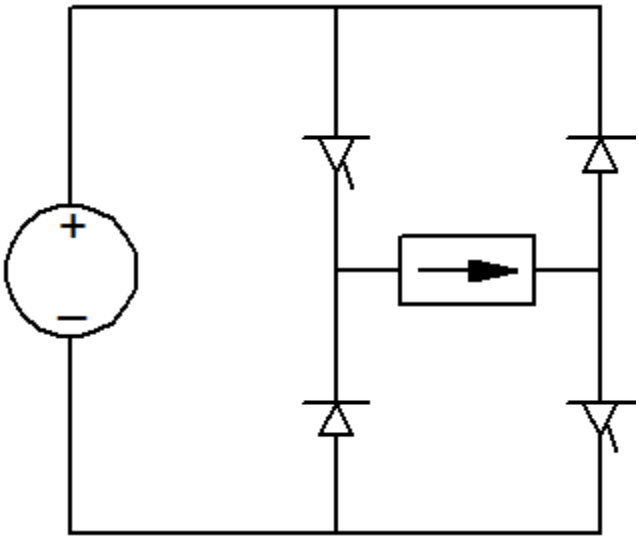

Problem 2.10

Elements of Power Electronics, 2nd edition. © 2015, Philip T. Krein. All rights reserved. Use and reproduction limited to authorized instructors registered with the publisher. Unauthorized use is prohibited.

A converter requires a forward-conducting forward-blocking switch. Which of the five restrictred switch types can implement this function? How can you tell?

The needed function is:

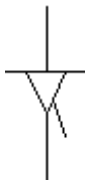

The five types, with analysis and comments, are:

No, a diode cannot support FCFB both because it does not block in the forward direction and because, without a gate, its action is not subject to designer control.

Yes, this is the target function

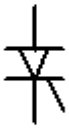

Yes, this device blocks in reverse, which is an unnecessary property, but it also provides the FCFB function and can be used.

Yes, this device carries in reverse, which is an unnecessary property, but it has the FCFB function in the forward direction and can be used.

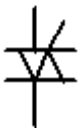

Yes, the complete ideal switch can be employed for any of the other functions since it can carry or block in either direction.

The point here is that if additional information is added to define reverse performance in an application requiring an FCFB switch, the information is not a problem. Four of the five types can be used in a location that requires an FCFB switch.

Problem 2.11

Elements of Power Electronics, 2nd edition. © 2015 Philip T. Krein. All rights reserved. Use and reproduction is limited to authorized instructors registered with the publisher, Oxford University Press. Unauthorized use is prohibited.

Any of the five possible restricted switches can be constructed from combinations of IGBTs and diodes. See if you can design ways to assemble each of the switch types solely from diode and transistor combinations. (Hint: The restricted switch symbols for the devices are helpful here.)

FCRB: diode alone

FCFB: IGBT alone

FCBB: IGBT with series diode

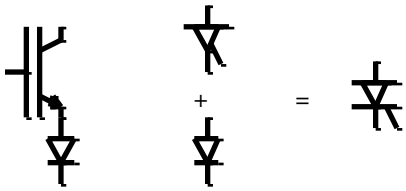

BCFB: IGBT with reverse diode

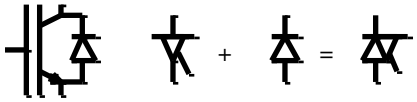

BCBB options (there are others):
1. two BCFB devices in reverse series

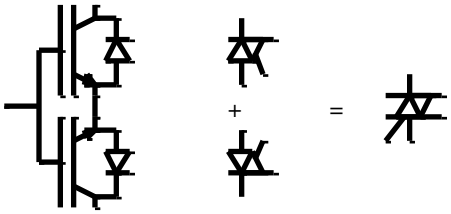

2. two FCBB devices in reverse parallel

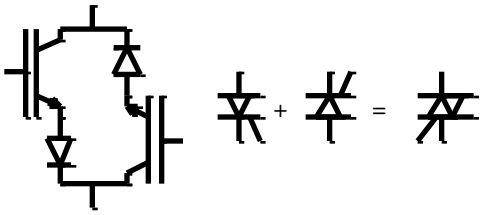

Problem 2.12

Elements of Power Electronics, 2nd edition. © 2015 Philip T. Krein. All rights reserved. Use and reproduction is limited to authorized instructors registered with the publisher, Oxford University Press. Unauthorized use is prohibited.

Within one period, a switching function has a value of 1 between t0-DT/2 and t0+DT/2, and 0 otherwise. Let us insert these into the Fourier series definitions, and obtain the various coefficients.
This summary sheet does not mean that Maple did all the work. Certain trig identities had to be added by hand to get better simplification. Examples include expressions for sin(2θ) and cos(2θ).

$$a_0 = \frac{1}{T}\cdot\int_{t0-D\cdot\frac{T}{2}}^{t0+D\cdot\frac{T}{2}} 1\,dt$$

$$a_0 = D$$

$$b_0 = 0$$

$$a_n = \frac{2}{T}\cdot\int_{t0-D\cdot\frac{T}{2}}^{t0+D\cdot\frac{T}{2}} 1\cdot\cos\left(\frac{n\cdot 2\cdot\pi}{T}\cdot t\right)dt$$

$$a_n = \frac{2}{T}\cdot\left[\frac{1}{2}\cdot\frac{\sin\left[n\cdot\pi\cdot\frac{(2\cdot t0 + D\cdot T)}{T}\right]}{(n\cdot\pi)}\cdot T - \frac{1}{2}\cdot\frac{\sin\left[n\cdot\pi\cdot\frac{(2\cdot t0 - D\cdot T)}{T}\right]}{(n\cdot\pi)}\cdot T\right]$$

$$a_n = \frac{\left[\sin\left[n\cdot\pi\cdot\frac{(2\cdot t0 + D\cdot T)}{T}\right] - \sin\left[n\cdot\pi\cdot\frac{(2\cdot t0 - D\cdot T)}{T}\right]\right]}{(n\cdot\pi)}$$

$$b_n = \frac{2}{T}\cdot\int_{t0-D\cdot\frac{T}{2}}^{t0+D\cdot\frac{T}{2}} 1\cdot\sin\left(\frac{n\cdot 2\cdot\pi}{T}\cdot t\right)dt$$

$$b_n = \frac{2}{T}\cdot\left[\frac{-1}{2}\cdot\frac{\cos\left[n\cdot\pi\cdot\frac{(2\cdot t0 + D\cdot T)}{T}\right]}{(n\cdot\pi)}\cdot T + \frac{1}{2}\cdot\frac{\cos\left[n\cdot\pi\cdot\frac{(2\cdot t0 - D\cdot T)}{T}\right]}{(n\cdot\pi)}\cdot T\right]$$

$$b_n = \frac{4}{(n\cdot\pi)}\cdot\sin(n\cdot\pi\cdot D)\cdot\sin\left(n\cdot\frac{\pi}{T}\cdot t0\right)\cdot\cos\left(n\cdot\frac{\pi}{T}\cdot t0\right)$$

$$c_n = \sqrt{(a_n)^2 + (b_n)^2}$$

$$c_0 = D$$

$$c_n = \sqrt{(a_n)^2 + (b_n)^2}$$

$$c_n = \sqrt{\left[\frac{\sin\left[n\cdot\pi\cdot\frac{(2\cdot t0 + D\cdot T)}{T}\right]}{(n\cdot\pi)} - \frac{\sin\left[n\cdot\pi\cdot\frac{(2\cdot t0 - D\cdot T)}{T}\right]}{(n\cdot\pi)}\right]^2 + \frac{16}{\left(n^2\cdot\pi^2\right)}\cdot\sin(n\cdot\pi\cdot D)^2\cdot\sin\left(\frac{n\cdot\pi}{T}\cdot t0\right)^2\cdot\cos\left(\frac{n\cdot\pi}{T}\cdot t0\right)^2}$$

$$c_n = 2\cdot\frac{\sqrt{1-\cos(n\cdot\pi\cdot D)^2}}{(n\cdot\pi)} \qquad c_n = \frac{2\cdot\sqrt{\sin(n\cdot\pi\cdot D)^2}}{n\cdot\pi} \qquad c_n = \frac{2\cdot\sin(n\cdot\pi\cdot D)}{n\cdot\pi}$$

Q.E.D.

$$\theta_n = -\mathrm{atan}\left(\frac{b_n}{a_n}\right) \qquad \theta_n = -\mathrm{atan}\left[2\cdot\sin\left(n\cdot\frac{\pi}{T}\cdot t0\right)\cdot\frac{\cos\left(n\cdot\frac{\pi}{T}\cdot t0\right)}{\left(2\cdot\cos\left(n\cdot\frac{\pi}{T}\cdot t0\right)^2 - 1\right)}\right]$$

$$\theta_n = -\mathrm{atan}\left(\tan\left(2\cdot n\cdot\pi\cdot\frac{t0}{T}\right)\right) \qquad \theta_n = -2\cdot n\cdot\pi\cdot\frac{t0}{T} \qquad \theta_n = -n\cdot\omega\cdot t0$$

Q.E.D.

Summary: $q(t) = D + \frac{2}{\pi}\cdot\sum_{n=1}^{\infty}\left(\frac{\sin(n\cdot\pi\cdot D)}{n}\cdot\cos(n\cdot\omega\cdot t - n\cdot\omega\cdot t0)\right)$

Notice that the solution can be made much more direct if one is willing to time shift the waveform. Shifting by an interval t0 yields:

$$a_0 = \frac{1}{T}\cdot\int_{-D\cdot\frac{T}{2}}^{D\cdot\frac{T}{2}} 1\,dt \qquad a_n = \frac{2}{T}\cdot\int_{-D\cdot\frac{T}{2}}^{D\cdot\frac{T}{2}} 1\cdot\cos\left(\frac{n\cdot 2\cdot\pi}{T}\cdot t\right)dt$$

By symmetry:

$$b_n = 0$$

$$a_0 = D \qquad a_n = 2\cdot\frac{\sin(D\cdot n\cdot\pi)}{n\cdot\pi}$$

Then shift back again, substituting t-t0 for t to give the final form

$$q(t) = D + \frac{2}{\pi}\cdot\sum_{n=1}^{\infty}\left(\frac{\sin(n\cdot\pi\cdot D)}{n}\cdot\cos(n\cdot\omega\cdot t - n\cdot\omega\cdot t0)\right)$$

This is consistent if one defines $\theta_n = -n\cdot\omega\cdot t0$ Q.E.D.

Problem 2.13

Elements of Power Electronics, 2nd edition. © 2015 Philip T. Krein. All rights reserved. Use and reproduction is limited to authorized instructors registered with the publisher, Oxford University Press. Unauthorized use is prohibited.

This is a single-phase ac to dc converter. The matrix is 2x2.

Just for easy plotting, set up a voltage and frequency.

$V0 := 5 \qquad \omega := 1 \qquad vin(t) := V0\cos(\omega \cdot t)$

Set up two cycles in time for plots:

$tlast := 4\cdot\pi \qquad i := 0..2000 \qquad t_i := \frac{tlast}{2000}\cdot i$

Define the switching functions: $qa(t,\phi) := if(\cos(\omega\cdot t - \phi) > 0, 1, 0)$

$qb(t,\phi) := 1 - qa(t,\phi)$

$vout(t,\phi) := qa(t,\phi)\cdot vin(t) - qb(t,\phi)\cdot vin(t)$

Now some plots. Draw the voltage and the switching functions.

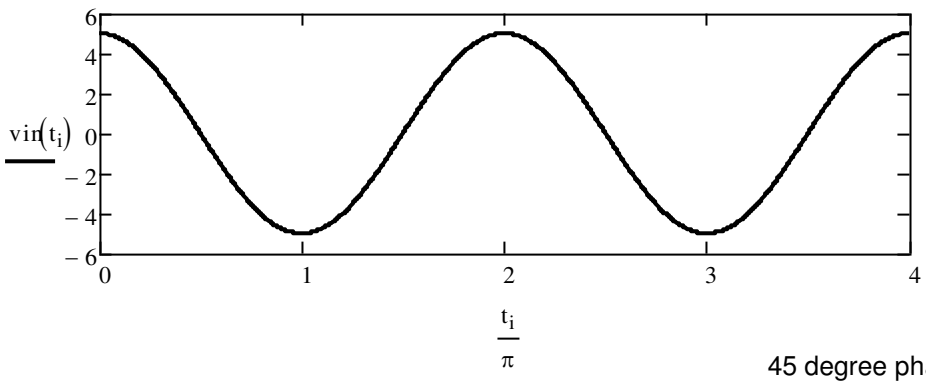

Zero phase

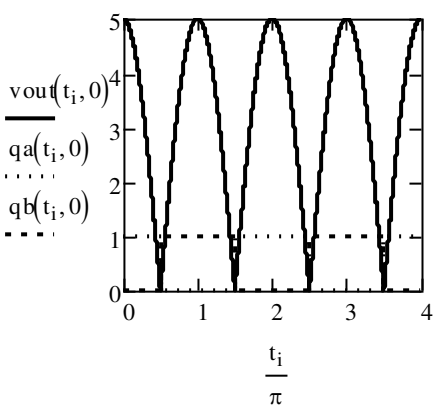

45 degree phase

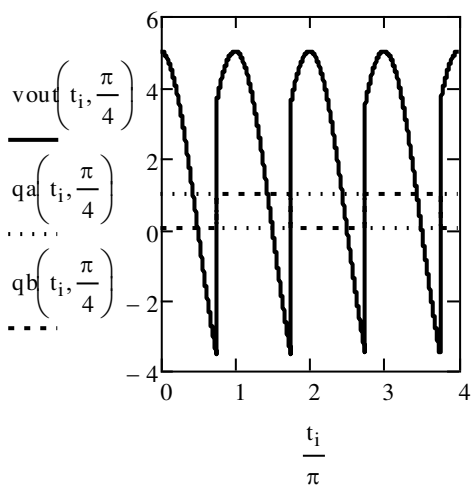

The output waveforms are in bold (V0 was set to 5 to help avoid too much overlap with q). The $q_{1,1} = q_{2,2}$ functions are dotted, and the $q_{2,1} = q_{1,2}$ functions are dashed.

```
(* Problem 2.14, P. T. Krein, Elements of Power Electronics,
2nd edition.  New York:  Oxford University Press, 2015.
© 2015 Philip T. Krein.  All rights reserved.  Use and
reproduction is limited to authorized instructors registered
with the publisher, Oxford University Press.  Unauthorized use
is prohibited.

This problem is to find the Fourier series of a rectified three
phase source (i.e. a three pulse sine wave).  The example here
is performed in Mathematica. *)

In[1]:=
 per=2 Pi/3; f=1/per; w=2 Pi f; th0=-per/2; thf=per/2
Out[1]:= π/3

 In[2]:=
 a0=(1/per) Integrate[v0 Cos[theta],{theta,th0,thf}]
 Out[2]:= (3 √3 v0)/(2 π)

In[3]:=
 an=(2/per) Integrate[v0 Cos[t] Cos[n w t],{t,th0,thf}]
Out[3]:= (3 v0 (√3 Cos[n π]-3 n Sin[n π]))/((1-9 n^2) π)

(* Set up a function to tabulate various values. *)
In[4]:=
 a[n_]=%
Out[4]:= (3 v0 (√3 Cos[n π]-3 n Sin[n π]))/((1-9 n^2) π)

In[5]:=
 a[1]
Out[5]:= (3 √3 v0)/(8 π)

In[6]:=
 a[2]
Out[6]:= -((3 √3 v0)/(35 π))

In[7]:=
 a[3]
Out[7]:= (3 √3 v0)/(80 π)

In[8]:=
 a[4]
Out[8]:= -((3 √3 v0)/(143 π))
```

2.15 a.

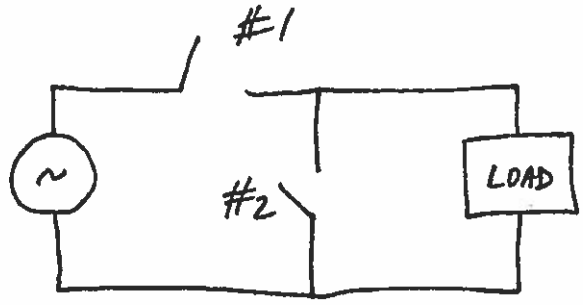

$$q_1 + q_2 = 1$$

b. LET $v_{in} = V_{in} \cos(2\pi 60\, t)$

q is at 10 kHz.

$P_{OUT} = P_{ave}$

FIRST, $v_{OUT}(t) = q(t)\, v_{in}(t)$

SINCE THERE IS NO LOSS, $P_{OUT} = P_{IN}$

THUS $P_{ave} = \left(\frac{V_{in}}{\sqrt{2}}\right)\left(\frac{I_{60in}}{\sqrt{2}}\right) \cos(\measuredangle V - \measuredangle I)$

WE DON'T REALLY KNOW THE POWER FACTOR ($\cos(\measuredangle V - \measuredangle I)$), BUT IF THE ANGLE IS SMALL, $P_{ave} = \frac{V_{in} I_{60in}}{2}$

$$I_{60in} = \frac{2 P_{ave}}{V_{in}}$$

OTHERWISE, $I_{60in} = \frac{2 P_{ave}}{V_{in} \cos(-\theta_{60})}$

Problem 2.16

Elements of Power Electronics, 2nd edition. © 2015 Philip T. Krein. All rights reserved. Use and reproduction is limited to authorized instructors registered with the publisher, Oxford University Press. Unauthorized use is prohibited.

This problem defines integral cycle control. The switching function q(t) is on for a cycle of Vin, then off for a cycle, and so on. If the switching function is sketched by hand, we notice three things:

1. The frequency of q(t) is 30 Hz.
2. The duty ratio is 1/2.
3. The phase is not zero. Instead, the center of the pulse occurs at $t = t_0 = 1/240$ s.

Since the switching function radian frequency is $2\pi\,30$ rad/s, and since the phase is defined as $\phi_0 = \omega t_0$, we can compute that $\phi_0 = 2\pi\,30/240 = \pi/4$ radians, or a 45 degree delay. This can be checked by using it to plot the results:

$V0 := 5$ (Set to 5 for easier-to-read plots.)

$vin(t) := V0\cos(2\cdot\pi\cdot 60\,t)$ $\quad q(t) := if\left(\cos\left(2\cdot\pi\cdot 30\,t - \frac{\pi}{4}\right) > 0, 1, 0\right)$ $\quad vout(t) := vin(t)\cdot q(t)$

Now, some plots: $tlast := 0.1$ $\quad i := 0..2000$ $\quad t_i := \frac{tlast}{2000}\cdot i$

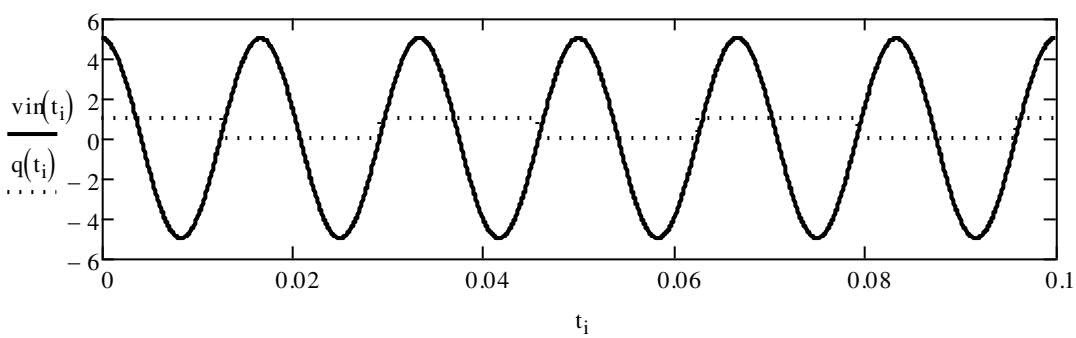

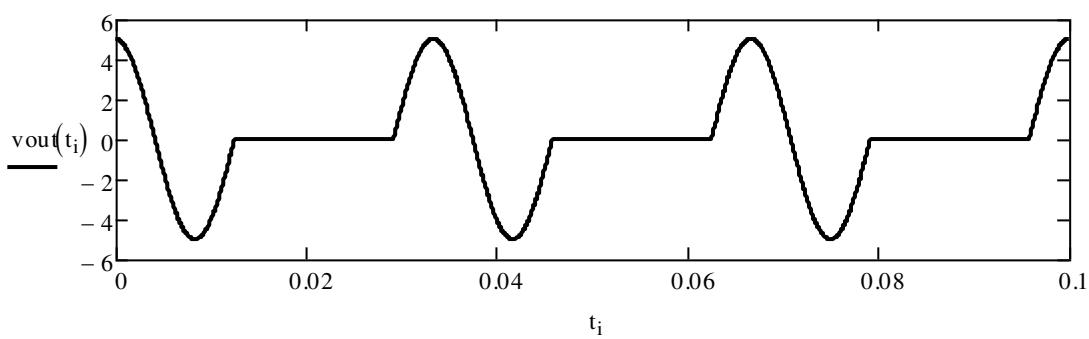

The correctness of the plots confirms that the right switching function was used. The switching function Fourier Series can be written directly, q(t) =

$$\frac{1}{2} + \frac{2}{\pi}\cdot\sum_{n=1}^{\infty}\left(\frac{\sin\left(n\cdot\frac{\pi}{2}\right)}{n}\cdot\cos\left(n\cdot 2\cdot\pi\cdot 30\cdot t - n\cdot\frac{\pi}{4}\right)\right)$$

Now, does this give the desired conversion? The symmetry suggests it does, but the non-zero phase raises some uncertainty. **The question is whether a 30 Hz component appears in the output voltage.** The dc term in q(t) does not do the job. What about various values of n?

$$vout(n,t) := \cos(2\cdot\pi\cdot 60\cdot t)\cdot\frac{2}{\pi}\cdot\frac{\sin\left(n\cdot\frac{\pi}{2}\right)}{n}\cdot\cos\left(n\cdot 2\cdot\pi\cdot 30\cdot t - n\cdot\frac{\pi}{4}\right)$$

This is not bad to check directly. We need the trig identity (A.5), which shows that the product of cosines gives a sum frequency term and a difference frequency term. For n = 1, the switching function term is at 30 Hz, while the input is at 60 Hz. The difference term will yield the desired 30 Hz component. For n=2, the term is zero. For n=3, the switching function term is at 90 Hz, so again the difference will yield 30 Hz at the output. For larger n, there can be no contribution to the 30 Hz component.

A second approach is direct Fourier analysis.
The period of the output is 1/30 s. Let us get the 30 Hz Fourier term explicitly.

$$per := \frac{1}{30}$$

$$a30 := \frac{2}{per}\cdot\int_{-\frac{1}{240}}^{\frac{3}{240}}\cos(2\cdot\pi\cdot 60\cdot t)\cdot\cos(2\cdot\pi\cdot 30\cdot t)\,dt \qquad a30 = 0.3001$$

$$b30 := \frac{2}{per}\cdot\int_{-\frac{1}{240}}^{\frac{3}{240}}\cos(2\cdot\pi\cdot 60\cdot t)\cdot\sin(2\cdot\pi\cdot 30\cdot t)\,dt \qquad b30 = -0.3001$$

$$c30 := \sqrt{a30^2 + b30^2} \qquad c30 = 0.4244 \qquad \theta 30 := -\mathrm{atan}\left(\frac{b30}{a30}\right) \qquad \theta 30 = 0.7854$$

$$\frac{\pi}{4} = 0.7854$$

There is a non-zero 30 Hz term, with amplitude 0.4244 V0 (that is 4/(3) times V0) and phase of $\pi/4$. This shows that power is indeed transferred into the 30 Hz current source. The converter does provide the desired action.

2.17 $V_{OUT} = q_1 V_{in}(t)$

The circuit might be

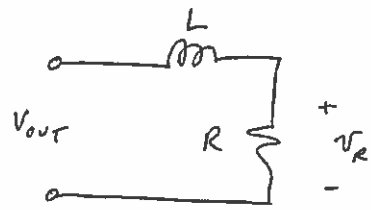

v_R IS THE FILTER OUTPUT. BY DEFINITION, THE FILTER'S CORNER FREQUENCY REQUIRES

$$\frac{1}{\omega_{CORNER}} = \frac{1}{2\pi f_{CORNER}} = \frac{L}{R}$$

$$V_{out}(t) = V_{in}\left(D_1 + \frac{2}{\pi}\sum \frac{\sin(n\pi D_1)}{n}\cos(n\omega(t-t_0))\right)$$

FOR THE n^{TH} COMPONENT, $\omega = 2\pi 50000$

$$v_{out_n}(t) = \frac{2V_{in}}{\pi}\frac{\sin(n\pi D)}{n}\cos[n\omega(t-t_0)]$$

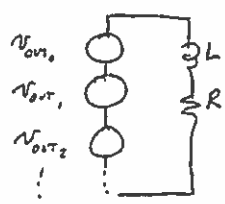

THERE IS A PHASOR,

$$\tilde{v}_n = \frac{2V_{in}}{\sqrt{2}\pi}\frac{\sin(n\pi D)}{n} \angle -n\omega t_0$$

THERE IS A FILTER OUTPUT PHASOR

$$\tilde{v}_{R_n} = \tilde{v}_n \frac{R}{R + jn\omega L}$$

NOW $L = \dfrac{R}{2\pi f_{CORNER}}$, SO

$$\tilde{v}_{R_n} = \tilde{v}_n \frac{R}{R + jn\omega \frac{R}{2\pi f_c}} = \tilde{v}_n \frac{1}{1 + jn\frac{2\pi f_{SWITCH}}{2\pi f_{CORNER}}}$$

$$= \tilde{v}_n \frac{1}{1 + jn\,100}$$

THE OUTPUT SERIES IS

$$v_R(t) = D_1 V_{in} + \frac{2V_{in}}{\pi}\sum_{n=1}^{\infty}\frac{\sin(n\pi D)}{n\sqrt{1+10000n^2}}\cos\left(n\omega t - n\omega t_0 - \tan^{-1}(100n)\right)$$

Problem 2.18

Elements of Power Electronics, 2nd edition. © 2015 Philip T. Krein. All rights reserved. Use and reproduction is limited to authorized instructors registered with the publisher, Oxford University Press. Unauthorized use is prohibited.

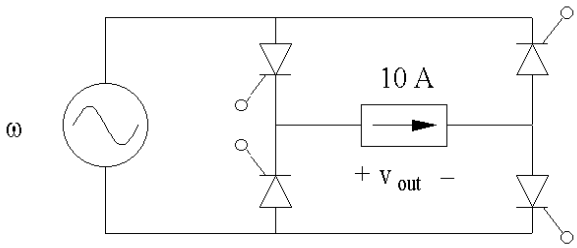

The figure shows a bridge with an arbitrary current source load, modified to use SCRs in place of diodes. The SCR allows us to delay the turn-on. An SCR is off unless a gate signal is applied, and then acts like a diode. For the trial method, this means we can treat the device as fully blocking when no gate signal is present, and as a diode once a gate signal (even a brief one) is applied.

We are told that the switching functions operate with 90 degree delay. For a given device, this means it will not turn on until 90 degrees after a conventional full-wave signal. However, once a given device is on, the current source ensures that positive current flows. Thus each device cannot turn on until another device turns on to pick up the current flow. Let's see the results:

Set some values, just for ease in plotting.
Plot two cycles and 1000 points per cycle.

$\omega := 1$ $\quad vin(t) := 1\cdot\cos(\omega\cdot t)$ $\quad tlast := 4\cdot\pi$ $\quad i := 0..2000$ $\quad t_i := \frac{tlast}{2000}\cdot i$

$qa(t) := if\left(\cos\left(\omega\cdot t - \frac{\pi}{2}\right) > 0, 1, 0\right)$ $\quad qb(t) := 1 - qa(t)$

Switches act in complement, per KVL and KCL.

$vout(t) := qa(t)\cdot vin(t) - qb(t)\cdot vin(t)$

Now a plot.

Vout is solid, and vin is dotted.

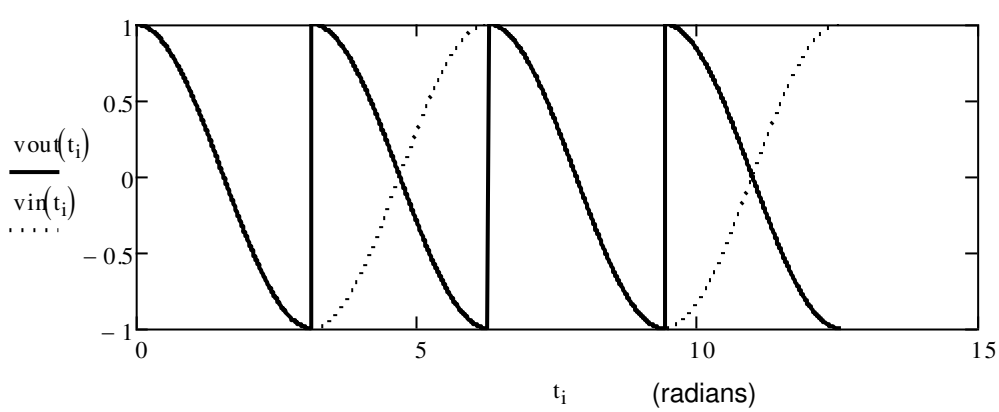

The output fundamental radian frequency is 2ω. Let's do the Fourier component for the fundamental in some detail.

$\omega out := 2\cdot\omega \quad T := \frac{2\cdot\pi}{\omega out}$ The period is half that of the input. Now for the integrals. The dc value is 0.

$$a1 := \frac{1}{T}\cdot\int_0^T 1\cdot\cos(\omega\cdot t)\cdot\cos(\omega out\cdot t)\,dt \qquad a1 = 0$$

$$b1 := \frac{1}{T}\cdot\int_0^T 1\cdot\cos(\omega\cdot t)\cdot\sin(\omega out\cdot t)\,dt \qquad b1 = 0.4244$$

As the symmetry suggests, the an terms are zero. The term b1 = c1 = 0.4244 V for the 1 V input peak value.
This is the amplitude of the fundamental.

Since the output current is dc, the power level is determined by the dc value of the output voltage.
Since the dc output component is 0, the average power to the load is zero. This would be true of any dc load with current-like behavior.

Problem 2.19

Elements of Power Electronics, 2nd edition. © 2015 Philip T. Krein. All rights reserved. Use and reproduction is limited to authorized instructors registered with the publisher, Oxford University Press. Unauthorized use is prohibited.

Since the converter is a 2x2 matrix with input voltage and, effectively, output current, the switches in each column must act in complement. With q11=q22, we require q11+q21=1, and therefore q21=q12=1-q11=1-q22. The matrix symmetry suggests duty ratios of 50%, although this is not certain.

The input is at 60 Hz, and switching is at 40 Hz. Let us set this up and plot the result.

$V0 := 5$ <-- Just for the plot. $vin(t) := V0 \cos(2 \cdot \pi \cdot 60 \cdot t)$

Here is a direct way to write a switching function: Use the "if" command, and test a sinusoid to get the right duty ratio, phase, and frequency for the pulse train.

$q11(t) := if(\cos(2 \cdot \pi \cdot 40 \cdot t) > 0, 1, 0)$

Now set up the other functions, and write the output expression: $q22(t) := q11(t)$ $q12(t) := 1 - q11(t)$

$q21(t) := 1 - q22(t)$

$vout(t) := q11(t) \cdot q22(t) \cdot vin(t) - q12(t) \cdot q21(t) \cdot vin(t)$ <-- If 1,1 is on, vout=+vin. If 1,2 is on, vout = -vin.

Now, a plot for 0.1 s. $tlast := 0.1$ $i := 0..2000$ $t_i := \frac{tlast}{2000} \cdot i$

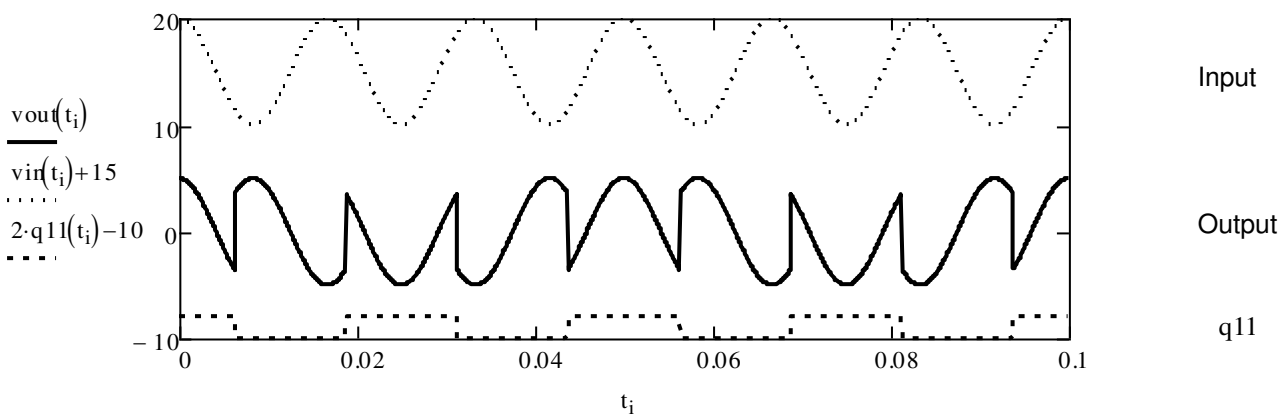

This shows the output (solid), the input (dotted, with an offset for clarity), and q11.
By inspection, the output waveform repeats every 0.05 s, giving a fundamental frequency of 20 Hz.

What about part (c)? We notice that q11(t) has a Fourier series with components at multiples of 40 Hz. Also, notice that the output expression simplifies to vout(t) = [2q11(t)-1]*vin(t). Thus there are terms in the output corresponding to cos(n*2*π *40*t) x cos(2*π *60*t). The q11(t) terms have a coefficient proportional to 2/n, so the output terms get smaller as n increases.

From trig identity (A.5) in the appendix, the product can be written as a sum,
(2/n) cos(n2π 40t) cos(2π 60t) = (1/n) [cos(n2π 40t + 2π 60t) + cos(n2π 40t - 2π 60t)]. Consider a few values of n:

n	Frequency term in q11	Frequency of vin	Sum term frequency	Difference term frequency
1	40	60	100	20
2	80	60	140	20
3	120	60	180	60
4	160	60	220	100
5	200	60	260	140

Since the n=1 term is largest, the wanted output should be either at 20 Hz or at 100 Hz (or, much less likely, both of these simultaneously).

Can we prove this?

$n := 1..10$ $\quad Tout := \frac{1}{20}$ $\quad w := \frac{2\cdot\pi}{Tout}$

$$a_n := \frac{1}{Tout}\cdot\int_0^{Tout} vout(t)\cdot\cos(n\cdot w\cdot t)\,dt$$

$$b_n := \frac{1}{Tout}\cdot\int_0^{Tout} vout(t)\cdot\sin(n\cdot w\cdot t)\,dt$$

$$c_n := \sqrt{(a_n)^2 + (b_n)^2}$$

$c_n =$

1.5915
0
0.5305
0
1.5915
0
0.3183
0
0.5305
0

<-- Sure enough, the n=1 and n=5 terms (which correspond to 20 Hz and 100 Hz based on the output frequency) are much larger than others.

2.20

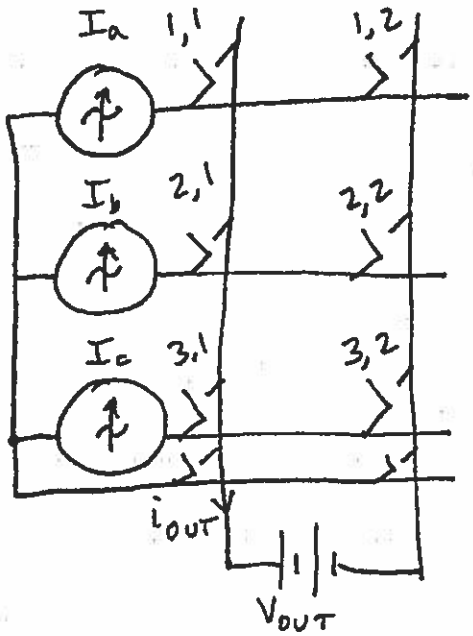

Notice that one and only one switch in each <u>row</u> should be on at a time.

$q_{11} + q_{12} = q_{21} + q_{22} = q_{31} + q_{32} = 1 = q_{41} + q_{42}$

We can make $i_{OUT} = I_a$ or I_b or I_c, or sums like $I_a + I_b$, etc.

All devices must carry ac current and block dc potential → . In the left column is the arrangement.

To the right, is needed.

Elements of Power Electronics 2nd edition Krein Solutions Manual

Problem 3.1

Elements of Power Electronics, 2nd edition. © 2015 Philip T. Krein. All rights reserved. Use and reproduction is limited to authorized instructors registered with the publisher, Oxford University Press. Unauthorized use is prohibited.

This solution was prepared by Jason Galtieri.

A voltage divider provides 1 V output from 5 V input. The maximum output current is 1 mA. The resistors are chosen to provide load regulation of better than 1% over the load current range of 0–1 mA. Find the resistor values necessary for this application. What is the efficiency at full load?

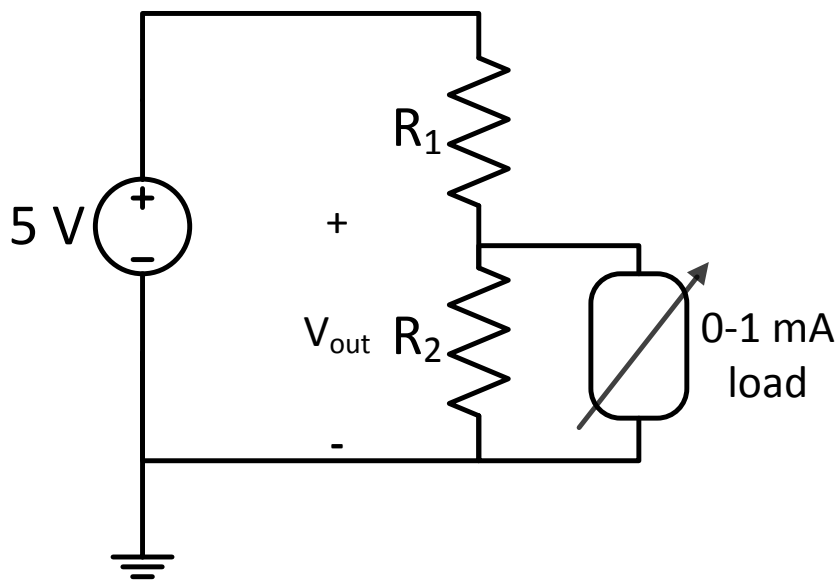

We want

$$\frac{V_{out}|_{no\ load} - V_{out}|_{1mA\ load}}{1\ V} \leq 1\%$$

At no load, the divider determines the output voltage.

$$\frac{R_2}{R_1 + R_2} = \frac{1}{5} \quad \rightarrow R_1 = 4R_2$$

At 1 mA load, the voltage will decrease. With approximately 1 V output and 1 mA, the load can be represented as a 1 kΩ resistor. The voltage should be at least 0.99 V to meet requirements.

Thus

$$\frac{R_2||R_{load}}{R_1 + R_2||R_{load}} \geq \frac{0.99\ V}{5\ V}$$

Substituting, $R_{load} = 1\ k\Omega, R_1 = 4R_2$

$$\frac{R_2||1\ k\Omega}{4R_2 + R_2||1\ k\Omega} \geq \frac{0.99\ V}{5\ V}$$

$$\frac{\frac{1000\ x\ R_2}{1000 + R_2}}{4R_2 + \frac{1000\ x\ R_2}{1000 + R_2}} \geq 0.198$$

After simplification

$$R_1 \leq 50.1\ \Omega$$
$$R_2 \leq 12.6\ \Omega$$

Let's choose $R_1 = 50\ \Omega, R_2 = 12.5\ \Omega$

At no load, this gives 1.00 V

At 1 mA load, this gives 0.990 V

What about efficiency? At full load, the output power is 1 mW. The input current can be found with the voltage across the 50 Ω resistor.

$$\frac{4.01\ V}{50\ \Omega} = 80.2\ mA$$

So, $P_{in} = 0.0802\ A\ x\ 5\ V = 0.401\ W$

Efficiency, $\eta = \frac{P_{out}}{P_{in}} = \frac{1}{401} = 0.25\%$

This extremely low efficiency highlights a dilemma: to obtain load regulation with a divider, it is necessary to draw so much power that the load essentially has no effect.

Problem 3.2

Elements of Power Electronics, 2nd edition © 2015 Philip T. Krein. All rights reserved. Use and reproduction is limited to authorized instructors registered with the publisher, Oxford University Press. Unauthorized use is prohibited.

This solution was prepared by Jason Galtieri.

A voltage divider is used to split a 12 V battery into ±6 V levels, as shown in Figure 3.89. This divider is intended to supply up to 10 W total, split between the two output voltage levels in arbitrary ratios. Load regulation is to be better than 1% from 0 W to 10 W. Choose resistors to meet this need, subject to achieving the highest possible efficiency. What is this efficiency?

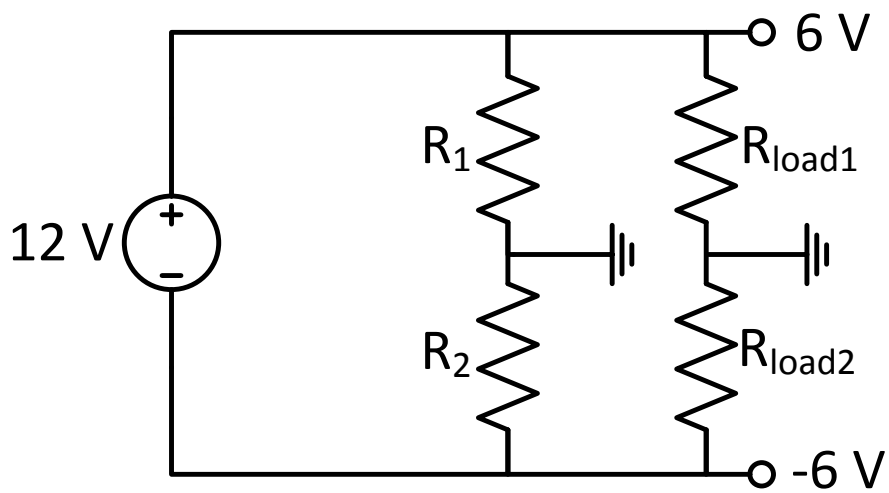

The total load can be up to 2 W in any fraction. For example, if the +6 V supply provides 2 W and the -6V provides 0 W, then R_{load1} will be 18 Ω and R_{load2} will be infinite (open). If each supplies 1 W, the resistors are 36 Ω, and so on.

We want to choose R_1 and R_2 such that both voltages change by less than 1% over the allowed load range. It should be clear that the open circuit case is the highest, and the 18 Ω case yields the lowest voltage.

Case 1: $R_{load1} = \text{infinite}, R_{load2} = 18\ \Omega$

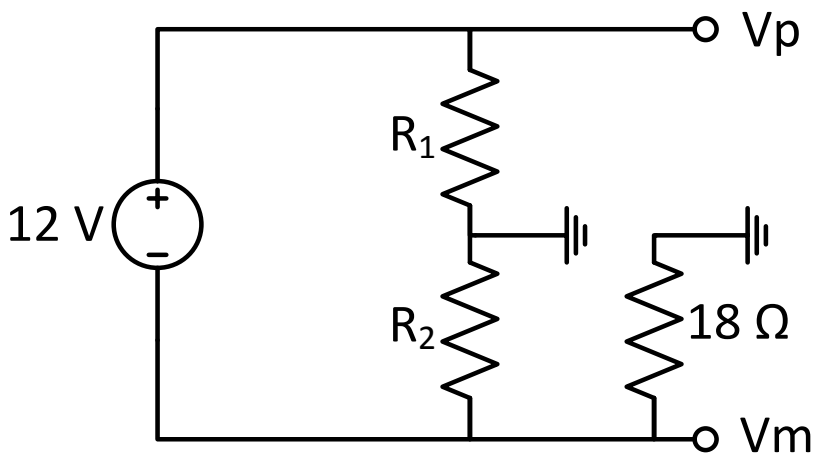

Case 2: $R_{load1} = 18\ \Omega, R_{load2} = \text{infinite}$

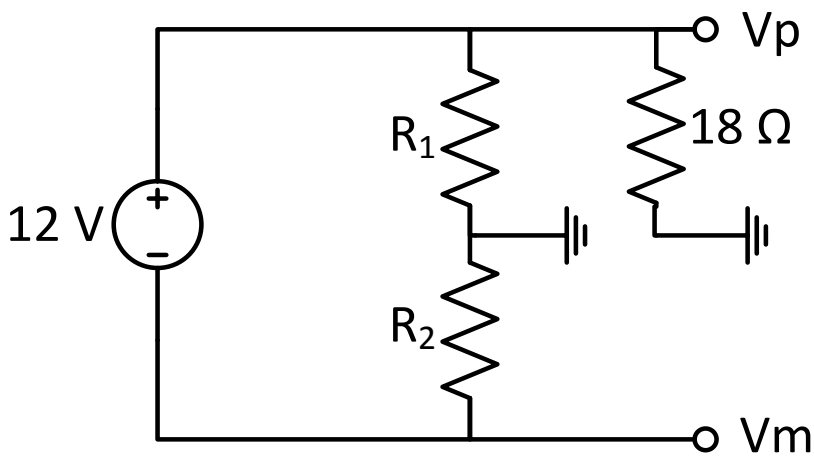

Let us select the high level to be 6.00 V $+0.5\%$, or 6.03 V. Then the low level is 1% less, or 5.97 V

We have

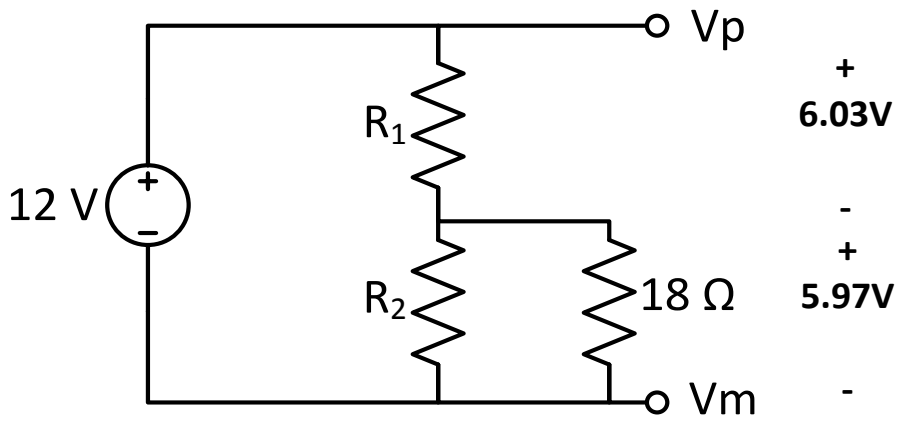

Thus

$$\frac{R_2||18}{R_1 + R_2||18} = \frac{5.97}{12} \quad \text{and} \quad R_1 = R_2$$

Therefore

$$\frac{\frac{18R_2}{18 + R_2}}{R_2 + \frac{18R_2}{18 + R_2}} = \frac{5.97}{12}$$

$$\frac{\frac{18}{18 + R_2}}{1 + \frac{18}{18 + R_2}} = \frac{18}{36 + R_2} = \frac{5.97}{12}$$

$R_1 = 0.18\,\Omega\,, R_2 = 0.18\,\Omega$

If the values were higher, the load regulation requirement would not be met. If lower, more power would be consumed. The power lost is very nearly $\frac{(6V)^2}{0.18\,\Omega} \times 2 = 400\text{ W}$. The efficiency at best is $\frac{2\text{ W}}{402\text{ W}} = 0.5\ \%$
To restrict to only 1% variation, you must draw 100X current in the divider resistors!

Problem 3.3

Elements of Power Electronics, 2nd edition. © 2015 Philip T. Krein. All rights reserved. Use and reproduction is limited to authorized instructors registered with the publisher, Oxford University Press. Unauthorized use is prohibited.

This solution was prepared by Jason Galtieri.

A series linear regulator delivers 1.2 V at up to 1 A, provided the input is at least 2.0 V. Plot efficiency versus input voltage for voltages from 2 V to 24 V, given a 0.1 A load as well as a 1 A load. How much power (in the form of heat) must be dissipated in the regulator over these ranges?

$$\eta = \frac{V_{out}}{V_{in}}$$

$$P_{loss} = (V_{in} - V_{out}) \times I_{load}$$

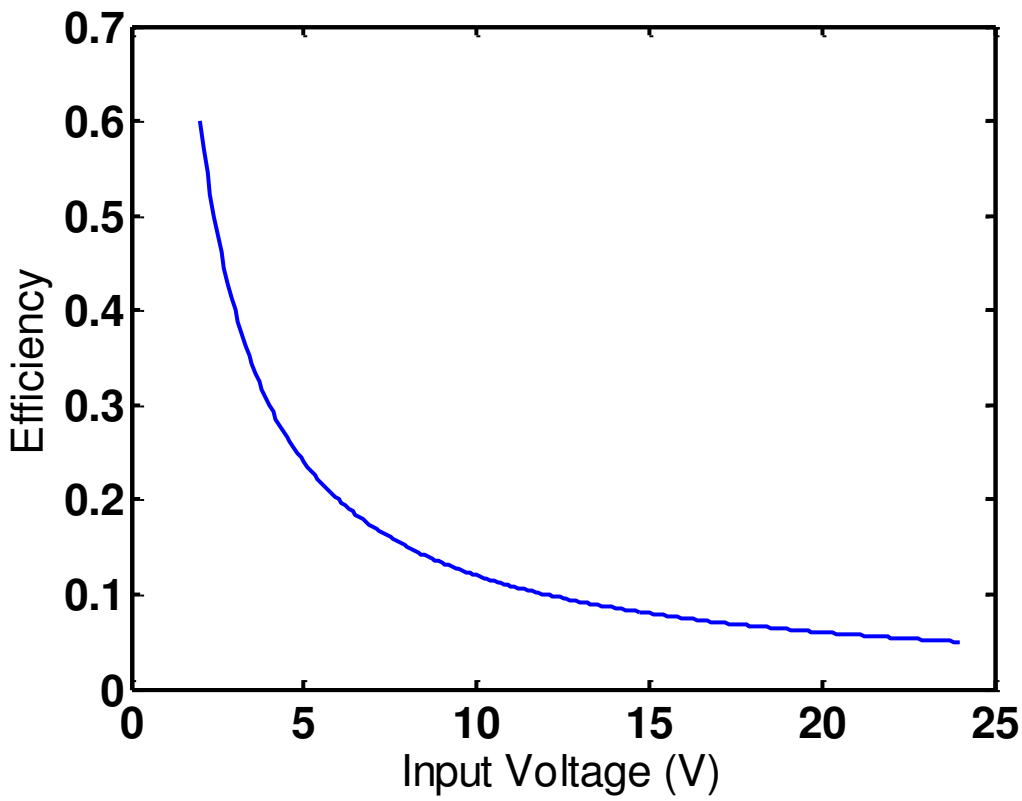

Load current does not have an effect on regulator efficiency.

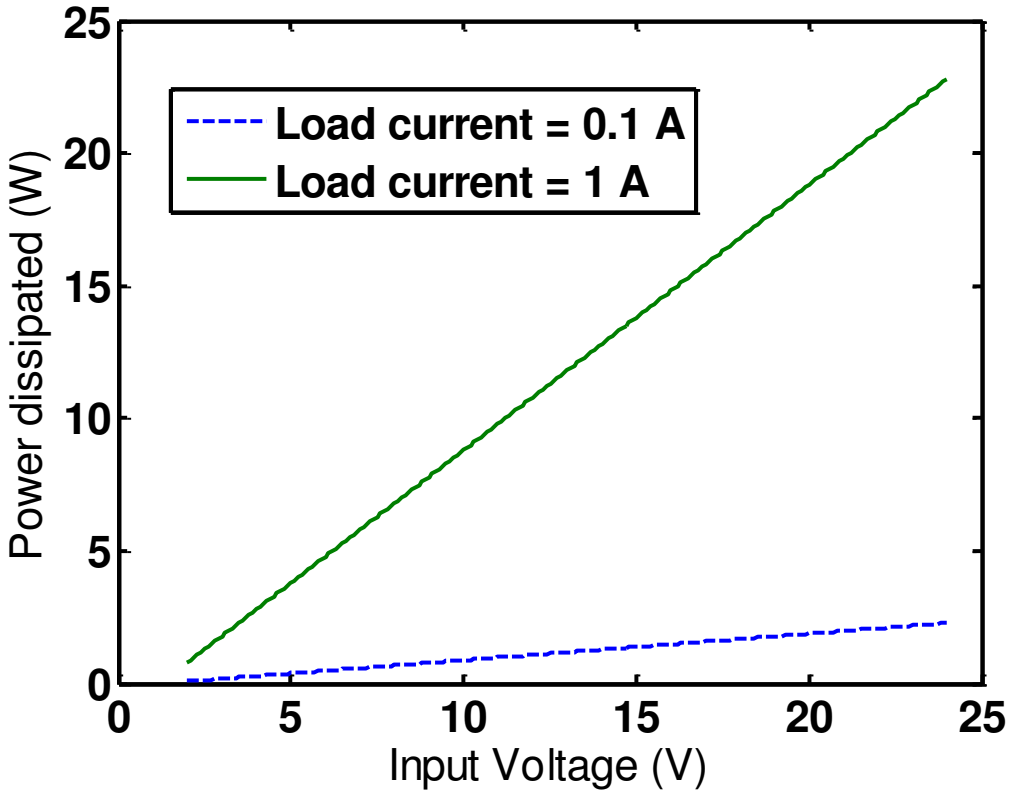
Load current = 0.1 A
Load current = 1 A
Power dissipated (W)
Input Voltage (V)
0
5
10
15
20
25

Problem 3.4

Elements of Power Electronics, 2nd edition. © 2015 Philip T. Krein. All rights reserved. Use and reproduction is limited to authorized instructors registered with the publisher, Oxford University Press. Unauthorized use is prohibited.

This solution was prepared by Jason Galtieri.

A shunt regulator is made with a series resistor and a 4.7 V Zener diode. It is intended to deliver 4.7 V at load currents from 0 to 0.1 A and for input voltages from 6 V to 15V. There is a specific series resistor value in this situation that will maximize the efficiency. Find that value. (Hint: The current in the Zener diode reaches exactly zero at the highest load and lowest input voltage when the resistor is chosen this way.) What is the regulator's efficiency at maximum load and minimum input voltage? What is it at maximum load and maximum input voltage? What power is consumed with no load?

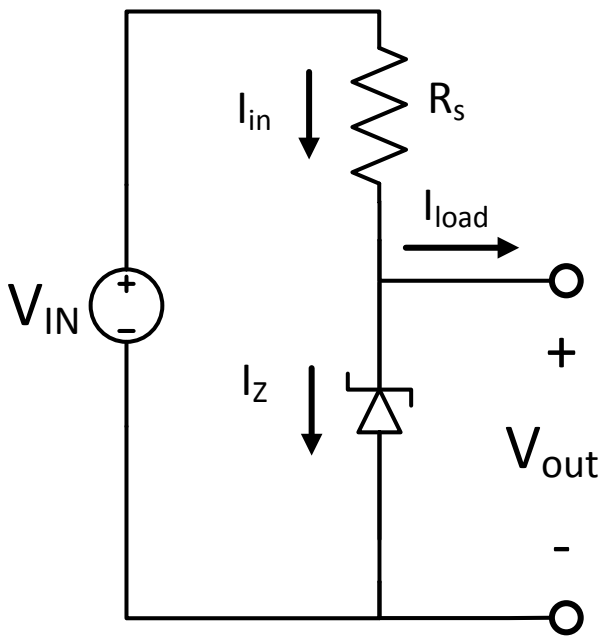

a)

$$I_{in} = I_{load} + I_z$$

$$I_{in} = \frac{V_{in} - 4.7\ V}{R_s}$$

Using hint: $I_z = 0$ when $I_{load} = 0.1\ A$ and $V_{in} = 6\ V$ to find resistor value.

$$0.1 = \frac{6\ V - 4.7\ V}{R_s}$$

So the resistance which maximizes efficiency is:

$$R_s = \frac{6 - 4.7}{0.1} = 13\ \Omega$$

b) Using equation 3.6: at maximum load and minimum input voltage

$$\eta = \frac{V_{out} I_{load}}{V_{in}(I_{load} + I_z)} = \frac{4.7\ V \times 0.1\ A}{6\ V\ (\ 0.1\ A + 0\ A)} = 0.7833$$

c) At maximum load and maximum input voltage

$$\eta = \frac{V_{out} I_{load}}{V_{in}(I_{load} + I_z)} = \frac{4.7\ V \times 0.1\ A}{15\ V\ (\ 0.1\ A + 0\ A)} = 0.2667$$

d) Power consumed at no load

For $V_{in} = 15\ V$

$$I_{in} = I_z = \frac{15 - 4.7}{13} = 0.79\ A$$

$$P_{loss} = (4.7\ V \times 0.79\ A) + (0.79^2\ A^2 \times 13\ \Omega) = 11.83\ \text{W}$$

For $V_{in} = 6\ V$

$$I_{in} = I_z = \frac{6 - 4.7}{13} = 0.1\ A$$

$$P_{loss} = (4.7\ V \times 0.1\ A) + (0.01\ A^2 \times 13\ \Omega) = 0.60\ \text{W}$$

Problem 3.5

Elements of Power Electronics, 2nd edition. © 2015 Philip T. Krein. All rights reserved. Use and reproduction is limited to authorized instructors registered with the publisher, Oxford University Press. Unauthorized use is prohibited.

This solution was prepared by Jason Galtieri.

In a particular computer application, the supply voltage is 5 V. The nominal load current is 10 A, and the digital circuit itself uses a voltage labeled V_{dd}. It is proposed to save power by decreasing the voltage V_{dd} and using an adjustable LDO series regulator to step down from 5 V. If the current stays the same, what power must be delivered to the regulator when V_{dd}= 4.5 V? What if V_{dd} is reduced to 1.5 V? What is the efficiency of the shunt regulator at these two output voltages?

Power delivered to the regulator will just be the difference between P_{in} and P_{out}. Efficiency is found using equation 3.8.

$$P_{in} = 5\ V \times 10\ A$$

$$P_{out} = V_{dd} \times 10\ A$$

When $V_{dd} = 4.5$

$$P_{reg} = 50\ W - 45\ W = 5\ W$$

$$\eta = \frac{4.5}{5} = 0.90$$

When $V_{dd} = 1.5$

$$P_{reg} = 50\ W - 15\ W = 35\ W$$

$$\eta = \frac{1.5}{5} = 0.30$$

Problem 3.6

Elements of Power Electronics, 2nd edition. © 2015 Philip T. Krein. All rights reserved. Use and reproduction is limited to authorized instructors registered with the publisher, Oxford University Press. Unauthorized use is prohibited.

This solution was prepared by Jason Galtieri.

Following from problem 5, another computer application has a 5 V supply. The load current at 5 V output is 10 A. The digital circuit that is the load operates from a voltage V_{dd}. It is proposed to save power by decreasing V_{dd} and using an adjustable LDO regulator to step down from the supply. In this case, the digital circuit's current decreases approximately linearly as the voltage decreases. What power must be delivered to the regulator in this case when V_{dd} = 4.5 V? What if V_{dd} is reduced to 1.5 V? What is the efficiency of the shunt regulator at these two output voltages?

Keeping the assumption that $I_{out} \approx I_{in}$

$$P_{in} = 5\ V \times I_{out}$$

$$P_{out} = V_{dd} \times I_{out}$$

$$I_{out} = \frac{V_{dd}}{5\ V} \times 10\ A$$

When $V_{dd} = 4.5$ V,

$$I_{out} = \frac{4.5\ V}{5\ V} \times 10\ A = 9\ \text{A}$$

$$P_{reg} = 45\ W - 40.5\ W = 4.5\ W$$

$$\eta = \frac{4.5}{5} = 0.90$$

When $V_{dd} = 1.5$ V

$$I_{out} = \frac{1.5\ V}{5\ V} \times 10\ A = 3\ \text{A}$$

$$P_{reg} = 15\ W - 4.5\ W = 10.5\ W$$

$$\eta = \frac{1.5}{5} = 0.30$$

Problem 3.7

Elements of Power Electronics, 2nd edition. © 2015 Philip T. Krein. All rights reserved. Use and reproduction is limited to authorized instructors registered with the publisher, Oxford University Press. Unauthorized use is prohibited.

This solution was prepared by Jason Galtieri.

Repeat problem 5—but now with an ideal buck converter used instead of an LDO regulator. The converter efficiency is 100% under allowed operating conditions.

If the converter is 100% efficient, no power will delivered to the converter at either values of V_{dd}. The efficiency of the buck converter is not dependent on V_{in} and V_{out} if lossless components are assumed. There is no loss for any input in this range.

Duty ratio when $V_{dd} = 4.5\ V$

$$D_1 = \frac{4.5}{5} = 0.9$$

Duty ratio when $V_{dd} = 1.5\ V$

$$D_1 = \frac{1.5}{5} = 0.3$$

Problem 3.8

Elements of Power Electronics, 2nd edition. © 2015 Philip T. Krein. All rights reserved. Use and reproduction is limited to authorized instructors registered with the publisher, Oxford University Press. Unauthorized use is prohibited.

This solution was prepared by Jason Galtieri.

Repeat problem 6—but now with an ideal buck converter in place of the LDO regulator.

If the converter is 100% efficient, no power will delivered to the converter at either values of V_{dd}. The efficiency of the buck converter is not dependent on V_{in}, V_{out}, or I_{out} if lossless components are assumed. There is no loss is either case. Operation is adjusted by setting a duty ratio, but to first order duty ratio is not linked to efficiency.

Duty ratio when $V_{dd} = 4.5$

$$D_1 = \frac{4.5}{5} = 0.9$$

Duty ratio when $V_{dd} = 1.5$

$$D_1 = \frac{1.5}{5} = 0.3$$

Problem 3.9

Elements of Power Electronics, 2nd edition. © 2015 Philip T. Krein. All rights reserved. Use and reproduction is limited to authorized instructors registered with the publisher, Oxford University Press. Unauthorized use is prohibited.

This solution was prepared by Jason Galtieri.

A buck converter steps 5 V down to 1.2 V for a digital circuit. The load current varies from 1 A to 50 A. The switching frequency is 500 kHz. The inductor is chosen to allow no more than 1 A peak-to-peak ripple, and the capacitor limits output ripple to 10% peak to peak.

a. Find values of L and C to meet these requirements.
b. Plot the inductor current and output voltage for a 1 A load, a 10 A load, and a 50 A load.

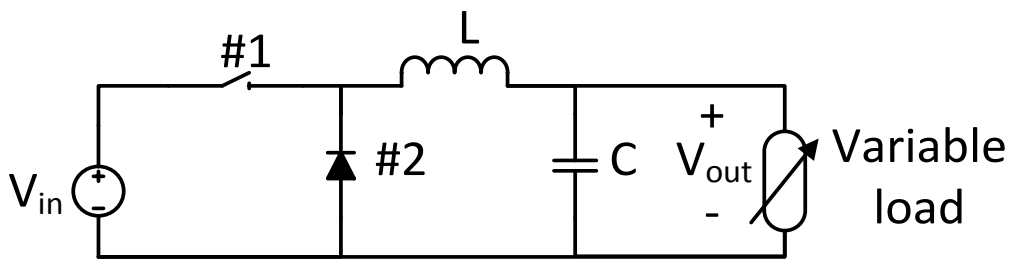

a)

$$Duty\ ratio\ (D_1) = \frac{V_{out}}{V_{in}} = \frac{1.2}{5} = 0.24$$

When switch #1 is on

$$v_L = L\frac{di}{dt}$$

$$V_{in} - V_{out} = L\frac{\Delta i}{\Delta t}$$

$$\Delta i = 1\ A\ peak\ to\ peak$$

$$\Delta t = D_1 T = 0.24 \times 2\ \mu s$$

$$L = \frac{\Delta t(V_{in} - V_{out})}{\Delta i} = 1.82\mu H$$

The inductor imposes a triangular current on the output. We would like the capacitor current (i_c) to carry the triangular ripple so i_{load} will be fixed.

Since:

$$i_c = C\frac{dv}{dt}$$

The voltage will rise when i_c (the triangle) is positive. Let us integrate over this interval to find the change in voltage.

$$\Delta v = \frac{1}{C}\int i_c(t)dt = area\ of\ shaded\ triangle$$

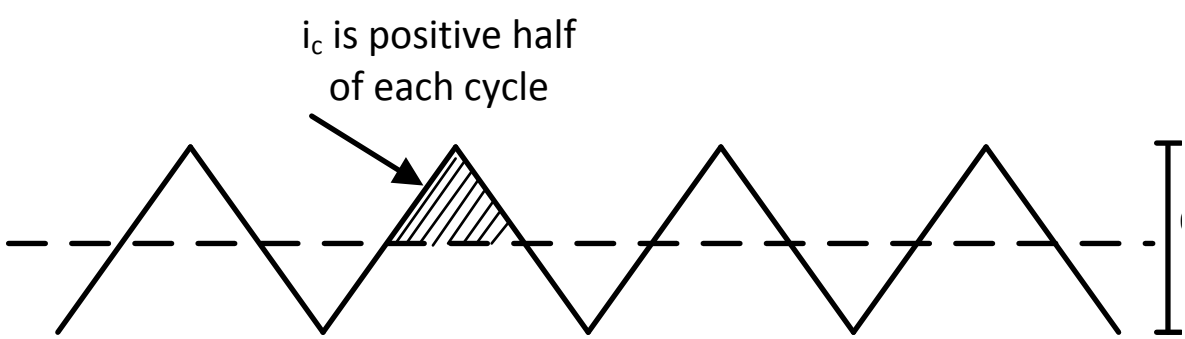

Where the height of each triangle (Δi) is 1 A peak to peak

Area of triangle

$$\frac{1}{2}(base)(height) = \frac{1}{2}\left(\frac{T}{2}\right) \times \frac{\Delta i}{2} = 2.5\ \times 10^{-7}$$

$$\Delta v = \frac{1}{C} \times 2.5\ \times 10^{-7} \leq 0.1 \times 1.2\ V$$

$$C \geq 2.08\ \mu F$$

1

b)

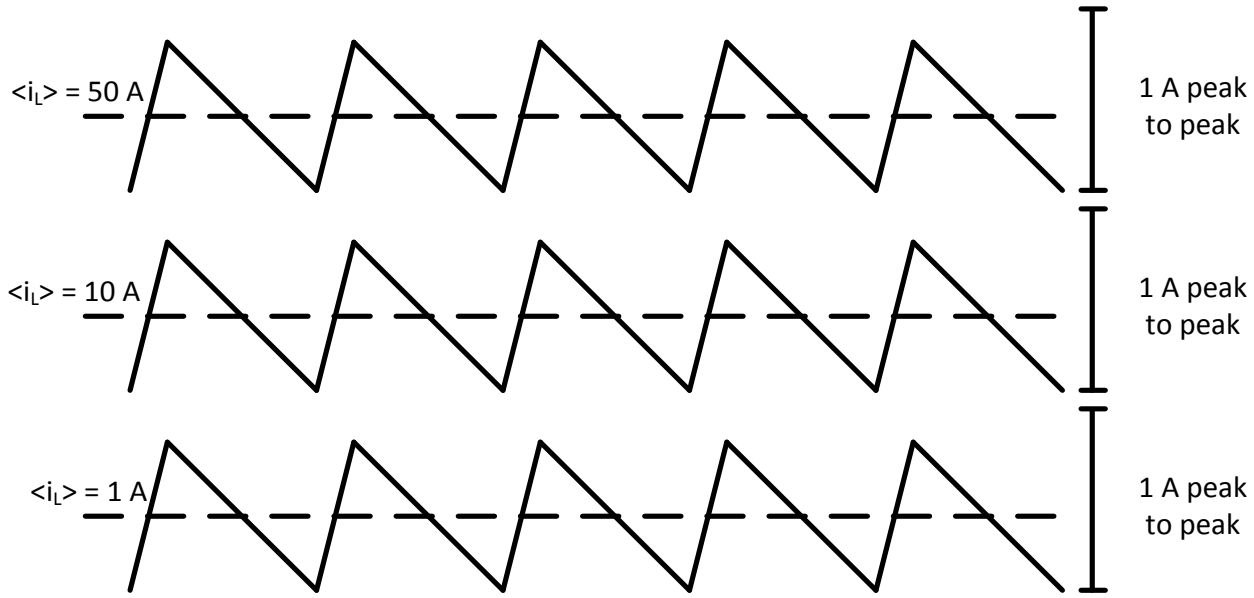

Output voltage ripple will be the same for the different load currents.

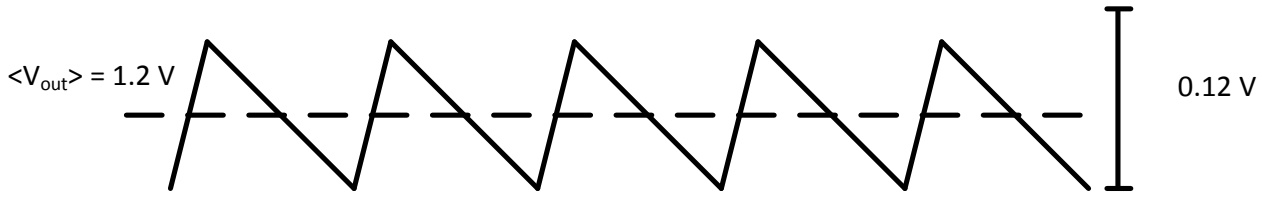

Problem 3.10

Elements of Power Electronics, 2nd edition. © 2015 Philip T. Krein. All rights reserved. Use and reproduction is limited to authorized instructors registered with the publisher, Oxford University Press. Unauthorized use is prohibited.

This solution was prepared by Jason Galtieri.

A dc–dc converter has 12 V input and 3.3 V output at power levels between 10 W and 60 W. The switching frequency is 120 kHz. Draw a circuit that can perform this function. Determine inductor and capacitor values necessary to keep the output ripple below ±1%.

Since V_{out} is always less than V_{in} a buck converter will be a good choice.

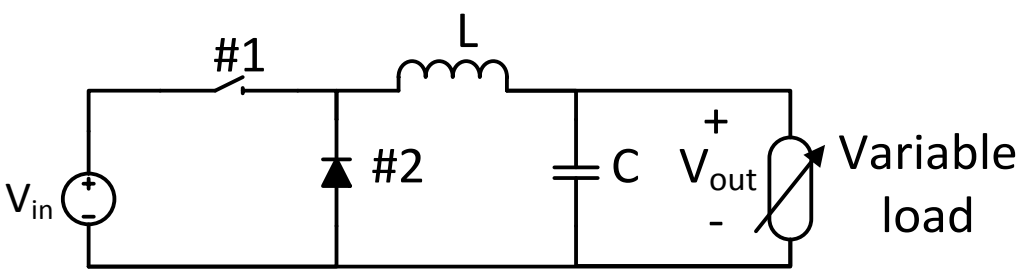

$$Duty\ ratio\ (D_1) = \frac{V_{out}}{V_{in}} = \frac{3.3}{12} = 0.275$$

$$\text{At } 10\ W\text{, the load } \frac{3.3^2\ V}{10\ W} = \ 1.09\ \text{Ù}$$

$$\text{At } 60\ W\text{, the load } \frac{3.3^2\ V}{60\ W} = \ 0.18\ \Omega$$

There are many options for L and C. If $C = 0$, then L must enforce current ripple below $\pm 1\%$ to prevent excessive output variation. For this case:

$$v_L = L\frac{di}{dt}$$

$$V_{in} - V_{out} = L\frac{\Delta i}{\Delta t}$$

$$\Delta i = 0.02 \times \frac{V_{load}}{R_{load,10W}} = 0.061 \text{ A}$$

Note: The lower power level is used because it enforces a tighter Δi tolerance

$$\Delta t = D_1 T = 0.275 \times \frac{1}{120kHz} = 2.29\mu s$$

$$L = \frac{\Delta t(12 - 3.3)}{\Delta i} = 327\ \mu H$$

As another alternative, let $L = 20\ \mu H$ and find the necessary C.

Now with switch #1 on,

$$v_L = L\frac{di}{dt}$$

$$8.7 = 20\ \mu H\ \frac{\Delta i}{\Delta t}$$

Solving for Δi gives

$$\Delta i = 0.996\ A$$

The inductor imposes a triangular current on the output. We would like the capacitor current (i_c) to carry the triangular ripple so i_{load} will be fixed.

Since:

$$i_c = C\frac{dv}{dt}$$

The voltage will rise when i_c (the triangle) is positive. Let us integrate over this interval to find the change in voltage.

$$\Delta v = \frac{1}{C}\int i_c(t)dt = area\ of\ shaded\ triangle$$

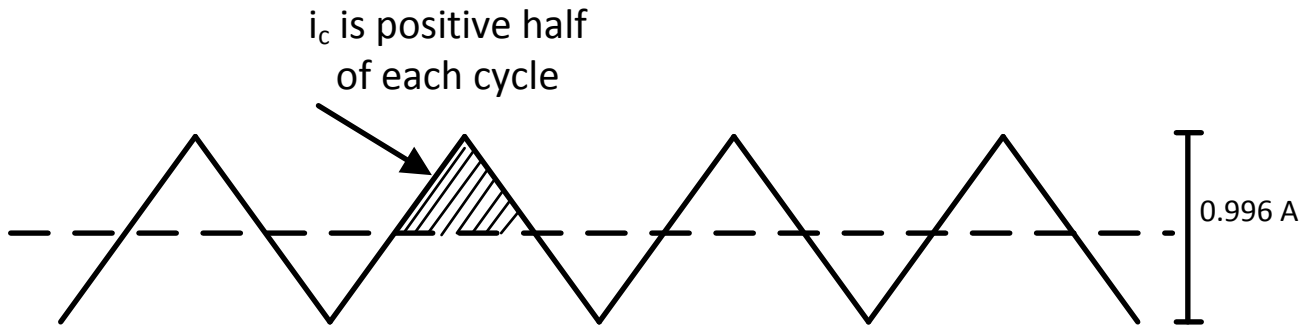

Area of triangle

$$\frac{1}{2}(base)(height) = \frac{1}{2}\left(\frac{T}{2}\right)\frac{\Delta i}{2} = 2.08\ \times 10^{-6}$$

$$\Delta v = \frac{1}{C} \times 2.08\ \times 10^{-6} < 0.02 \times 3.3\ V$$

$$C > 31.5\ \mu F$$

Problem 3.11

Elements of Power Electronics, 2nd edition. © 2015 Philip T. Krein. All rights reserved. Use and reproduction is limited to authorized instructors registered with the publisher, Oxford University Press. Unauthorized use is prohibited.

This solution was prepared by Jason Galtieri.

A converter has 5 V input and produces 15 V output at a rated load of 4 W for an analog circuit application. The switching frequency is 250 kHz. Draw a circuit that can perform this function. Select inductor and capacitor values to keep the peak-to-peak output ripple below 200 mV.

A boost converter will work for this application.

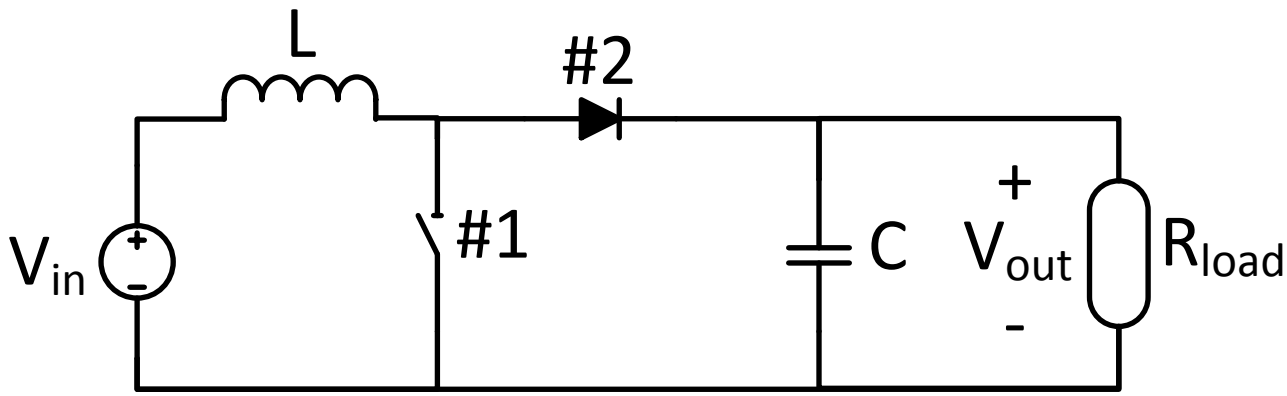

To draw $4\ W$ the load will have a resistance of $\frac{V_{out}^2}{P_{out}} = 56.25\ \Omega$

We want the output ripple below $200\ mV$ peak to peak. The average inductor current is $\frac{4\ W}{5\ V} = 0.8\ A$

Duty: $D_2 = \frac{V_{in}}{V_{out}} = \frac{5}{15} = \frac{1}{3}$

Ripple: With the diode off, the capacitor supplies the load, with a current of $\frac{4\ W}{15\ V}$

$$i_c = C\frac{dv}{dt} = C\ \frac{\Delta v}{\Delta t}$$