College Algebra 13th edition Gustafson Test Bank

SKU: 9780357723654-TEST-BANK

Name:_____ Class:_____ Date:_____

1.1 - Linear Equations and Rational Equations

1. x represents a real number. Find any restrictions on x.

$x + 5 = 10$

a. $(0, \infty)$
b. 0
c. $x \geqslant -3$
d. $(-\infty, 5)$
e. no restrictions

ANSWER: e

2. x represents a real number. Find any restrictions on x.

$$\frac{2}{x-8}$$

a. $x \neq 2$
b. $x \neq 0$
c. $x \neq 8$
d. $x > 0$
e. no restrictions

ANSWER: c

3. x represents a real number. Find any restrictions on x.

$\sqrt{x} = 3$

a. $x \neq 3$
b. $x \geq 0$
c. $x > 0$
d. $x \neq 0$
e. no restrictions

ANSWER: b

4. Solve the equation.

$2x + 9 = 23$

a. $x = 7$
b. $x = 16$
c. $x = 20$
d. $x = -16$
e. $x = 1$

ANSWER: a

Copyright Cengage Learning. Powered by Cognero.

College Algebra 13th edition Gustafson Test Bank

Name:_____ Class:_____ Date:_____

1.1 - Linear Equations and Rational Equations

5. Solve the equation.

$3x + 3 = x + 19$

a. $x = 3$
b. $x = 47$
c. $x = -8$
d. $x = 44$
e. $x = 8$

ANSWER: e

6. Solve the equation.

$\frac{x-7}{3} = 10$

a. $x = -47$
b. $x = 37$
c. $x = 47$
d. $x = 23$
e. $x = 43$

ANSWER: b

7. Solve the equation.

$\frac{x}{5} + 1 = 2$

a. $x = 10$
b. $x = -2$
c. $x = 15$
d. $x = 3$
e. $x = 5$

ANSWER: e

8. Solve the equation.

$\frac{9}{x-4} = 1$

a. $x = 5$
b. $x = 13$
c. $x = 16$
d. $x = -16$
e. $x = -13$

Copyright Cengage Learning. Powered by Cognero.

College Algebra 13th edition Gustafson Test Bank

1.1 - Linear Equations and Rational Equations

ANSWER: b

9. Solve the equation.

$5(x+1)=3x+13$

a. $x=11$
b. $x=-1$
c. $x=1$
d. $x=-4$
e. $x=4$

ANSWER: e

10. Solve the equation.

$5(5x+4)-23(x+5)=-83$

a. $x=8$
b. $x=6$
c. $x=13$
d. $x=-6$
e. $x=1$

ANSWER: b

11. Solve the equation.

$$\frac{4x-17}{18}=\frac{1}{6}$$

a. $x=5$
b. $x=8$
c. $x=14$
d. $x=-5$
e. $x=0$

ANSWER: a

12. Solve the equation.

$x(x-3)-8=(x-1)^2$

a. $x=-9$
b. $x=-2$
c. $x=-4$
d. $x=-54$
e. $x=-18$

Copyright Cengage Learning. Powered by Cognero.

College Algebra 13th edition Gustafson Test Bank

1.1 - Linear Equations and Rational Equations

ANSWER: a

13. Solve the equation.

$$\frac{6}{x+11}-\frac{1}{3}=\frac{1}{x+11}$$

a. $x=4$
b. $x=20$
c. $x=-4$
d. $x=1$
e. $x=-1$

ANSWER: a

14. Solve the equation.

$$5x+\frac{2(-10x+5)}{3x+5}=\frac{15x^2}{3x+5}$$

a. $x=1$
b. $x=7$
c. $x=2$
d. $x=-2$
e. $x=4$

ANSWER: d

15. Solve the equation.

$$\frac{10}{y+4}+\frac{4}{y+2}=\frac{12}{y+2}-\frac{2}{y^2+6y+8}$$

a. $y=5$
b. $y=6$
c. $y=1$
d. $y=2$
e. $y=3$

ANSWER: a

16. Solve the equation.

$$\frac{3x-3}{x+3}+\frac{3x-6}{x-3}=\frac{3-6x}{3-x}$$

a. $x=8$
b. $x=15$

Copyright Cengage Learning. Powered by Cognero.

College Algebra 13th edition Gustafson Test Bank

c. $x = 0$
d. $x = -5$
e. $x = -2$

ANSWER: c

17. Solve the formula for *m*.

$f = 4m$

a. $m = 4f$
b. $m = 4$
c. $m = \frac{f}{4}$
d. $m = f$
e. $m = \frac{4}{f}$

ANSWER: c

18. Solve the formula for *w*.

$p = 3k + 6w$

a. $w = p - 3k$
b. $w = \frac{3k - p}{6}$
c. $w = 3p - k$
d. $w = 3k - p$
e. $w = \frac{p - 3k}{6}$

ANSWER: e

19. Solve the formula for *x*.

$f = \frac{k - x}{v}$

a. $x = fv - k$
b. $x = k - fv$
c. $x = kv + f$
d. $x = f - kv$
e. $x = kv - f$

ANSWER: b

Copyright Cengage Learning. Powered by Cognero.

1.1 - Linear Equations and Rational Equations

20. Solve the formula for *r*.

$$\frac{1}{r} = \frac{1}{m} + \frac{1}{j}$$

a. $r = m + j$
b. $r = \frac{mj}{m+j}$
c. $r = \frac{m+j}{mj}$
d. $r = m - j$
e. $r = \frac{mj}{m-j}$

ANSWER: b

21. Solve the equation.

$$\frac{x-4}{x+5} = \frac{x-5}{x-4}$$

a. $-\frac{9}{8}$
b. $\frac{41}{8}$
c. $\frac{41}{4}$
d. $\frac{9}{2}$
e. $\frac{8}{41}$

ANSWER: b

22. *x* represents a real number. Find any restrictions on *x*.

$x + 10 = 2$

a. $x \neq 8$
b. no restrictions
c. $x \neq 2$
d. $x \neq 10$

ANSWER: b

23. *x* represents a real number. Find any restrictions on *x*.

$$\frac{9}{x-5}$$

Copyright Cengage Learning. Powered by Cognero.

College Algebra 13th edition Gustafson Test Bank

1.1 - Linear Equations and Rational Equations

a. $x \neq 9$
b. $x \neq 5$
c. $x \neq -5$
d. no restrictions

ANSWER: b

24. x represents a real number. Find any restrictions on x.

$\sqrt{x} = 8$

a. $x > 0$
b. $x \geq 8$
c. $x \geq 0$
d. no restrictions

ANSWER: c

25. Solve the equation.

$3x + 17 = x + 5$

a. 17
b. 5
c. –12
d. –6

ANSWER: d

26. Solve the equation.

$x(x-9) - 48 = (x-1)^2$

a. –7
b. 7
c. 8
d. –8

ANSWER: a

27. Solve the equation.

$$2x + \frac{2(-4x+2)}{3x+5} = \frac{6x^2}{3x+5}$$

a. 2
b. –2
c. 6
d. –4

ANSWER: b

Copyright Cengage Learning. Powered by Cognero.

College Algebra 13th edition Gustafson Test Bank

1.1 - Linear Equations and Rational Equations

28. Solve the formula for m.

$r = 7m$

a. $m = \frac{7}{\mathrm{r}}$

b. $m = 7r$

c. $m = \frac{r}{7}$

d. $m = \frac{14}{\mathrm{r}}$

ANSWER: c

29. Solve the formula for q.

$p = 9m + 3q$

a. $q = \frac{(p + 3 \cdot m)}{9}$

b. $q = \frac{(p - 3 \cdot m)}{9}$

c. $q = \frac{(p + 9 \cdot m)}{3}$

d. $q = \frac{(p - 9 \cdot m)}{3}$

ANSWER: d

30. Solve the equation.

$\frac{x}{4} + 1 = 9$

a. $x = 36$

b. $x = 25$

c. $x = 40$

d. $x = 30$

e. $x = 32$

ANSWER: e

Match each equation with its solution.

Choose the correct letter for each question.

a. $9(x + 2) = 7x + 36$

Copyright Cengage Learning. Powered by Cognero.

College Algebra 13th edition Gustafson Test Bank

1.1 - Linear Equations and Rational Equations

b. $6(x + 2) = 4x + 24$
c. $8(x + 2) = 7x + 23$

31. $x = 6$
ANSWER: b

32. $x = 7$
ANSWER: c

33. $x = 9$
ANSWER: a

34. Solve the equation.

$$\frac{5x-17}{9} = \frac{1}{3}$$

a. $x = 4$
b. $x = 7$
c. $x = 13$
d. $x = -4$
e. $x = -1$

ANSWER: a

35. Solve the equation.

$$\frac{9}{x+69} - \frac{1}{9} = \frac{1}{x+69}$$

a. $x = 3$
b. $x = 15$
c. $x = -5$
d. $x = 0$
e. $x = -2$

ANSWER: a

Copyright Cengage Learning. Powered by Cognero.

College Algebra 13th edition Gustafson Test Bank

Name:_____ Class:_____ Date:_____

1.2 - Applications of Linear Equations

1. Juan scored 10 points higher on his midterm and 29 points higher on his final than he did on his first exam. If his mean (average) score was 21, what was his score on the first exam?

a. 7
b. 15
c. 8
d. 6
e. 10

ANSWER: c

2. A college student earns $15 per day delivering advertising brochures door-to-door, plus 25 cents for each person he interviews. How many people did he interview on a day when he earned $45?

a. 120
b. 119
c. 121
d. 125
e. 122

ANSWER: a

3. The area of the triangular swimming pool shown in the illustration is doubled by adding a rectangular wading pool. Find the width of the pool (x).

(The area of a triangle = $\frac{1}{2}bh$, and the area of a rectangle = lw).

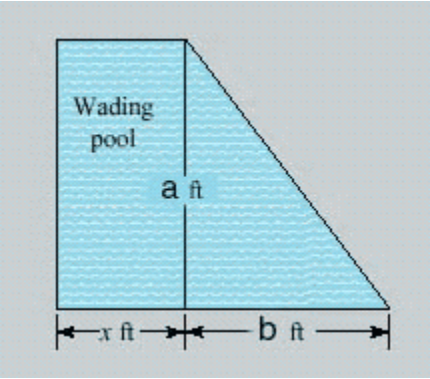

$a = 23;\ b = 18$

a. 12 feet
b. 21 feet
c. 9 feet
d. 8 feet
e. 10 feet

ANSWER: c

4. The trough in the illustration has a cross-sectional area of 75 square inches. Find the depth, h ,of the trough.

Copyright Cengage Learning. Powered by Cognero.

College Algebra 13th edition Gustafson Test Bank

Name:_____ Class:_____ Date:_____

1.2 - Applications of Linear Equations

(Area of a trapezoid = $\frac{1}{2}h(a+b)$)

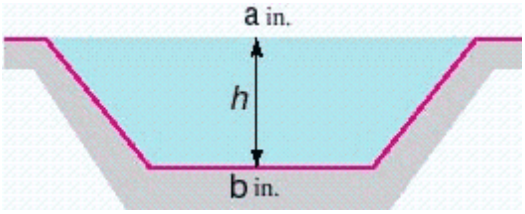

$a = 10;\ b = 5$

a. 14 inches
b. 12 inches
c. 10 inches
d. 13 inches
e. 18 inches

ANSWER: c

5. An executive invests $35,000, some at 10% and some at 8% annual interest. If he receives an annual return of $3,180, how much is invested at each rate?

a. $19,000 at 8%, $16,000 at 10%
b. $20,100 at 10%, $14,900 at 8%
c. $19,000 at 10%, $16,000 at 8%
d. $19,500 at 10%, $15,500 at 8%
e. $20,000 at 10%, $15,000 at 8%

ANSWER: c

6. A full-price ticket for a college basketball game costs $3.00, and a student ticket costs $1.75. If 574 tickets were sold, and the total receipts were $1,364.50, how many tickets were student tickets?

a. 289 tickets
b. 286 tickets
c. 293 tickets
d. 278 tickets
e. 283 tickets

ANSWER: b

7. Of the 549 tickets sold to a movie, 278 were full-price tickets costing $5.00 each. If the gate receipts were $2,541.75, what did a student ticket cost? Round your answer to the nearest cent.

a. $4.75
b. $5.25
c. $3.75
d. $6.25
e. $4.25

Copyright Cengage Learning. Powered by Cognero.

College Algebra 13th edition Gustafson Test Bank

1.2 - Applications of Linear Equations

ANSWER: e

8. After being discounted 40%, a radio sells for $67.20. Find the original price. Round your answer to the nearest cent.

a. $112.00
b. $114.00
c. $117.00
d. $104.00
e. $113.00

ANSWER: a

9. A merchant increases the wholesale cost of a washing machine by 5% to determine the selling price. If the washer sells for $394.80, find the wholesale cost. Round your answer to the nearest cent.

a. $390.00
b. $378.00
c. $369.00
d. $376.00
e. $384.00

ANSWER: d

10. A computer store has fixed costs of $14,525 per month and a unit cost of $780 for every computer it sells. If the store can sell all the computers it can get for $1,195 each, how many must be sold for the store to break even? (The break-even point occurs when costs equal income.)

a. 37 computers
b. 49 computers
c. 28 computers
d. 35 computers
e. 43 computers

ANSWER: d

11. An empty swimming pool can be filled in 12 hours. When full, the pool can be drained in 24 hours. How long will it take to fill the empty pool if the drain is left open?

a. 31 hours
b. 25 hours
c. 24 hours
d. 26 hours
e. 23 hours

ANSWER: c

12. The nurse has 4.8 liter(s) of a solution that is 21.6% alcohol. How many liters of pure alcohol must she add to bring the solution up to a 70.6% concentration?

a. 7.8 liters

Copyright Cengage Learning. Powered by Cognero.

College Algebra 13th edition Gustafson Test Bank

b. 8 liters
c. 8.4 liters
d. 8.11 liters
e. 8.8 liters

ANSWER: b

13. A swimming pool contains 19,000 gallons of water. How many gallons of chlorine must be added to "shock the pool" and bring the water to a $\frac{35}{100}$% solution? Round your answer to two decimal places.

a. 66.23 gallons
b. 66.84 gallons
c. 67.53 gallons
d. 66.73 gallons
e. 67.13 gallons

ANSWER: d

14. Two cars leave Pima Community College traveling in opposite directions. One car travels at 81 mph and the other at 52 mph. In how many hours will they be 399 miles apart?

a. 3 hours
b. 10 hours
c. 2 hours
d. 8 hours
e. 6 hours

ANSWER: a

15. Some bank robbers leave town, speeding at 70 mph. 30 minutes later, the police give chase, traveling at 80 mph. How long will it take the police to overtake the robbers? (Please calculate the time in hours.)

a. 3 hour(s)
b. 3.5 hour(s)
c. 4.5 hours
d. 6.5 hours
e. 4 hours

ANSWER: b

16. One morning, John drove 6 hours before stopping to eat. After lunch, he increased his speed by 10 mph. If he completed a 390-mile trip in 9 hours of driving time, how fast did he drive in the morning?

a. 36 mph
b. 40 mph
c. 48 mph
d. 33 mph
e. 43 mph

Copyright Cengage Learning. Powered by Cognero.

College Algebra 13th edition Gustafson Test Bank

Name:_____ Class:_____ Date:_____

1.2 - Applications of Linear Equations

ANSWER: b

17. A plane can fly 510 mph in still air. If it can fly 540 miles downwind in the same amount of time it can fly 480 miles upwind, find the velocity of the wind.

a. 60 mph
b. 30 mph
c. 40 mph
d. 45 mph
e. 53 mph

ANSWER: b

18. 53.41 cubic millimeters of material was removed by drilling the blind hole shown in the illustration. Find the depth of the hole.
(The volume of a cylinder is given by $V = \pi r^2 h$)

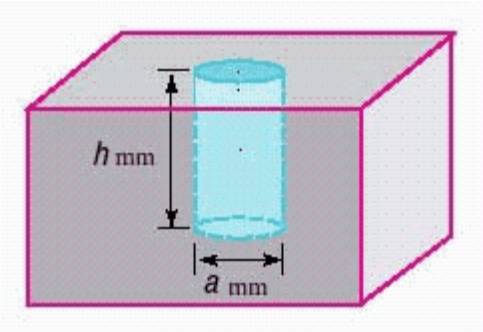

$a = 2$

a. 19 millimeters
b. 14 millimeters
c. 10 millimeters
d. 17 millimeters
e. 25 millimeters

ANSWER: d

19. The Norman window with dimensions as shown in the illustration is a rectangle topped by a semicircle. If the area of the window is 50.14 square feet, find its height *h*.

Copyright Cengage Learning. Powered by Cognero.

College Algebra 13th edition Gustafson Test Bank

1.2 - Applications of Linear Equations

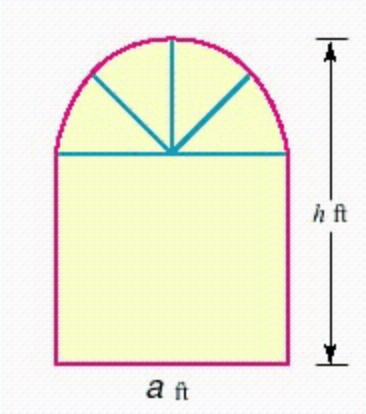

$a = 6$

a. 8 feet
b. 9 feet
c. 7 feet
d. 13 feet
e. 12 feet

ANSWER: b

20. Candy and Tim share a paper route. It takes Candy 45 minutes to deliver all the papers, whereas Tim takes 90 minutes. How long does it take them when they work together? Round your answer to the nearest tenth, if necessary.

a. 45 minutes
b. 22.5 minutes
c. 67.5 minutes
d. 30 minutes
e. none of these

ANSWER: d

21. A storage bin for corn consists of a cylindrical section made of wire mesh, surmounted by a conical tin roof, as shown in the figure. The height of the roof is one-third the entire height of the structure. If the total volume of the structure is 1,400 feet ^{3} and its radius is $r = 10$ feet, what is its height? Round your answer to the nearest tenth.

Hint: use the formulas for the volume of the solid.

Volume of cone = $\frac{1}{3}\pi R^2 h$

Volume of cylinder = $\pi R^2 h$

Copyright Cengage Learning. Powered by Cognero.

College Algebra 13th edition Gustafson Test Bank

1.2 - Applications of Linear Equations

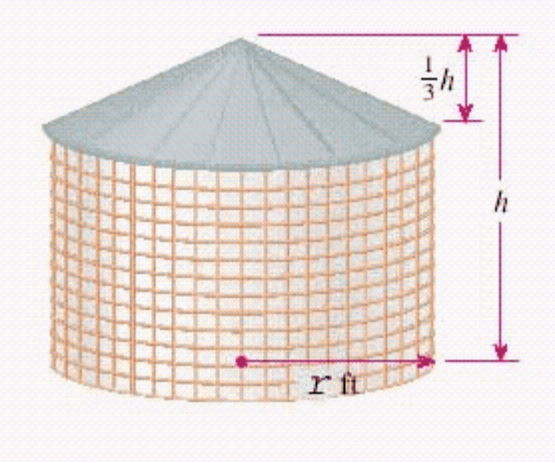

a. 14.0 feet
b. 18.0 feet
c. 20.0 feet
d. 5.7 feet
e. none of these

ANSWER: d

22. Jake can wash a car in 35 minutes, while Harold can wash the same car in 40 minutes. How long will it take them to wash the car if they work together?

a. 35 minutes
b. $\frac{3}{56}$ minutes
c. 5 minutes
d. 30 minutes
e. $\frac{56}{3}$ minutes

ANSWER: e

23. Juan scored 7 points higher on his midterm and 20 points higher on his final than he did on his first exam. If his mean (average) score was 39, what was his score on the first exam?

Please enter your answer as a number without the units.
ANSWER: 30

24. A college student earns $50 per day delivering advertising brochures door-to-door, plus 50 cents for each person he interviews. How many people did he interview on a day when he earned $126?

Please enter your answer as a number without the units.
ANSWER: 152

25. The area of the triangular swimming pool shown in the illustration is doubled by adding a rectangular wading pool. Find the width of the pool (x).

Copyright Cengage Learning. Powered by Cognero.

College Algebra 13th edition Gustafson Test Bank

Name:_____ Class:_____ Date:_____

1.2 - Applications of Linear Equations

(The area of a triangle = $\frac{1}{2}bh$, and the area of a rectangle = lw).

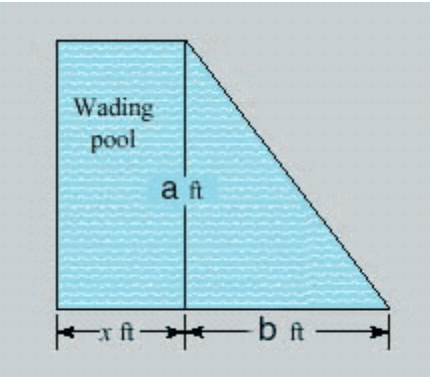

$a = 27;\ b = 20$

Please enter your answer as a number without the units.

ANSWER: 10

26. The trough in the illustration has a cross-sectional area of 115 square inches. Find the depth, h , of the trough.
(Area of a trapezoid = $\frac{1}{2}h(a+b)$)

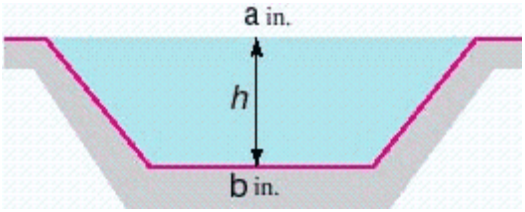

$a = 14;\ b = 9$

Enter your answer as a number without the units.

ANSWER: 10

27. A full-price ticket for a college basketball game costs \$5, and a student ticket costs \$3.00. If 460 tickets were sold, and the total receipts were \$1,626.00 , how many tickets were student tickets?

Please enter your answer as a number without the units.
ANSWER: 337

28. Of the 669 tickets sold to a movie, 395 were full-price tickets costing \$5.00 each. If the gate receipts were \$3,208.00, what did a student ticket cost?

Please enter your answer in dollars and cents. Enter your answer without the units.
ANSWER: 4.50

Copyright Cengage Learning. Powered by Cognero.

College Algebra 13th edition Gustafson Test Bank

Name:_____ Class:_____ Date:_____

1.2 - Applications of Linear Equations

29. On the Illinois certification test for teachers specializing in learning disabilities, a teacher earned the scores shown in the accompanying table. What was the teacher's score in program development?

Human development with special needs	84
Assessment	90
Program development and instruction	?
Professional knowledge and legal issues	83
AVERAGE SCORE	87

a. 91
b. 90
c. 92
d. 89

ANSWER: a

30. The cost per night to stay in a three-bedroom beachfront condo in Myrtle Beach, SC, is $295. This includes a 18% tax. What is the nightly cost?

a. $268
b. $45
c. $250
d. $277

ANSWER: c

Copyright Cengage Learning. Powered by Cognero.

College Algebra 13th edition Gustafson Test Bank

Name:_____ Class:_____ Date:_____

1.3 - Complex Numbers

1. Simplify the expression.

i^{17}

a. $-i$
b. -1
c. -10
d. 1
e. i

ANSWER: e

2. Simplify the expression.

i^{14}

a. -6
b. $-i$
c. -1
d. i
e. 1

ANSWER: c

3. Simplify the expression.

i^{-14}

a. $-i$
b. $-3i$
c. -1
d. 1
e. i

ANSWER: c

4. Find the values of x and y.

$x + 19i = y - yi$

a. $x = 19, y = 19$
b. $x = 19, y = 38$
c. $x = -19, y = -19$
d. $x = 19, y = -19$
e. $x = -19, y = 19$

ANSWER: c

5. Do the operation and express the answer in $a + bi$ form.

Copyright Cengage Learning. Powered by Cognero.

College Algebra 13th edition Gustafson Test Bank

Name:_____ Class:_____ Date:_____

1.3 - Complex Numbers

$(6-7i)+(4+5i)$

a. $-10-2i$
b. $-10+2i$
c. $10+2i$
d. $10-2i$
e. $2-10i$

ANSWER: d

6. Do the operation and express the answer in $a+bi$ form.

$(4-\sqrt{-25})-(6i-10)$

a. $14+11i$
b. $-14+11i$
c. $-14+22i$
d. $14-11i$
e. $-14-11i$

ANSWER: d

7. Do the operation and express the answer in $a+bi$ form.

$(2-\sqrt{-64})+(4+\sqrt{-16})$

a. $6-4i$
b. $-12-8i$
c. $-6+4i$
d. $-12+8i$
e. $6+4i$

ANSWER: a

8. Do the operation and express the answer in $a+bi$ form.

$(5+3i)^2$

a. $-16-3i$
b. $16-5i$
c. $-5+30i$
d. $-16-6i$
e. $16+30i$

ANSWER: e

Copyright Cengage Learning. Powered by Cognero.

College Algebra 13th edition Gustafson Test Bank

Name:_____ Class:_____ Date:_____

1.3 - Complex Numbers

9. Do the operation and express the answer in $a+bi$ form.

$(2+\sqrt{-9})(4-\sqrt{-16})$

a. $2-4i$
b. $-2+4i$
c. $-20+4i$
d. $20-2i$
e. $20+4i$

ANSWER: e

10. Do the operation and express the answer in $a+bi$ form.

$\frac{5}{i^{23}}$

a. $5i$
b. -5
c. 5
d. $-25i$
e. $-5i$

ANSWER: a

11. Do the operation and express the answer in $a+bi$ form.

$\frac{-7}{i^{5}}$

a. $-21i$
b. 7
c. -7
d. $7i$
e. $-7i$

ANSWER: d

12. Do the operation and express the answer in $a+bi$ form.

$\frac{-6}{i^{8}}$

a. -6
b. 6
c. $6i$
d. $-6i$

Copyright Cengage Learning. Powered by Cognero.

College Algebra 13th edition Gustafson Test Bank

e. $-60i$

ANSWER: a

13. Do the operation and express the answer in $a+bi$ form.

$$\frac{1}{6+i}$$

a. $\frac{6}{14}+\frac{i}{14}$

b. $-\frac{6}{7}-\frac{i}{7}$

c. $-\frac{6}{37}-\frac{i}{37}$

d. $\frac{6}{7}+\frac{i}{7}$

e. $\frac{6}{37}-\frac{i}{37}$

ANSWER: e

14. Do the operation and express the answer in $a+bi$ form.

$$\frac{3+i}{10-i\sqrt{3}}$$

a. $\frac{103+\sqrt{3}}{103}-\frac{10+3\sqrt{3}}{103}i$

b. $\frac{30+\sqrt{3}}{103}+\frac{10-3\sqrt{3}}{105}i$

c. $\frac{103-\sqrt{3}}{103}-\frac{10-3\sqrt{3}}{103}i$

d. $\frac{30-\sqrt{3}}{103}+\frac{10+3\sqrt{3}}{103}i$

e. $\frac{30-\sqrt{3}}{103}-\frac{10-3\sqrt{3}}{31}i$

ANSWER: d

15. Find the absolute value

$|3+4i|$

Copyright Cengage Learning. Powered by Cognero.

College Algebra 13th edition Gustafson Test Bank

1.3 - Complex Numbers

a. $-5i$
b. 5
c. 7
d. 3
e. $5i$

ANSWER: b

16. Find the absolute value

$|3-4i|$

a. 25
b. 3
c. 5
d. $4i$
e. $-5i$

ANSWER: c

17. Find the absolute value

$\left|\frac{1}{3+i}\right|$

a. $\sqrt{10}$
b. $\frac{1}{\sqrt{10}}$
c. 10
d. $\frac{1}{-3}$
e. $\frac{1}{10}$

ANSWER: b

18. Find the absolute value

$\left|\frac{4+i}{4-i}\right|$

a. 4
b. $\sqrt{5}$
c. -8
d. -1

Copyright Cengage Learning. Powered by Cognero.

College Algebra 13th edition Gustafson Test Bank

1.3 - Complex Numbers

e. 1

ANSWER: e

19. Which of the following is one of the factors in the complete factorization of $9a^2+16$?

a. $3+4i$
b. $a+4i$
c. $3a-4$
d. $3a-4i$
e. $9a+4i$

ANSWER: d

20. In electronics, the formula $V=IR$ is called **Ohm's law**. It gives the relationship in a circuit between the voltage V (in volts), the current I (in amperes), and the resistance R (in ohms).

Find V when $I=3-2i$ amperes and $R=3+7i$ ohms.

a. $V=i$ volts
b. $V=23+27i$ volts
c. $V=23$ volts
d. $V=27$ volts
e. $V=23+15i$ volts

ANSWER: e

21. Solve the quadratic equation $4x^2+24x+41=0$ by completing the square. Simplify the solutions and write them in $a+bi$ form, separated by a comma.

a. $\frac{-5+\sqrt{6}\cdot i}{2}, \frac{-5-\sqrt{6}\cdot i}{2}$

b. $\frac{5+\sqrt{6}\cdot i}{2}, \frac{5-\sqrt{6}\cdot i}{2}$

c. $\frac{-6+\sqrt{5}\cdot i}{2}, \frac{-6-\sqrt{5}\cdot i}{2}$

d. $\frac{6+\sqrt{5}\cdot i}{2}, \frac{6-\sqrt{5}\cdot i}{2}$

e. $6+\sqrt{5}\cdot i, 6-\sqrt{5}\cdot i$

ANSWER: c

22. Simplify the expression.

Copyright Cengage Learning. Powered by Cognero.

College Algebra 13th edition Gustafson Test Bank

1.3 - Complex Numbers

i^{33}

a. $-i$
b. -1
c. -10
d. 1
e. i

ANSWER: e

23. Simplify the expression.

i^{22}

a. -6
b. $-i$
c. -1
d. i
e. 1

ANSWER: c

24. Simplify the expression.

i^{-34}

a. $-i$
b. $-3i$
c. -1
d. 1
e. i

ANSWER: c

25. Find the values of x and y.

$x + 89i = y - yi$

a. $x = 89, y = 89$
b. $x = 89, y = 178$
c. $x = -89, y = -89$
d. $x = 89, y = -89$
e. $x = -89, y = 89$

ANSWER: c

26. Do the operation and express the answer in $a + bi$ form.

$(7 - 5i) + (3 + 2i)$

Copyright Cengage Learning. Powered by Cognero.

College Algebra 13th edition Gustafson Test Bank

a. $-10-3i$
b. $-10+3i$
c. $10+3i$
d. $10-3i$
e. $3-10i$

ANSWER: d

27. Do the operation and express the answer in $a+bi$ form.

$(7-\sqrt{-9})-(9i-3)$

a. $10+12i$
b. $-10+12i$
c. $-10+24i$
d. $10-12i$
e. $-10-12i$

ANSWER: d

28. Do the operation and express the answer in $a+bi$ form.

$(7-\sqrt{-49})+(10+\sqrt{-4})$

a. $17-5i$
b. $-34-10i$
c. $-17+5i$
d. $-34+10i$
e. $17+5i$

ANSWER: a

29. Do the operation and express the answer in $a+bi$ form.

$(8+7i)^2$

a. $-15-7i$
b. $15-8i$
c. $-8+112i$
d. $-15-14i$
e. $15+112i$

ANSWER: e

30. Do the operation and express the answer in $a+bi$ form.

Copyright Cengage Learning. Powered by Cognero.

College Algebra 13th edition Gustafson Test Bank

Name:_____ Class:_____ Date:_____

1.3 - Complex Numbers

$(4+\sqrt{-16})(5-\sqrt{-9})$

a. $4-8i$
b. $-4+8i$
c. $-32+8i$
d. $32-4i$
e. $32+8i$

ANSWER: e

31. Do the operation and express the answer in $a+bi$ form.

$\frac{12}{i^{35}}$

a. $12i$
b. -12
c. 12
d. $-60i$
e. $-12i$

ANSWER: a

32. Do the operation and express the answer in $a+bi$ form.

$\frac{-13}{i^{25}}$

a. $-39i$
b. 13
c. -13
d. $13i$
e. $-13i$

ANSWER: d

33. Do the operation and express the answer in $a+bi$ form.

$\frac{-11}{i^{28}}$

a. 11
b. -11
c. $11i$
d. $-11i$
e. $-110i$

Copyright Cengage Learning. Powered by Cognero.

College Algebra 13th edition Gustafson Test Bank

1.3 - Complex Numbers

ANSWER: b

34. Do the operation and express the answer in $a+bi$ form.

$$\frac{1}{9+i}$$

a. $\frac{9}{20}+\frac{i}{20}$

b. $-\frac{9}{10}-\frac{i}{10}$

c. $-\frac{9}{82}-\frac{i}{82}$

d. $\frac{9}{82}-\frac{i}{82}$

e. $\frac{9}{10}+\frac{i}{10}$

ANSWER: d

35. Do the operation and express the answer in $a+bi$ form.

$$\frac{7+i}{6-i\sqrt{2}}$$

a. $\frac{38+\sqrt{2}}{38}-\frac{6+7\sqrt{2}}{38}i$

b. $\frac{42-\sqrt{2}}{38}+\frac{6+7\sqrt{2}}{38}i$

c. $\frac{42+\sqrt{2}}{38}+\frac{6-7\sqrt{2}}{40}i$

d. $\frac{38-\sqrt{2}}{38}-\frac{6-7\sqrt{2}}{38}i$

e. $\frac{42-\sqrt{2}}{38}-\frac{6-7\sqrt{2}}{43}i$

ANSWER: b

36. Find the absolute value

$$\left|\frac{1}{9+i}\right|$$

Copyright Cengage Learning. Powered by Cognero.

College Algebra 13th edition Gustafson Test Bank

1.3 - Complex Numbers

a. $\sqrt{82}$

b. 82

c. $\frac{1}{\sqrt{82}}$

d. $\frac{1}{69}$

e. $\frac{1}{82}$

ANSWER: c

37. Factor the expression over the set of complex numbers $9a^2+4$.

a. $(3a+2i)(3a-2i)$

b. $(3a-2i)(3a-2i)$

c. $(3a+4i)(3a-4i)$

d. $(3a+2)(3a-2)$

e. $(a+2i)(a-2i)$

ANSWER: a

38. Simplify the imaginary number.

$-\sqrt{-225}$

a. $15i$

b. $-15i$

c. $225i$

d. $-225i$

ANSWER: b

39. Simplify the imaginary number.

$\frac{\sqrt{-4}}{\sqrt{-49}}$

a. $\frac{2}{7}i$

b. $\sqrt{\frac{2}{7}i}$

c. $\frac{2}{7}$

Copyright Cengage Learning. Powered by Cognero.

College Algebra 13th edition Gustafson Test Bank

d. $-\frac{2}{7}i$

ANSWER: c

40. Factor the expression over the set of complex numbers.

$48b^2 + 363c^2$

a. $3(4b - 11ci)^2$

b. $3(4bi + 11c)(4bi - 11c)$

c. $3(4b + 11ci)^2$

d. $3(4b + 11ci)(4b - 11ci)$

ANSWER: d

41. The impedance Z in an AC (alternating current) circuit is a measure of how much the circuit impedes (hinders) the flow of current through it. The impedance is related to the voltage V and the current I by the following formula.

$V = IZ$

If a circuit has a current of $(0.5 + 2.0i)$ amps and an impedance of $(0.2 - 3.0i)$ ohms, find the voltage.

a. $-5.9 - 1.1i$

b. $6.1 - 1.1i$

c. $-5.9 + 1.1i$

d. $6.1 + 1.1i$

ANSWER: b

Copyright Cengage Learning. Powered by Cognero.

College Algebra 13th edition Gustafson Test Bank

Name:_____ Class:_____ Date:_____

1.4 - Quadratic Equations

1. Complete the square to make the binomial a perfect square trinomial.

$x^2 - 12x$

a. $x^2 - 6x + 36$

b. $x^2 - 12x + 36$

c. $x^2 - 12x + 144$

d. $x^2 - 24x + 12$

e. $x^2 - 24x + 36$

ANSWER: b

2. When completing the square for the equation $x^2 - 10x - 11 = 0$, what number is added to the x terms to complete the square?

a. 100
b. 25
c. –100
d. 5
e. 10

ANSWER: b

3. Solve the equation $x^2 + 18x + 32 = 0$ by completing the square.

a. $x = -2, x = -6$
b. $x = -9, x = 16$
c. $x = -16, x = -9$
d. $x = 6, x = -9$
e. $x = -2, x = -16$

ANSWER: e

4. Solve the equation $x^2 + 2x = 2$ by completing the square.

a. $x = \sqrt{4} - 2, x = -\sqrt{8} - 2$

b. $x = \sqrt{4} - 1, x = -\sqrt{4} - 1$

c. $x = \sqrt{3} - 2, x = -\sqrt{3} - 2$

d. $x = \sqrt{8} - 1, x = -\sqrt{3} - 1$

e. $x = \sqrt{3} - 1, x = -\sqrt{3} - 1$

ANSWER: e

Copyright Cengage Learning. Powered by Cognero.

College Algebra 13th edition Gustafson Test Bank

Name:_____ Class:_____ Date:_____

1.4 - Quadratic Equations

5. Use the quadratic formula to solve the equation.

$x^2 - 8 = 0$

a. $x = 4, x = 2\sqrt{2}$
b. $x = 2\sqrt{2}, x = -2\sqrt{2}$
c. $x = 3, x = -3$
d. $x = \sqrt{6}, x = -\sqrt{6}$
e. $x = 2\sqrt{2}, x = -4$

ANSWER: b

6. After using the quadratic formula to solve the equation, give the sum of the two solutions.

$4x^2 - 16x - 180 = 0$

a. 194
b. 4
c. 189
d. 2
e. 19

ANSWER: b

7. After using the quadratic formula to solve the equation, give the sum of the two solutions.

$3x^2 + 27x + 60 = 0$

a. 13
b. –13
c. 9
d. –65
e. –9

ANSWER: e

8. Use the quadratic formula to solve the equation.

$2x(x + 3) = -2$

a. $x = \dfrac{-3 \pm \sqrt{7}}{4}$

b. $x = \dfrac{-3 \pm \sqrt{5}}{4}$

Copyright Cengage Learning. Powered by Cognero.

College Algebra 13th edition Gustafson Test Bank

c. $x = \dfrac{-5 \pm \sqrt{3}}{4}$

d. $x = \dfrac{-3 \pm \sqrt{7}}{2}$

e. $x = \dfrac{-3 \pm \sqrt{5}}{2}$

ANSWER: e

9. Solve the formula

$$\frac{x^2}{a^2} + \frac{y^2}{f^2} = 1;\ y$$

for the indicated variable.

a. $y = f\sqrt{\left(1 - \frac{x}{a}\right)\left(1 + \frac{x}{a}\right)},\ y = -f\sqrt{\left(1 - \frac{x}{a}\right)\left(1 + \frac{x}{a}\right)}$

b. $y = \sqrt{f(1 - xa)(1 + xa)},\ y = -\sqrt{f(1 - xa)(1 + xa)}$

c. $y = \sqrt{f\left(1 - \frac{x}{a}\right)^2},\ y = -\sqrt{f\left(1 - \frac{x}{a}\right)^2}$

d. $y = f\sqrt{\left(a - \frac{x}{a}\right)\left(a + \frac{x}{a}\right)},\ y = -f\sqrt{\left(a - \frac{x}{a}\right)\left(a + \frac{x}{a}\right)}$

e. $y = \sqrt{f(2 - xa)(1 + xa)},\ y = -\sqrt{f(2 - xa)(1 + xa)}$

ANSWER: a

10. Use the discriminant to determine the nature of the roots of the equation.

$4x^2 + 9x + 8 = 0$

Do not solve the equation.

a. not real
b. real

ANSWER: a

11. Use the discriminant to determine the nature of the roots of the equation.

$-5x^2 + 4x = 9$

Do not solve the equation.

Copyright Cengage Learning. Powered by Cognero.

College Algebra 13th edition Gustafson Test Bank

1.4 - Quadratic Equations

a. not real
b. real

ANSWER: a

12. Does the equation $1.731x^2 - 3.678x + 4.363 = 0$ have any roots that are real numbers?

a. no
b. yes

ANSWER: a

13. Does the equation $2.042x^2 + 6.381x + 6.784 = 0$ have any roots that are real numbers?

a. no
b. yes

ANSWER: a

14. Change the equation $x + 5 = \frac{24}{x}$ to quadratic form and solve it by any method. Give the sum of the two solutions of the equation.

a. –20
b. –17
c. –5
d. –6
e. –4

ANSWER: c

15. Change the equation $2x + 4 + \frac{9x + 10}{2x - 4} = \frac{3}{2x - 4}$ to quadratic form and solve it by any method. Round your answer to two decimal places.

a. 3.00, –1.50
b. 0.75, –3.75
c. 3.75, –1.50
d. 3.75, –0.75
e. –3.00, 0.75

ANSWER: e

16. Use the square root property to solve the equation $(11x - 4)^2 = 18$.

a. $\frac{-4 + 3\sqrt{2}}{11}, \frac{-4 - 3\sqrt{2}}{11}$

Copyright Cengage Learning. Powered by Cognero.

College Algebra 13th edition Gustafson Test Bank

b. $\frac{11+3\sqrt{2}}{4}, \frac{11-3\sqrt{2}}{4}$

c. $\frac{4+3\sqrt{2}}{11}, \frac{4-3\sqrt{2}}{11}$

d. $\frac{3+11\sqrt{2}}{4}, \frac{3-11\sqrt{2}}{4}$

e. $\frac{4+11\sqrt{2}}{3}, \frac{4-11\sqrt{2}}{3}$

ANSWER: c

17. Solve the equation $x^2+2x-15=0$ by factoring.

a. $x=5$
b. $x=-2$
c. $x=-5$
d. $x=-8$
e. $x=-3$
f. $x=3$
g. $x=6$

ANSWER: c, f

18. If x is a solution to the equation $x^2+12x=0$, which of the following is a possible value of $3x+2$?

a. –22
b. 2
c. 23
d. –31
e. 38
f. –34

ANSWER: b, f

19. Identify one of the factors of the equation $x^2+2x-15=0$.

a. $x=-5$
b. $x=-12$
c. $x=10$
d. $x=2$

ANSWER: a

20. Solve the equation $x^2+11x=0$ by factoring.

Copyright Cengage Learning. Powered by Cognero.

College Algebra 13th edition Gustafson Test Bank

1.4 - Quadratic Equations

a. 12, 0
b. 11, 0
c. –12, 0
d. –11, 0

ANSWER: b

21. Solve the equation $16x^2 - 64x = -48$ by factoring.

a. 7, 1
b. –3, 3
c. 1, 3
d. 6, 1

ANSWER: c

22. Use the square root property to solve the equation $(y+9)^2 - 4 = 0$.

You may need to factor an expression.

a. –11, –8
b. –7, –4
c. –7, –2
d. –11, –7

ANSWER: d

23. Use the square root property to solve the equation $x^2 - 18x + 81 = 16$.

You may need to factor an expression.

a. 13, 5
b. 9, 13
c. 18, 5
d. 18, 14

ANSWER: a

24. Complete the square to make the binomial a perfect square trinomial.

$x^2 - 14x$

a. $x^2 - 7x + 49$

b. $x^2 - 14x + 49$

c. $x^2 - 14x + 196$

d. $x^2 - 28x + 14$

Copyright Cengage Learning. Powered by Cognero.

College Algebra 13th edition Gustafson Test Bank

e. $x^2 - 28x + 49$

ANSWER: b

25. Solve the equation $x^2 - 4x - 21 = 0$ by completing the square.

a. –6, 7
b. –3, 9
c. –3, 7
d. 7, 11

ANSWER: c

26. Solve the equation $x^2 + 16x + 28 = 0$ by completing the square.

a. –14, –8
b. 14, 11
c. 2, 2
d. –2, –14

ANSWER: d

27. Solve the equation $x^2 + 2x = 14$ by completing the square.

a. $x = \sqrt{15} - 1, x = -\sqrt{15} - 1$
b. $x = \sqrt{15}, x = -\sqrt{15}$
c. $x = \sqrt{17} - 1, x = -\sqrt{17} - 1$
d. $x = \sqrt{15} - 2, x = -\sqrt{15} - 2$

ANSWER: a

28. Use the quadratic formula to solve the equation.

$x^2 - 81 = 0$

a. $x=9, x=-9$
b. $x=9, x=-9$
c. $x=\sqrt{79}, x=-\sqrt{79}$
d. $x=\sqrt{82}, x=-\sqrt{82}$

ANSWER: b

29. After using the quadratic formula to solve the equation, give the sum of the two solutions.

$9x^2 - 45x - 216 = 0$

a. 14

Copyright Cengage Learning. Powered by Cognero.

College Algebra 13th edition Gustafson Test Bank

b. 5
c. 2.5
d. 224

ANSWER: b

30. Use the quadratic formula to solve the equation.

$9x^2 + 117x + 360 = 0$

a. –5, –8
b. –4, –8
c. –4, –12
d. –5, –11

ANSWER: a

31. Use the quadratic formula to solve the equation.

$4x(x+3) = -3$

a. $x = \frac{-3 \pm \sqrt{29}}{4}$

b. $x = \frac{-3 \pm \sqrt{6}}{4}$

c. $x = \frac{-6 \pm \sqrt{3}}{4}$

d. $x = \frac{-3 \pm \sqrt{29}}{2}$

e. $x = \frac{-3 \pm \sqrt{6}}{2}$

ANSWER: e

32. Does the equation $8.438x^2 - 3.425x + 7.353 = 0$ have any roots that are real numbers?

a. no
b. yes

ANSWER: a

33. Change the equation $x + 3 = \frac{28}{x}$ to quadratic form and solve it by any method.

a. 5, –8

Copyright Cengage Learning. Powered by Cognero.

College Algebra 13th edition Gustafson Test Bank

b. 5, –7
c. 4, –7
d. 4, –8
e. 4, –11

ANSWER: c

34. Change the equation $6x + 1 + \frac{x+5}{6x-1} = \frac{6}{6x-1}$ to quadratic form and solve it by any method. Round your answer to two decimal places.

a. 0.25, –0.44
b. 0.22, –0.47
c. 0.47, –0.44
d. 0.47, –0.22
e. –0.25, 0.22

ANSWER: e

35. Use the discriminant to determine the nature of the roots of each equation. Do not solve the equation.

$9x^2 + 3x + 4 = 0$

a. not real
b. real

ANSWER: a

36. Use the discriminant to determine the nature of the roots of each equation. Do not solve the equation.

$-6x^2 + 5x = 2$

a. not real
b. real

ANSWER: a

37. Does the equation $6.437x^2 + 5.459x + 1.399 = 0$ have any roots that are real numbers?

a. no
b. yes

ANSWER: a

38. Use the Square Root Property to solve the equation.

$y^2 - 72 = 0$

a. $y = -6\sqrt{2}$, $y = 6\sqrt{2}$
b. $y = -6$, $y = 6$

Copyright Cengage Learning. Powered by Cognero.

College Algebra 13th edition Gustafson Test Bank

1.4 - Quadratic Equations

c. $y = -6\sqrt{2}$, $y = 6$

d. $y = -72$, $y = 72$

ANSWER: a

Copyright Cengage Learning. Powered by Cognero.

College Algebra 13th edition Gustafson Test Bank

Name:_____ Class:_____ Date:_____

1.5 - Applications of Quadratic Equations

1. A rectangle is 2 feet longer than it is wide. If its area is 3 square feet, find its dimensions.

a. 1 ft by 3 ft
b. 1 ft by 5 ft
c. 8 ft by 3 ft
d. 2 ft by 2 ft
e. 7 ft by 4 ft

ANSWER: a

2. A rectangle is 2 times as long as it is wide. If the area is 72 square feet, find its perimeter.

a. 72 ft
b. 36 ft
c. 46 ft
d. 39 ft
e. 41 ft

ANSWER: b

3. The side of a square is 3 centimeters shorter than the side of a second square. If the sum of their areas is 225 square centimeters, find the length of one side of the larger square.

a. 12 cm
b. 24 cm
c. 27 cm
d. 15 cm
e. 22 cm

ANSWER: a

4. A piece of tin, $y = 22$ inches on a side, is to have four equal squares cut from its corners, as in the illustration. If the edges are then to be folded up to make a box with a floor area of 100 square inches, find the depth of the box.

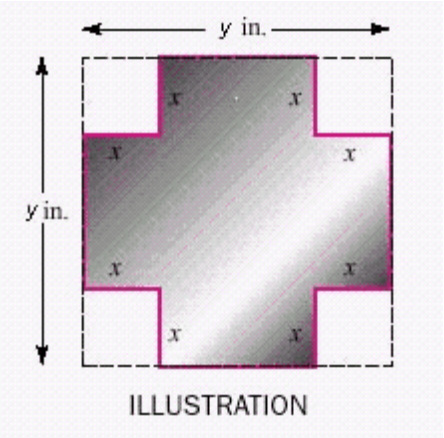

a. 11 in
b. 13 in
c. 6 in

Copyright Cengage Learning. Powered by Cognero.

College Algebra 13th edition Gustafson Test Bank

d. 12 in
e. 9 in

ANSWER: c

5. A piece of sheet metal, 12 inches wide, is bent to form the gutter shown in the illustration. If the cross-sectional area is 18 square inches, find the depth of the gutter.

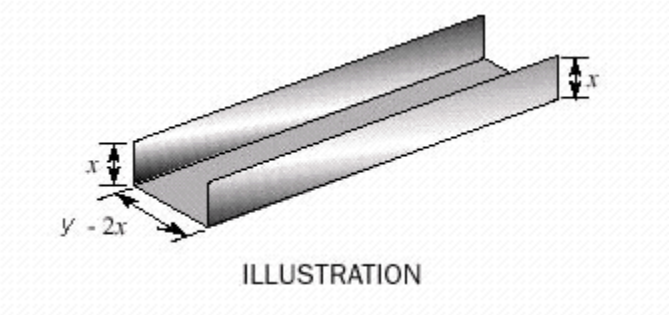

a. 4 in
b. 5 in
c. 6 in
d. 3 in

ANSWER: d

6. A cyclist rides from DeKalb to Rockford, a distance of 150 miles. His return trip takes 2 hours longer because his speed decreases by 20 miles per hour. How fast does he ride each way?

a. 30 mph going and 150 mph returning
b. 70 mph going and 50 mph returning
c. 50 mph going and 40 mph returning
d. 50 mph going and 80 mph returning
e. 50 mph going and 30 mph returning

ANSWER: e

7. A farmer drives a tractor from one town to another, a distance of 200 kilometers. He drives 10 kilometers per hour faster on the return trip, cutting 1 hour off the time. How fast does he drive each way?

a. 70 kph going and 90 returning
b. 40 kph going and 100 returning
c. 70 kph going and 50 returning
d. 40 kph going and 50 returning
e. 50 kph going and 60 returning

ANSWER: d

8. If the speed were increased by 50 mph, a 140-mile trip would take 5 hours less time. How long will the trip take at the slower speed?

a. 7 hours

Copyright Cengage Learning. Powered by Cognero.

College Algebra 13th edition Gustafson Test Bank

b. 140 hours
c. 20 hours
d. 5 hours
e. 25 hours

ANSWER: a

9. The height of a projectile fired upward with an initial velocity of 240 feet per second is given by the formula

$$h = -12t^2 + 240t$$

where h is the height in feet and t is the time in seconds. Find the time required for the projectile to return to earth.

a. 20 sec
b. 45 sec
c. 35 sec
d. 15 sec
e. 30 sec

ANSWER: a

10. A bus company has 2,500 passengers daily, paying a 25 cent fare. For each nickel increase in fare, the company projects that it will lose 50 passengers. What fare increase will produce $940.00 in daily revenue?

a. 30 cents
b. 20 cents
c. 15 cents
d. 16 cents
e. 25 cents

ANSWER: c

11. A jazz group on tour has been drawing average crowds of 1,000 people. It is projected that for every $1 increase in the $20 ticket price, the average attendance will decrease by 70. At what ticket price will nightly receipts be $16,250?

a. $20
b. $25
c. $5
d. $15
e. $10

ANSWER: b

12. A golden rectangle is said to be one of the most visually appealing of all geometric forms. The front of the Parthenon, built in Athens in the 5th century B.C. and shown in the illustration, is a golden rectangle. In a golden rectangle, the length l and the height h of the rectangle must satisfy the equation

$$\frac{l}{h} = \frac{h}{l-h}.$$

If a rectangular billboard is to have a height of 16 feet, how long should it be if it is to form a golden rectangle? Round to

Copyright Cengage Learning. Powered by Cognero.

College Algebra 13th edition Gustafson Test Bank

the nearest tenth of a foot.

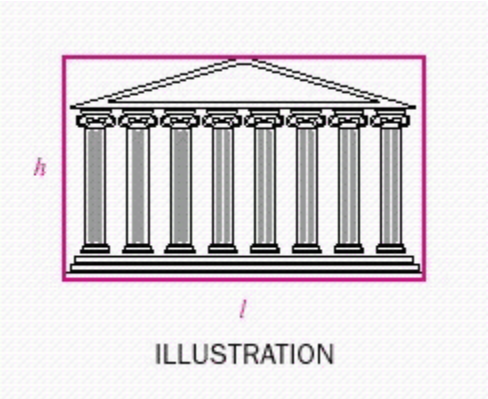

a. 27.9 ft
b. 25.9 ft
c. 26.1 ft
d. 26.9 ft
e. 25.6 ft

ANSWER: b

13. Two pipes are used to fill a water storage tank. The first pipe can fill the tank in 15 hours, and the two pipes together can fill the tank in 4 hours less time than the second pipe alone. How long would it take for the second pipe to fill the tank?

a. 10 hours
b. 20 hours
c. 14 hours
d. 17 hours
e. 6 hours

ANSWER: a

14. A hose can fill a swimming pool in 6 hours. Another hose needs 3 more hours to fill the pool than the two hoses combined. How long would it take the second hose to fill the pool?

a. 6 hours
b. 11 hours
c. 12 hours
d. 3 hours
e. 9 hours

ANSWER: a

15. Working together, Sarah and Heidi can milk the cows in 4 hours. If they work alone, it takes Heidi 6 hours longer than it takes Sarah. How long would it take Heidi to milk the cows alone?

a. 13 hours
b. 15 hours

Copyright Cengage Learning. Powered by Cognero.

College Algebra 13th edition Gustafson Test Bank

c. 19 hours
d. 9 hours
e. 12 hours

ANSWER: e

16. If two opposite sides of a square are increased by 5 meters and the other sides are decreased by 2 meters, the area of the rectangle that is formed is 78 square meters. Find the area of the original square.

a. 64 square meters
b. 85 square meters
c. 81 square meters
d. 100 square meters
e. 67 square meters

ANSWER: a

17. Maude and Matilda each have a bank CD. Maude's is $1,500 larger than Matilda's, but Maude's interest rate is 1% less. Last year Maude received interest of $715, and Matilda received $560. Find the rate of interest for each CD.

a. Maude at 16%; Matilda at 17%
b. Maude at 13%; Matilda at 19%
c. Maude at 13%; Matilda at 15%
d. Maude at 15%; Matilda at 19%
e. Maude at 13%; Matilda at 14%

ANSWER: e

18. Some mathematics professors would like to purchase a $120 microwave oven for the department workroom. If 1 of the professors don't contribute, everyone's share will increase by $10. How many professors are in the department?

a. 12
b. 4
c. 17
d. 6
e. 8

ANSWER: b

19. If a wagon wheel had 15 more spokes, the angle between spokes would decrease by 54°. How many spokes does the wheel have?

a. 5
b. 11
c. 6
d. 8
e. 2

ANSWER: a

20. Find the dimensions of a rectangle whose area is 589 cm^2 and whose perimeter is 100 cm.

Copyright Cengage Learning. Powered by Cognero.

College Algebra 13th edition Gustafson Test Bank

a. 31 cm by 19 cm
b. 36 cm by 19 cm
c. 62 cm by 19 cm
d. 31 cm by 29 cm
e. 62 cm by 29 cm

ANSWER: a

21. A rectangle is 5 feet shorter than it is wide. If its area is 24 square feet, find its dimensions.

a. 8 ft by 3 ft
b. 8 ft by 8 ft
c. 11 ft by 10 ft
d. 5 ft by 4 ft
e. 14 ft by 11 ft

ANSWER: a

22. A cyclist rides from DeKalb to Rockford, a distance of 112.5 kilometers. His return trip takes 2 hours longer because his speed decreases by 20 kilometers per hour. How fast does he ride each way?

a. 25 kph going and 135 kph returning
b. 65 kph going and 45 kph returning
c. 45 kph going and 35 kph returning
d. 45 kph going and 65 kph returning
e. 45 kph going and 25 kph returning

ANSWER: e

23. A farmer drives a tractor from one town to another, a distance of 112.5 miles. He drives 20 miles per hour faster on the return trip, cutting 2 hour(s) off the time. How fast does he drive each way?

a. 55 mph going and 80 returning
b. 25 mph going and 90 returning
c. 55 mph going and 45 returning
d. 25 mph going and 45 returning
e. 45 mph going and 55 returning

ANSWER: d

24. Maude and Matilda each have a bank CD. Maude's is $750 larger than Matilda's, but Maude's interest rate is 5% less. Last year Maude received interest of $270, and Matilda received $412.5. Find the rate of interest for each CD.

a. Maude at 9%; Matilda at 14%
b. Maude at 6%; Matilda at 16%
c. Maude at 6%; Matilda at 12%
d. Maude at 12%; Matilda at 16%
e. Maude at 6%; Matilda at 11%

ANSWER: e

Copyright Cengage Learning. Powered by Cognero.

College Algebra 13th edition Gustafson Test Bank

Name:_____ Class:_____ Date:_____

1.5 - Applications of Quadratic Equations

25. Find the dimensions of a rectangle whose area is 300 cm^2 and whose perimeter is 80 cm.

a. 10 cm by 30 cm
b. 15 cm by 30 cm
c. 20 cm by 30 cm
d. 10 cm by 40 cm
e. 20 cm by 40 cm

ANSWER: a

26. A bus company has 5000 passengers daily, paying a 40 cent fare. For each nickel increase in fare, the company projects that it will lose 55 passengers. What fare increase will produce $2,225.25 in daily revenue?

a. 20 cents
b. 10 cents
c. 5 cents
d. 6 cents
e. 15 cents

ANSWER: c

27. The length of a rectangular jumbotron is 80 feet more than its width. If the jumbotron has an area of 12,800 square feet, find its dimensions.

a. 80 ft by 80 ft
b. 160 ft by 80 ft
c. 80 ft by 160 ft
d. 80 ft by 160 ft

ANSWER: c

28. A large movie screen is a theater in Sydney, Australia. The rectangular screen has an area of 10,925 square feet. Find the dimensions of the screen if it is 20 feet longer than it is wide.

a. 20 ft by 546 ft
b. 95 ft by 115 ft
c. 20 ft by 40 ft
d. 115 ft by 135 ft

ANSWER: b

29. A baseball diamond is a square, 50 feet on a side. A shortstop for the Los Angeles Dodgers fields a grounder at a point halfway between second base and third base. How far will he have to throw the ball to make an out at first base?

a. 25 ft
b. $25\sqrt{5}$ ft
c. 100 ft
d. $50\sqrt{2}$ ft

ANSWER: b

Copyright Cengage Learning. Powered by Cognero.

College Algebra 13th edition Gustafson Test Bank

1.5 - Applications of Quadratic Equations

30. The base of a triangle is one-half as long as its height. If the area of the triangle is 25 square yards, find its height.

a. 10 yard
b. 5 yard
c. 15 yard
d. 20 yard

ANSWER: a

31. A water balloon is tossed from the window of college student's dormitory. The equation $h = -4.4t^2 + 6.9t + 11.3$ can be used to determine the height h in meters of the water balloon at time t in seconds after it is released. When will the water balloon hit the ground? Round to the nearest tenth.

a. 2.2 s
b. 2.8 s
c. 1.3 s
d. 2.6 s

ANSWER: d

Copyright Cengage Learning. Powered by Cognero.

College Algebra 13th edition Gustafson Test Bank

Name:_____ Class:_____ Date:_____

1.6 - Other Types of Equations

1. The power generated by a windmill is related to the velocity of the wind by the formula

$$v = \sqrt[3]{\frac{P}{0.02}}$$

where P is the power (in watts) and v is the velocity of the wind (in mph). Find the velocity of the wind when the windmill is generating 200 watts of power. Round yout answer to two decimal places.

a. $v = 11.85$ mph
b. $v = 21.54$ mph
c. $v = 26.93$ mph
d. $v = 464.07$ mph
e. $v = 99.97$ mph

ANSWER: b

2. Solve the equation for real values of the variable by factoring. Give the sum of all solutions of the equation.

$$x^3 - 7x^2 + 6x = 0$$

a. 7
b. 9
c. 6
d. 11
e. 8

ANSWER: a

3. Solve the equation for real values of the variable by factoring or by making an appropriate substitution. Give the sum of all solutions of the equation.

$$8m^{\frac{2}{3}} - 88m^{\frac{1}{3}} + 224 = 0$$

a. 403
b. 412
c. 409
d. 407
e. 404

ANSWER: d

4. Solve the equation for real values of the variable by factoring or by making an appropriate substitution. Give the sum of all solutions of the equation.

$$9p - 90p^{\frac{1}{2}} + 216 = 0$$

Copyright Cengage Learning. Powered by Cognero.

College Algebra 13th edition Gustafson Test Bank

1.6 - Other Types of Equations

a. 52
b. 47
c. 49
d. 48
e. 54

ANSWER: a

5. Find the sum of all real solutions of the equation.

$\sqrt{7x+2} = \sqrt{4x+29}$

a. 9
b. –9
c. 29
d. –29
e. 0

ANSWER: a

6. Find the sum of all real solutions of the equation.

$\sqrt[3]{6x+699} = 9$

a. 25
b. 5
c. 6
d. –6
e. –5

ANSWER: b

7. Find the sum of all real solutions of the equation.

$\sqrt{x^2+64} = x+4$

a. 0
b. 64
c. 12
d. –12
e. 6

ANSWER: e

8. Find the sum of all real solutions of the equation.

$\sqrt{y+7} = 5-y$

Copyright Cengage Learning. Powered by Cognero.

College Algebra 13th edition Gustafson Test Bank

1.6 - Other Types of Equations

a. 7
b. 2
c. 5
d. 0
e. None of the above

ANSWER: b

9. Find the sum of all real solutions of the equation.

$$\sqrt{\frac{x^2-60}{x-9}} = 2\sqrt{2}$$

a. 16
b. 12
c. 14
d. 11
e. 8

ANSWER: e

10. Find all real solutions of the equation.

$$\sqrt{x-3} = 8$$

a. 67
b. 8
c. 3
d. 0
e. None of the above

ANSWER: a

11. Solve the equation for real values of the variable by factoring.

$$x^4 - 25x^2 + 144 = 0$$

a. $x = 4$
b. $x = 3$
c. $x = -16$
d. $x = 0$
e. $x = -3$
f. $x = 16$
g. $x = -4$

ANSWER: a, b, e, g

Copyright Cengage Learning. Powered by Cognero.

College Algebra 13th edition Gustafson Test Bank

Name:_____ Class:_____ Date:_____

1.6 - Other Types of Equations

12. Solve the equation for real values of the variable by factoring or by making an appropriate substitution.

$$z^{\frac{3}{2}} - 8z^{\frac{1}{2}} = 0$$

a. $z = 8$
b. $z = 64$
c. $z = 0$
d. $z = -64$
e. $z = -8$

ANSWER: a, c

13. Solve the equation for real values of the variable by factoring or by making an appropriate substitution.

$$5t^{\frac{1}{3}} - 35t^{\frac{1}{6}} + 60 = 0$$

a. $t = 4$
b. $t = 732$
c. $t = 729$
d. $t = 3$
e. $t = 4{,}096$

ANSWER: c, e

14. Find all real solutions of the equation.

$$\sqrt{x+18} = 2\sqrt{x}$$

a. $x = 0$
b. $x = -18$
c. $x = 6$
d. $x = 18$
e. $x = -6$

ANSWER: c

15. Find all real solutions of the equation.

$$\sqrt[4]{3t+6} = 3$$

a. $t = -25$
b. $t = 3$
c. $t = 25$
d. $t = 81$

Copyright Cengage Learning. Powered by Cognero.

College Algebra 13th edition Gustafson Test Bank

e. no solution

ANSWER: c

16. Find all real solutions of the equation.

$x - \sqrt{11x - 28} = 0$

a. $x = -7$
b. $x = 0$
c. $x = 7$
d. $x = 11$
e. $x = -4$
f. $x = 4$

ANSWER: c, f

17. Find all real solutions of the equation.

$\frac{\sqrt{x^2 - 16}}{\sqrt{4x - 14}} = \sqrt{2}$

a. $x = 6$
b. $x = 2$
c. $x = -2$
d. $x = -12$
e. $x = -6$

ANSWER: a

18. Find all real solutions of the equation.

$\sqrt{r} + \sqrt{r + 11} = 11$

a. $r = 11$
b. $r = 25$
c. $r = -11$
d. $r = -25$
e. no solution

ANSWER: b

19. Find all real solutions of the equation.

$\sqrt{\sqrt{x + 16} - \sqrt{x - 41}} = \sqrt{3}$

a. $x = 16$

Copyright Cengage Learning. Powered by Cognero.

College Algebra 13th edition Gustafson Test Bank

b. $x = 1{,}680$
c. $x = 105$
d. $x = -16$
e. $x = -105$

ANSWER: c

20. Solve the equation for real values of the variable by factoring.

$x^3 - 9x^2 + 20x = 0$

a. 5, 4, 0
b. 5, 4
c. 5, 0
d. 4, 0
e. 1, 5, 4

ANSWER: a

21. Solve the equation for real values of the variable by factoring.

$x^4 - 65x^2 + 784 = 0$

a. 7, –7, 4, –4
b. 7, –7, 4
c. 7, –7, 49, –4
d. 7, 16, 4, –4
e. –65, –7, 4, –4

ANSWER: a

22. Solve the equation for real values of the variable by factoring.

$z^{\frac{3}{2}} - 5z^{\frac{1}{2}} = 0$

a. 5, 0
b. 5
c. 25
d. 5, 25
e. 25, 0

ANSWER: a

23. Solve the equation for real values of the variable by factoring.

$2m^{\frac{2}{3}} - 24m^{\frac{1}{3}} + 64 = 0$

Copyright Cengage Learning. Powered by Cognero.

College Algebra 13th edition Gustafson Test Bank

1.6 - Other Types of Equations

a. 512, 64
b. 2, 24
c. 2, 64
d. 8, 4
e. 2, 512

ANSWER: a

24. Solve the equation for real values of the variable by factoring.

$$9p - 126p^{\frac{1}{2}} + 405 = 0$$

a. 81, 25
b. 81, 405
c. 405, 25
d. −81, 25
e. 81,− 25

ANSWER: a

25. Find all real solutions of the equation.

$$x - \sqrt{13x - 42} = 0$$

a. 7, 6
b. –7, 6
c. 13, 6
d. 7, –6
e. 7, 13

ANSWER: a

26. Find all real solutions of the equation.

$$\sqrt[3]{27x^3 - 945} = 3x - 15$$

a. $x = 2$ or $x = 3$
b. $x = -2$ or $x = -3$
c. $x = 2$ or $x = -3$
d. $x = -2$ or $x = 3$

ANSWER: a

27. Find all real solutions of the equation.

Copyright Cengage Learning. Powered by Cognero.

College Algebra 13th edition Gustafson Test Bank

1.6 - Other Types of Equations

$$\sqrt{\frac{x^2-33}{x-5}}=2\sqrt{2}$$

a. $x=7$ or $x=1$
b. $x=-7$ or $x=-1$
c. $x=-7$ or $x=1$
d. $x=7$ or $x=-1$

ANSWER: a

28. Solve the equation for real values of the variable by factoring.

$$4t^{\frac{1}{3}}-28t^{\frac{1}{6}}+48=0$$

a. 729, 4,096
b. 729, –4,096
c. –729, 4,096
d. 4, –4,096
e. 48, 4,096

ANSWER: a

29. Use factoring to solve the equation.

$$40a^3-27a^2-4a=0$$

a. $a=-\frac{1}{8}, a=0, a=\frac{4}{5}$
b. $a=-\frac{4}{5}, a=0, a=\frac{1}{8}$
c. $a=-\frac{4}{5}, a=-\frac{1}{8}, a=0$
d. $a=0, a=\frac{1}{8}, a=\frac{4}{5}$

ANSWER: a

30. Use factoring to solve the equation.

$$x^4-60x^2=256$$

a. $x=\pm 8,\ \pm 8i$
b. $x=\pm 2,\ \pm 8i$
c. $x=\pm 8,\ \pm 2i,$

Copyright Cengage Learning. Powered by Cognero.

College Algebra 13th edition Gustafson Test Bank

d. $x = \pm 2,\ \pm 2i$

ANSWER: c

31. Solve the equation by factoring or by making an appropriate substitution.

$72p + p^{1/2} = 1$

a. $\frac{1}{8}$

b. $\frac{1}{81}$

c. $\frac{1}{64}$

d. $\frac{1}{9}$

ANSWER: b

32. Solve the equation by factoring or by making an appropriate substitution.

$2y^{-2} + 17y^{-1} - 9 = 0$

a. $y = -2,\ y = \frac{1}{9}$

b. $y = -2,\ y = -\frac{1}{9}$

c. $y = \frac{1}{9},\ y = 2$

d. $y = -\frac{1}{9},\ y = 2$

ANSWER: d

33. The *effective rate of interest r* earned by an investment is given by the following formula where *P* is the initial investment that grows to value
A after *n* years.

$$r = \sqrt[n]{\frac{A}{P}} - 1$$

If a diamond buyer got $7,000 for a 1.03-carat diamond that he had purchased 4 years earlier and earned an annual rate of return of 6.5% on the investment, what did he originally pay for the diamond? Round your answer to the nearest dollar.

a. $5,441
b. $6,573

Copyright Cengage Learning. Powered by Cognero.

College Algebra 13th edition Gustafson Test Bank

c. $9,005
d. $7,455

ANSWER: a

Copyright Cengage Learning. Powered by Cognero.

College Algebra 13th edition Gustafson Test Bank

Name:_____ Class:_____ Date:_____

1.7 - Inequalities

1. Solve the inequality.

$2x - 15 < -7$

a. $(4, \infty)$
b. $[4, \infty)$
c. $(-4, \infty)$
d. $(-\infty, 4)$
e. $(-\infty, 4]$

ANSWER: d

2. Solve the inequality.

$2x - 13 \geq -3$

a. $(-\infty, 5)$
b. $(5, \infty)$
c. $[-5, \infty)$
d. $[5, \infty)$
e. $(-\infty, 5]$

ANSWER: d

3. Solve the inequality.

$-2x - 11 > -5$

a. $[-3, \infty)$
b. $[3, \infty)$
c. $(-\infty, -3)$
d. $(-\infty, 3]$
e. $(-\infty, 3)$

ANSWER: c

4. Solve the inequality.

$\frac{1}{5}x - 11 > -9$

a. $[-10, \infty)$
b. $(-\infty, 10)$
c. $(-\infty, 10]$
d. $[10, \infty)$
e. $(10, \infty)$

Copyright Cengage Learning. Powered by Cognero.

College Algebra 13th edition Gustafson Test Bank

1.7 - Inequalities

ANSWER: e

5. Solve the inequality.

$$\frac{22(x-8)}{5} \geq \frac{11(x+4)}{4}$$

a. $(-28, \infty)$
b. $(28, \infty)$
c. $[-28, \infty)$
d. $[28, \infty)$
e. none of the above

ANSWER: d

6. Solve the inequality.

$$\frac{8}{5}x - \frac{5}{2}x \leq \frac{5}{4}\left(x + \frac{8}{5}\right) + \frac{1}{5}$$

a. $\left(-\infty, -\frac{44}{43}\right)$
b. $\left(-\frac{44}{43}, \infty\right)$
c. $(-\infty, -\frac{44}{43}]$
d. $[-\frac{44}{43}, \infty)$
e. $(-\infty, \frac{44}{43}]$

ANSWER: d

7. Solve the inequality.

$$13 \geq \frac{x-1}{4} > 4$$

a. $(17, 53)$
b. $(17, 53]$
c. $(-\infty, 17] \cup (53, \infty)$
d. $(-\infty, 17) \cup [53, \infty)$
e. $(-\infty, 17] \cup [53, \infty)$

ANSWER: b

Copyright Cengage Learning. Powered by Cognero.

College Algebra 13th edition Gustafson Test Bank

Name:_____ Class:_____ Date:_____

1.7 - Inequalities

8. Solve the inequality.

$5 + x \geq 3x - 9 > 5x + 11$

a. $[7, \infty)$
b. $(-\infty, -10)$
c. $(-10, 7]$
d. $(-\infty, -10]$
e. $[-10, 7)$

ANSWER: b

9. Solve the inequality.

$4x^2 + 12x > -9$

a. $(-\infty, -\frac{3}{2}) \cup (-\frac{3}{2}, \infty)$
b. $(-\infty, -\frac{3}{2}) \cup (\frac{3}{2}, \infty)$
c. $(-\infty, -\frac{3}{2}) \cup [\frac{3}{2}, \infty)$
d. $(-\infty, \frac{3}{2}) \cup (\frac{3}{2}, \infty)$
e. $(-\infty, \frac{3}{2}] \cup [\frac{3}{2}, \infty)$

ANSWER: a

10. Solve the inequality.

$\frac{x-4}{x+3} \geq 0$

a. $(-\infty, -3) \cup [4, \infty)$
b. $(-\infty, -3] \cup [4, \infty)$
c. $(3, 4]$
d. $[4, \infty)$
e. $[3, 4]$

ANSWER: a

11. Solve the inequality.

Copyright Cengage Learning. Powered by Cognero.

College Algebra 13th edition Gustafson Test Bank

Name:_____ Class:_____ Date:_____

1.7 - Inequalities

$$\frac{x^2+4x}{x^2-36} \le 0$$

a. $(-\infty, -6) \cup [-4, 0] \cup (6, \infty)$
b. $(-\infty, -6) \cup [-4, 0] \cup [6, \infty)$
c. $[-6, -4] \cup (0, 6)$
d. $[-4, 0]$
e. $(-6, -4] \cup [0, 6)$

ANSWER: e

12. Solve the inequality.

$$\frac{x^2-5x+6}{x^2+x-6} \ge 0$$

a. $(-\infty, -3] \cup [3, \infty)$
b. $(-\infty, 3] \cup [3, \infty)$
c. $(-3, 3]$
d. $(-3, 2) \cup (2, 3]$
e. $(-\infty, -3) \cup [3, \infty)$

ANSWER: e

13. Solve the inequality.

$$\frac{x^2-11x+30}{x^2+4x+4} \ge 0$$

a. $(-\infty, -2) \cup (-2, 5] \cup [6, \infty)$
b. $(-\infty, -2] \cup (-2, 5] \cup [6, \infty)$
c. $(-\infty, -2) \cup (-2, 5) \cup (6, \infty)$
d. $(-\infty, -2) \cup [6, \infty)$
e. $(-\infty, -2) \cup [5, 6)$

ANSWER: a

14. Solve the inequality.

$$\frac{5}{x} > 2$$

a. $(0, 2.5]$

Copyright Cengage Learning. Powered by Cognero.

College Algebra 13th edition Gustafson Test Bank

b. $(0, 2.5)$
c. $[0, 2.5]$
d. $(-\infty, 2.5)$
e. $[0, 2.5)$

ANSWER: b

15. Solve the inequality.

$$\frac{40}{x^2-9} \geq 1$$

a. $[-7, -3] \cup [3, 7]$
b. $[-7, 7]$
c. $(-\infty, -7] \cup [-3, 3) \cup [7, \infty)$
d. $[-7, -3) \cup (3, 7]$
e. $(-\infty, -7] \cup (-3, 3) \cup [7, \infty)$

ANSWER: d

16. Solve the inequality.

$$\frac{10}{x-4} \leq 2$$

a. $(-\infty, 4) \cup [9, \infty)$
b. $(-\infty, 4] \cup [9, \infty)$
c. $(-\infty, 4] \cup (9, \infty)$
d. $[9, \infty)$
e. $(-\infty, 4) \cup (9, \infty)$
f. $(4, 9]$

ANSWER: a

17. A student can afford to spend up to $2,436 on a new computer and some CD-ROMs. The computer costs $1,639 and the CD-ROMs cost $23 each. If she buys the computer, how many CD-ROMs can she buy?

a. 34
b. 41
c. 33
d. 39
e. 74

ANSWER: a

18. The perimeter of the square is to be from 16 meters to 28 meters. Find the range of values for its area *S*.

Copyright Cengage Learning. Powered by Cognero.

College Algebra 13th edition Gustafson Test Bank

1.7 - Inequalities

a. $64 < S < 196$
b. $16 < S < 49$
c. $4 < S < 7$
d. $256 < S < 784$
e. none of the above

ANSWER: b

19. Express the relationship $8 < C < 20$ in terms of F, if $F = \frac{3}{2}C + 11$.

a. $24 < F < 42$
b. $22 < F < 40$
c. $21 < F < 39$
d. $27 < F < 37$
e. $23 < F < 41$

ANSWER: e

20. A riverboat theater offers bus tours to groups on the following basis. Hiring the bus costs the group $420, to be shared equally by the group members. Theater tickets, normally $30 each, are discounted by 25 cents times the number of people in the group. How many members must be in the group so that the cost of the theater tour (bus fare plus theater ticket) is less than $38 per person?

a. at least 16 members
b. at least 29 members
c. at least 28 members
d. at least 20 members
e. at least 32 members

ANSWER: b

21. Which of the inequalities are equivalent to the given one?

$a > b$ and $c > 0$

a. $ac > bc$
b. $\frac{a}{c} > \frac{b}{c}$
c. $a + c < b + c$
d. $ac < bc$
e. $\frac{a}{c} < \frac{b}{c}$

ANSWER: a, b

22. Solve the inequality and write the answer in interval notation.

$2x - 15 > -3$

Copyright Cengage Learning. Powered by Cognero.

College Algebra 13th edition Gustafson Test Bank

1.7 - Inequalities

a. $(-\infty, 6)$
b. $(6, \infty)$
c. $[6, \infty)$
d. $(-\infty, 6]$
e. $(-6, 6)$

ANSWER: b

23. Solve the inequality and write the answer in interval notation.

$4x - 5 \leq -7$

a. $[0.5, \infty)$
b. $(-0.5, \infty)$
c. $(-\infty, -0.5]$
d. $[-0.5, \infty)$
e. $(-\infty, -0.5)$

ANSWER: c

24. Solve the inequality and write the answer in interval notation.

$-2x - 15 < -3$

a. $(-\infty, 6)$
b. $(-\infty, 6]$
c. $(-6, \infty)$
d. $(-6, 6]$
e. $[-6, \infty)$

ANSWER: c

25. Solve the inequality and write the answer in interval notation.

$\frac{1}{5}x - 13 < -7$

a. $(30, \infty)$
b. $[30, \infty)$
c. $(-\infty, 30]$
d. $(-30, \infty)$
e. $(-\infty, 30)$

ANSWER: e

Copyright Cengage Learning. Powered by Cognero.

College Algebra 13th edition Gustafson Test Bank

Name:_____ Class:_____ Date:_____

1.7 - Inequalities

26. Solve the inequality and write the answer in interval notation.

$$\frac{16(x-2)}{5} \geq \frac{8(x+1)}{4}$$

a. $[7, \infty)$
b. $(7, \infty)$
c. $(-\infty, 7)$
d. $(-\infty, 7]$
e. $[-7, \infty)$

ANSWER: a

27. Solve the inequality and write the answer in interval notation.

$$12 \geq \frac{x-9}{5} > 2$$

a. $(19, 69]$
b. $[19, 69)$
c. $[19, 69]$
d. $(19, 69)$
e. $(12, 69]$

ANSWER: a

28. Solve the inequality and write the answer in interval notation.

$9x + 8 \geq 13x + 2 > 3x + 4$

a. $(\frac{1}{5}, \frac{3}{2}]$
b. $(\frac{1}{5}, \frac{3}{2})$
c. $[\frac{1}{5}, \frac{3}{2}]$
d. $(-\frac{1}{5}, \frac{3}{2}]$
e. $\left(-\infty, \frac{1}{5}\right) \cup \left(\frac{3}{2}, \infty\right)$

ANSWER: a

29. Solve the inequality and write the answer in interval notation.

Copyright Cengage Learning. Powered by Cognero.

College Algebra 13th edition Gustafson Test Bank

Name:_____ Class:_____ Date:_____

1.7 - Inequalities

$18x^2 + 9x \le -1$

a. $\left[-\frac{1}{3}, -\frac{1}{6}\right]$

b. $[-\frac{1}{3}, -\frac{1}{6})$

c. $(-\infty, -\frac{1}{3}] \cup [-\frac{1}{6}, \infty)$

d. $\left(-\frac{1}{3}, -\frac{1}{6}\right)$

e. $\left(-\infty, -\frac{1}{3}\right) \cup \left(-\frac{1}{6}, \infty\right)$

ANSWER: a

30. Solve the inequality and write the answer in interval notation.

$$\frac{x^2 + 7x}{x^2 - 100} \le 0$$

a. $(-10, -7] \cup [0, 10)$

b. $(-\infty, -10) \cup [-7, 0] \cup (10, \infty)$

c. $(-\infty, -10) \cup [-7, 0] \cup [10, \infty)$

d. $[-10, -7] \cup (0, 10)$

e. $[-7, 0]$

ANSWER: a

31. Solve the inequality and write the answer in interval notation.

$$\frac{x^2 - 11x + 18}{x^2 + 2x - 8} \ge 0$$

a. $(-\infty, -4] \cup [11, \infty)$

b. $(-\infty, 4] \cup [9, \infty)$

c. $(-4, 9]$

d. $(-4, 2) \cup (2, 9]$

e. $(-\infty, -4) \cup [9, \infty)$

ANSWER: e

32. Solve the inequality. Write the answer in interval notation.

Copyright Cengage Learning. Powered by Cognero.

College Algebra 13th edition Gustafson Test Bank

Name:_____ Class:_____ Date:_____

1.7 - Inequalities

$$\frac{6}{x-13} \le 2$$

a. $(-\infty, 13) \cup [16, \infty)$
b. $(-\infty, 13] \cup [16, \infty)$
c. $(-\infty, 13] \cup (16, \infty)$
d. $[16, \infty)$
e. $(-\infty, 13) \cup (16, \infty)$
f. $(13, 16]$

ANSWER: a

33. Solve the inequality and write the answer in interval notation.

$$\frac{171}{x^2-25} \ge 1$$

a. $[-14, -5] \cup [5, 14]$
b. $[-14, 14]$
c. $(-\infty, -14] \cup [-5, 5) \cup [14, \infty)$
d. $[-14, -5) \cup (5, 14]$
e. $(-\infty, -14] \cup (-5, 5) \cup [14, \infty)$

ANSWER: d

34. The perimeter of the square is to be from 12 meters to 36 meters. Find the range of values for its area *S*.

a. $36 < S < 324$
b. $9 < S < 81$
c. $3 < S < 9$
d. $144 < S < 1296$
e. none of the above

ANSWER: b

35. Express the relationship $12 < C < 28$ in terms of *F*, if $F = \frac{9}{2}C + 11$.

a. $66 < F < 138$
b. $64 < F < 136$
c. $63 < F < 135$
d. $69 < F < 133$
e. $65 < F < 137$

ANSWER: e

Copyright Cengage Learning. Powered by Cognero.

College Algebra 13th edition Gustafson Test Bank

1.7 - Inequalities

36. Solve the inequality.

$$\frac{x-5}{x+7} \geq 0$$

a. $(-\infty, -7) \cup [5, \infty)$
b. $(-\infty, -7] \cup [5, \infty)$
c. $(-7, 5]$
d. $[5, \infty)$
e. $[-7, -5]$

ANSWER: a

37. Solve the inequality.

$$\frac{x-5}{x+7} \leq 0$$

a. $(-\infty, -7) \cup [5, \infty)$
b. $(-\infty, -7] \cup [5, \infty)$
c. $(-7, 5]$
d. $[5, \infty)$
e. $[-7, -5]$

ANSWER: c

38. Solve the inequality.

$$\frac{16}{x} > 2$$

a. $(0, 8]$
b. $(0, 8)$
c. $[0, 8]$
d. $(-\infty, 8)$
e. $[0, 8)$

ANSWER: b

39. Solve the inequality.

$$\frac{16}{x} \geq 2$$

a. $(0, 8]$
b. $(0, 8)$

Copyright Cengage Learning. Powered by Cognero.

College Algebra 13th edition Gustafson Test Bank

c. $[0, 8]$

d. $(-\infty, 8)$

e. $[0, 8)$

ANSWER: a

40. A long-distance telephone call costs 40¢ for the first three minutes and 10¢ for each additional minute. At most how many minutes can a person talk and not exceed $4?

a. 38 min

b. 39 min

c. 37 min

d. 40 min

ANSWER: b

41. The revenue R in dollars of producing and selling x Yankee candles is $R = 23x$ and the cost C is $C = 7x + 2{,}752$. At what production level will revenue exceed cost and the company obtain a profit?

a. $x > 174$

b. $x > 171$

c. $x > 172$

d. $x > 170$

ANSWER: c

Copyright Cengage Learning. Powered by Cognero.

College Algebra 13th edition Gustafson Test Bank

Name:_____ Class:_____ Date:_____

1.8 - Absolute Value

1. Write the expression $|2|$ without using absolute value symbols.

a. 0
b. 4
c. –2
d. 2
e. 3

ANSWER: d

2. Write the expression $|1-10|$ without using absolute value symbols.

a. –11
b. –9
c. 11
d. 0
e. 9

ANSWER: e

3. Write the expression without using absolute value symbols.

$|8|-|-4|$

a. 12
b. 18
c. 4
d. –4
e. –6

ANSWER: c

4. Write the expression without using absolute value symbols.

$|x-6|$ and $x>6$

a. $x+6$
b. $-6x$
c. $x-6$
d. $6x$
e. $6-x$

ANSWER: c

5. Find the sum of all solutions of the following equation.

$|2x+1|=3$

a. –1
b. 3

Copyright Cengage Learning. Powered by Cognero.

College Algebra 13th edition Gustafson Test Bank

c. 1
d. –3
e. –2

ANSWER: a

6. Solve the equation for x.

$$\left|\frac{3x-20}{2}\right| = 13$$

a. $x_1 = -\frac{46}{3}, x_2 = -2$

b. $x_1 = -\frac{46}{3}, x_2 = -\frac{2}{3}$

c. $x_1 = -\frac{47}{3}, x_2 = \frac{2}{3}$

d. $x_1 = \frac{46}{3}, x_2 = -2$

e. $x_1 = -\frac{46}{3}, x_2 = \frac{2}{3}$

ANSWER: d

7. Find the sum of all solutions of the following equation.

$$\left|\frac{4x-2}{x}\right| = 3$$

a. $\frac{86}{7}$

b. $-\frac{12}{7}$

c. 16

d. $\frac{16}{7}$

e. –16

ANSWER: d

8. Find the sum of all solutions of the following equation.

$$|x+8| = |8-x|$$

a. 8
b. –8
c. –1

Copyright Cengage Learning. Powered by Cognero.

College Algebra 13th edition Gustafson Test Bank

1.8 - Absolute Value

d. –11
e. 0

ANSWER: e

9. Solve the equation for x.

$|x-9|=|2x+9|$

a. 0, –18
b. 18
c. 0, 18
d. –18
e. 0

ANSWER: a

10. Find the sum of all solutions of the following equation.

$$\left|\frac{7x-1}{4}\right|=\left|\frac{4x+7}{7}\right|$$

a. 0
b. $\frac{2968}{2145}$
c. $\frac{1582}{2145}$
d. None of the above.

ANSWER: c

11. Solve the inequality. Express the solution set in interval notation.

$|x+4|>8$

a. $(4, 12)$
b. $(-\infty, -12)\cup(4, \infty)$
c. $(-\infty, 4)\cup(12, \infty)$
d. $(-\infty, -4)\cup(12, \infty)$
e. $(-12, -4)$

ANSWER: b

12. Solve the inequality. Express the solution set in interval notation.

$|5x-6|<11$

a. $(5, 17)$

Copyright Cengage Learning. Powered by Cognero.

College Algebra 13th edition Gustafson Test Bank

b. $(-1, \frac{5}{17})$

c. $(-1, \frac{17}{5})$

d. $(1, \frac{17}{5})$

e. $(-\infty, -\frac{17}{5}) \cup (-1, \infty)$

ANSWER: c

13. Solve the inequality. Express the solution set in interval notation.

$|2x-3|-9>6$

a. $(6, 9)$
b. $(-\infty, -7) \cup (10, \infty)$
c. $(-6, 9)$
d. $(-\infty, 6) \cup (9, \infty)$
e. $(-\infty, -6) \cup (9, \infty)$

ANSWER: e

14. Solve the inequality. Express the solution set in interval notation.

$7\left|\frac{7x-1}{2}\right| \geq 2$

a. $(-\infty, \frac{-3}{49}] \cup [\frac{11}{49}, \infty)$

b. $(-\infty, \frac{3}{49}] \cup [\frac{11}{49}, \infty)$

c. $(-\infty, -\frac{11}{49}] \cup [\frac{3}{49}, \infty)$

d. $(-\infty, -2) \cup (1, \infty)$

e. $[\frac{1}{7}, \infty)$

ANSWER: b

15. Solve the inequality. Express the solution set in interval notation.

$0<|6x+5|<11$

Copyright Cengage Learning. Powered by Cognero.

College Algebra 13th edition Gustafson Test Bank

1.8 - Absolute Value

a. $(-\frac{5}{6}, 1)$

b. $(-\infty, -\frac{5}{6}) \cup (1, \infty)$

c. $(-\frac{8}{3}, -\frac{5}{6})$

d. $(-\infty, -1) \cup (\frac{5}{6}, \infty)$

e. $(-\frac{8}{3}, -\frac{5}{6}) \cup (-\frac{5}{6}, 1)$

ANSWER: e

16. Solve the inequality. Express the solution set in interval notation.

$$4 < \left|\frac{x-15}{4}\right| < 7$$

a. $(-43, -31) \cup (1, 13)$

b. $(-13, 1) \cup (31, 43)$

c. $(-13, -1) \cup (31, 43)$

d. $(-1, 31)$

e. none of the above

ANSWER: c

17. Solve the inequality. Express the solution set in interval notation.

$$|6x+1| \le |6x-2|$$

a. $(-\infty, -\frac{1}{12}]$

b. $(-\infty, \frac{1}{12}]$

c. $(-\frac{1}{12}, \infty)$

d. $(-\infty, \frac{1}{6})$

e. $[\frac{1}{12}, \infty)$

ANSWER: b

18. Solve the inequality and express the solution using interval notation.

Copyright Cengage Learning. Powered by Cognero.

College Algebra 13th edition Gustafson Test Bank

Name:_____ Class:_____ Date:_____

1.8 - Absolute Value

$|x+36|<|x|$

a. $(-36, \infty)$
b. $(-18, \infty)$
c. $(-\infty, -18)$
d. $(-\infty, 18)$
e. $[-\infty, -18]$

ANSWER: c

19. The temperatures on a summer day satisfy the inequality below, where t is the temperature in degrees Fahrenheit. Express this range without using absolute value symbols.

$|t-75^\circ| \le 5^\circ$

a. $-70^\circ \le t \le 80^\circ$
b. $-80^\circ \le t \le -70^\circ$
c. $70^\circ \le t \le 80^\circ$
d. $-70^\circ < t < 80^\circ$
e. $80^\circ \le t$

ANSWER: c

20. A Steinway piano should be placed in an environment where the relative humidity h is between 40% and 72%. Express this range with an inequality containing an absolute value.

a. $|h+16\%| \le 56\%$
b. $|h-56\%| \le -16\%$
c. $|h-56\%| > 16\%$
d. $|h+16\%| < 56\%$
e. $|h-56\%| \le 16\%$

ANSWER: e

21. Solve the equation for x.

$$\left|\frac{x+1}{x-4}\right| = 4$$

a. $\frac{17}{3}, 5$
b. $\frac{17}{3}, 3$

Copyright Cengage Learning. Powered by Cognero.

College Algebra 13th edition Gustafson Test Bank

1.8 - Absolute Value

c. $\frac{17}{3}$, –3

d. 5 , $\frac{17}{5}$

e. 3 , $\frac{17}{5}$

ANSWER: b

22. Write the expression without using absolute value symbols.

$|x-11|$ and $x>11$

a. $x+11$
b. $-11x$
c. $x-11$
d. $11x$
e. $11-x$

ANSWER: c

23. Solve the inequality. Express the solution set in interval notation.

$|x+13|>15$

a. $(2, 28)$
b. $(-\infty, -28)\cup(2, \infty)$
c. $(-\infty, 2)\cup(28, \infty)$
d. $(-\infty, -2)\cup(28, \infty)$
e. $(-28, -2)$

ANSWER: b

24. Solve the inequality. Express the solution set in interval notation.

$|15x-4|<19$

a. $(15, 23)$
b. $(-1, \frac{15}{23})$
c. $(-1, \frac{23}{15})$
d. $(1, \frac{23}{15})$
e. $(-\infty, -\frac{23}{15})\cup(-1, \infty)$

ANSWER: c

Copyright Cengage Learning. Powered by Cognero.

College Algebra 13th edition Gustafson Test Bank

Name:_____ Class:_____ Date:_____

1.8 - Absolute Value

25. Solve the inequality. Express the solution set in interval notation.

$|2x-9|-3>14$

a. $(4, 13)$
b. $(-\infty, -5)\cup(14, \infty)$
c. $(-4, 13)$
d. $(-\infty, 4)\cup(13, \infty)$
e. $(-\infty, -4)\cup(13, \infty)$

ANSWER: e

26. Solve the inequality. Express the solution set in interval notation.

$9\left|\frac{9x-1}{2}\right|\geq 3$

a. $(-\infty, -\frac{3}{81}]\cup[\frac{15}{81}, \infty)$
b. $(-\infty, \frac{3}{81}]\cup[\frac{15}{81}, \infty)$
c. $(-\infty, -\frac{15}{81}]\cup[\frac{3}{81}, \infty)$
d. $(-\infty, -3)\cup(4, \infty)$
e. $[\frac{1}{9}, \infty)$

ANSWER: b

27. Solve the inequality. Express the solution set in interval notation.

$0<|10x+11|<21$

a. $(-\frac{11}{10}, 1)$
b. $(-\infty, -\frac{11}{10})\cup(1, \infty)$
c. $(-\frac{16}{5}, -\frac{11}{10})$
d. $(-\infty, -1)\cup(\frac{11}{10}, \infty)$
e. $(-\frac{16}{5}, -\frac{11}{10})\cup(-\frac{11}{10}, 1)$

Copyright Cengage Learning. Powered by Cognero.

College Algebra 13th edition Gustafson Test Bank

Name:_____ Class:_____ Date:_____

1.8 - Absolute Value

ANSWER: e

28. Solve the inequality. Express the solution set in interval notation.

$$11 < \left| \frac{x-32}{3} \right| < 15$$

a. $(-77, -65) \cup (1, 13)$

b. $(-13, 1) \cup (65, 77)$

c. $(-13, -1) \cup (65, 77)$

d. $(-1, 65)$

e. none of the above

ANSWER: c

29. The temperatures on a summer day satisfy the inequality below, where *t* is the temperature in degrees Fahrenheit. Express this range without using absolute value symbols.

$$|t - 80^\circ| \le 8^\circ$$

a. $[-72^\circ, 88^\circ]$

b. $[-88^\circ, -72^\circ]$

c. $[72^\circ, 88^\circ]$

d. $(-72^\circ, 88^\circ)$

e. $[88^\circ, \infty)$

ANSWER: c

30. A Steinway piano should be placed in an environment where the relative humidity *h* is between 42% and 72%. Express this range with an inequality containing an absolute value.

a. $|h + 15\%| \le 57\%$

b. $|h - 57\%| \le -15\%$

c. $|h - 57\%| > 15\%$

d. $|h + 15\%| < 57\%$

e. $|h - 57\%| \le 15\%$

ANSWER: e

31. Solve the inequality. Express the solution set in interval notation.

$$|8x + 2| \le |8x - 3|$$

a. $(-\infty, -\frac{1}{16}]$

Copyright Cengage Learning. Powered by Cognero.

College Algebra 13th edition Gustafson Test Bank

b. $(-\infty, \frac{1}{16}]$

c. $(-\frac{1}{16}, \infty)$

d. $(-\infty, \frac{1}{8})$

e. $[\frac{1}{16}, \infty)$

ANSWER: b

32. Solve the inequality. Express the solution set in interval notation.

$|8x-3| \leq |8x+2|$

a. $(-\infty, -\frac{1}{16}]$

b. $(-\infty, \frac{1}{16}]$

c. $(-\frac{1}{16}, \infty)$

d. $(-\infty, \frac{1}{8})$

e. $[\frac{1}{16}, \infty)$

ANSWER: e

Match each inequality with the corresponding solution set.

Choose the correct letter for each question.

a. $|x| < |x+38|$
b. $|x| > |x+38|$
c. $|x| < |x-38|$

33. $(-19, \infty)$
ANSWER: a

34. $(-\infty, -19)$
ANSWER: b

35. $(-\infty, 19)$
ANSWER: c

36. Solve the equation with one absolute value.

Copyright Cengage Learning. Powered by Cognero.

College Algebra 13th edition Gustafson Test Bank

1.8 - Absolute Value

$$\left|\frac{2x-8}{11}\right|+13=15$$

a. –7, 7
b. -15, 7
c. -15, 15
d. –7, 15

ANSWER: d

37. A light bulb is expected to last h hours, where $|h-1500| \le 200$. Express this range without using absolute value symbols.

a. $0 \le h \le 1700$
b. $1300 \le h \le 1700$
c. $-1300 \le h \le 1700$
d. $-1700 \le h \le -1300$

ANSWER: b

Copyright Cengage Learning. Powered by Cognero.

College Algebra 13th edition Gustafson Test Bank