Analysis and Design of Linear Circuits 9th edition Thomas Solutions Manual

SKU: 9781119596196-SOLUTIONS

2 Basic Circuit Analysis

2.1 Exercise Solutions

Exercise 2–1. A 6-V lantern battery powers a light bulb that draws 3 mA of current. What is the resistance of the lamp? How much power does the lantern use?

Using Ohm's law, we have $v = iR$ or $R = \frac{v}{i}$, so we can compute the resistance as $R = \frac{6\,\text{V}}{3\,\text{mA}} = 2\,\text{k}\Omega$. The power is $p = vi = (6\,\text{V})(3\,\text{mA}) = 18\,\text{mW}$.

Exercise 2–2. What is the maximum current that can flow through a $\frac{1}{8}$-W, 6.8-kΩ resistor? What is the maximum voltage that can be across it?

The resistor can dissipate up to 0.125 W of power. We have $p_{\text{MAX}} = i_{\text{MAX}}^2 R$, which we can solve for i_{MAX} and then substitute in values for the power and resistance

$$i_{\text{MAX}} = \sqrt{\frac{p_{\text{MAX}}}{R}} = \sqrt{\frac{0.125}{6800}} = 4.2875\,\text{mA}$$

Similarly, we can use $p_{\text{MAX}} = \frac{v_{\text{MAX}}^2}{R}$ to solve for the maximum voltage as follows:

$$v_{\text{MAX}} = \sqrt{R\,p_{\text{MAX}}} = \sqrt{(6800)(0.125)} = 29.155\,\text{V}$$

Exercise 2–3. A digital clock is a voltage that switches between two values at a constant rate that is used to time digital circuits. A particular clock switches between 0 V and 5 V every 10 μs. Sketch the clock's i-v characteristics for the times when the clock is at 0 V and at 5 V.

When the clock has a value of 0 V, its voltage is constant and zero for a wide range of currents. In this case, the i-v characteristic is a vertical line at 0 V. Likewise, when the clock has a value of 5 V, the voltage is constant at 5 V for a wide range of currents. In this case, the i-v characteristic is a vertical line at 5 V.

Exercise 2–4. Refer to Figure 2–12.

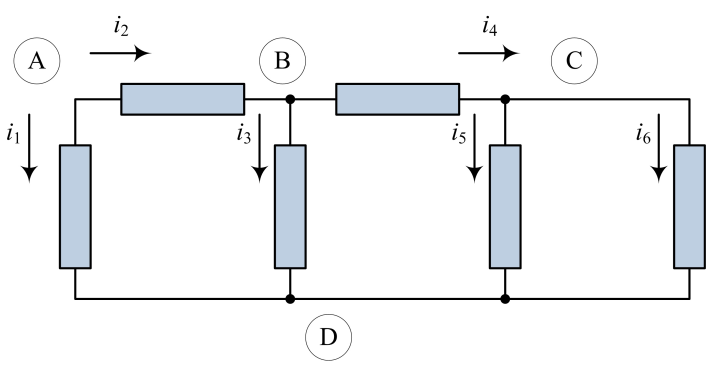

(a) Write KCL equations at nodes A, B, C, and D.

KCL states that the sum of the currents entering a node is zero at every instant. As we sum the currents at a node, if the current enters that node, it is positive and if the current leaves the node, it is negative. At node A, both currents i_1 and i_2 are leaving the node, so the equation is $-i_1 - i_2 = 0$. At node B, current i_2 enters the node and currents i_3 and i_4 leave the node, so we have $i_2 - i_3 - i_4 = 0$. At node C, current i_4 enters the node and currents i_5 and i_6 leave the node, so we have $i_4 - i_5 - i_6 = 0$. At node D, currents i_1, i_3, i_5, and i_6 enter the node, so we have $i_1 + i_3 + i_5 + i_6 = 0$.

(b) Given $i_1 = -1$ mA, $i_3 = 0.5$ mA, $i_6 = 0.2$ mA, find i_2, i_4, and i_5.

Applying the KCL equation for node A, we can find $i_2 = -i_1 = 1$ mA. Applying the KCL equation for node B, we have $i_4 = i_2 - i_3 = 1 - 0.5 = 0.5$ mA. Finally, applying the KCL equation for node C, we have $i_5 = i_4 - i_6 = 0.5 - 0.2 = 0.3$ mA.

Analysis and Design of Linear Circuits 9th edition Thomas Solutions Manual

(c) Identify which equation is redundant.

The equation at node D is redundant to those at nodes A, B, and C. If we sum the equations for nodes A, B, and C together and multiply the result by -1, we can generate the equation for node D.

Exercise 2–5. Find the voltages v_x and v_y in Figure 2–14.

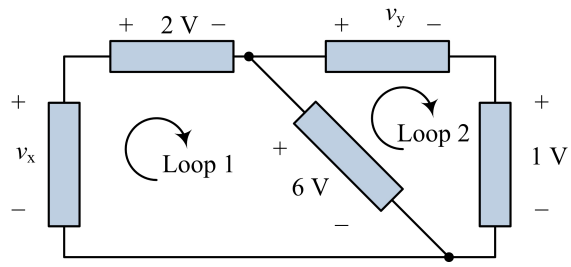

To find v_x, write the KVL equation around Loop 1 as $-v_x + 2 + 6 = 0$ and solve for $v_x = +8$ V. To find v_y, write the KVL equation around Loop 2 as $v_y + 1 - 6 = 0$ and solve for $v_y = +5$ V.

Exercise 2–6. Find the voltages v_x, v_y, and v_z in Figure 2–15.

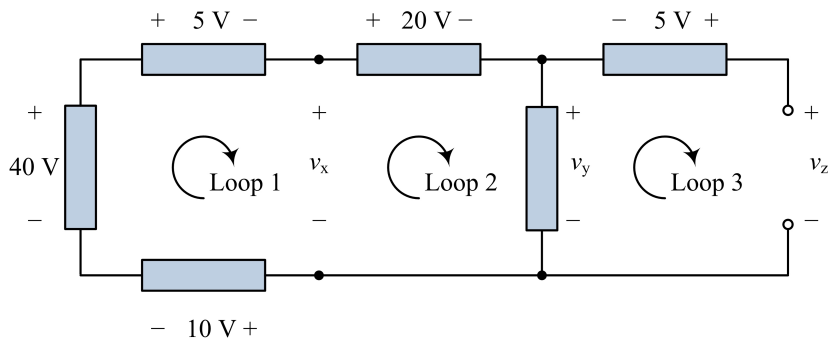

In Figure 2–15, some of the unknown voltages do not appear across elements, but we can still write KVL equations. For Loop 1 starting with the lowest element, the KVL equation is $10 - 40 + 5 + v_x = 0$, which can be solved to yield $v_x = 25$ V. For Loop 2, the KVL equation is $-v_x + 20 + v_y = 0$, which can be solved for $v_y = 25 - 20 = 5$ V. Finally, for Loop 3, the KVL equation is $-v_y - 5 + v_z = 0$, which yields $v_z = 5 + 5 = 10$ V.

Exercise 2–7. Identify the elements connected in series or parallel when a short circuit is connected between nodes A and B in each of the circuits in Figure 2–18. The modified circuits are shown below.

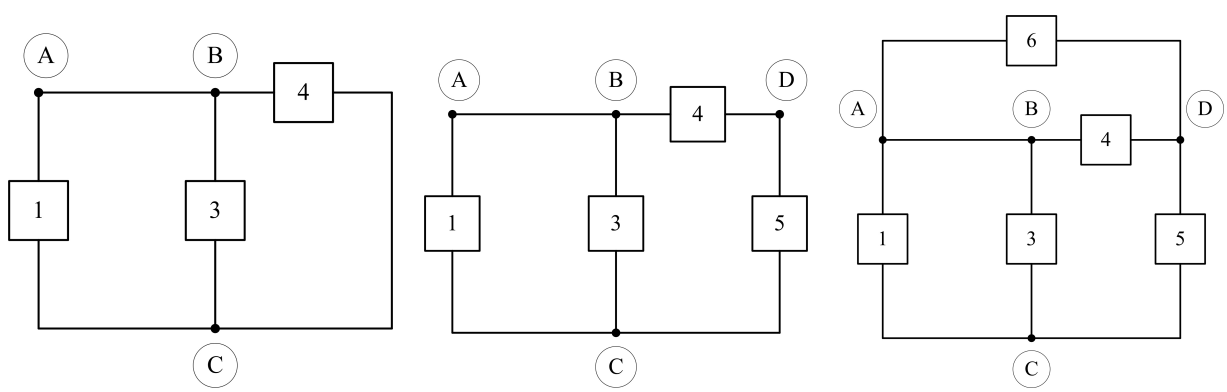

Analysis and Design of Linear Circuits 9th edition Thomas Solutions Manual

In the solution, the short circuit has been applied in each of the circuits and Element 2 has been shorted out of the circuit. For the circuit in Figure 2–18(a), all of the elements share the same two nodes, A and C, so Elements 1, 2, and 3 are in parallel. For the circuit in Figure 2–18(b), Elements 1 and 3 share nodes A and C, so they are in parallel. In addition, Elements 4 and 5 are the only elements connected to node D, so they are in series. For the circuit in Figure 2–18(c), Elements 1 and 3 are in parallel because they share nodes A and C. In addition, Elements 4 and 6 are in parallel, because they share nodes A and D.

Exercise 2–8. Identify the elements in Figure 2–19 that are connected in (a) parallel, (b) series, or (c) neither.

Refer to the figure in the textbook.

(a) Elements 1, 8, and 11 share the upper left node and ground, so they are in parallel. In addition, Elements 3, 4, and 5 share the center node and ground, so they are in parallel.

(b) Elements 9 and 10 are in series, because they share a single node and no other elements with current connect to that node. Likewise, Elements 6 and 7 share a single node with no other elements, so they are also in series.

(c) The remaining element, Element 2, is neither in series nor in parallel with any other elements.

Exercise 2–9. A 1-kΩ resistor R_R is inserted between nodes A and B in Figure 2–20(a) as shown in Figure 2–20(b).

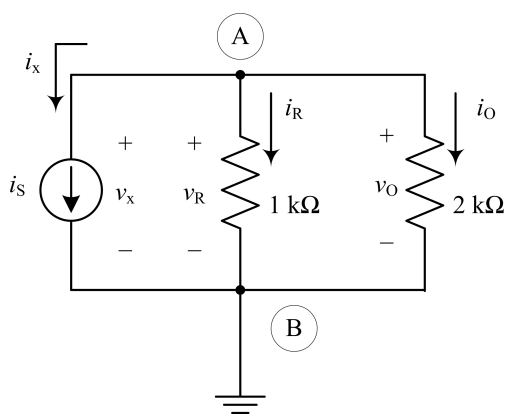

The voltage across it is labeled v_R and the current through it is labeled i_R. Write a set of element and connection constraints defining the circuit. Then find i_x, v_x, i_O, i_R, v_R, and v_O if $i_S = 1$ mA and $R = 2$ kΩ.

The resulting circuit is shown earlier. Note that the 1-kΩ resistor has been inserted and the current through it labeled as i_R and the voltage across it labeled as v_R. The element constraint for the current source is $i_S = i_x = 1$ mA. The element constraints for the resistors are $v_R = i_R R_R = 1000\, i_R$ and $v_O = i_O R = 2000\, i_O$. Writing KCL at the top node, we have $-i_S - i_R - i_O = 0$. Writing KVL around the left loop yields $-v_x + v_R = 0$. Writing KVL around the right loop yields $-v_R + v_O = 0$. Alternately, we can see that the three elements all share the top and bottom nodes, so they are all in parallel and have the same voltage, $v_x = v_R = v_O$. Using these equations we can solve for the unknown values

Analysis and Design of Linear Circuits 9th edition Thomas Solutions Manual

as follows:

$$
\begin{aligned}
i_x &= i_S = 1\,\text{mA} \\
v_R &= v_O \\
R_R i_R &= R_O i_O \\
1000 i_R &= 2000 i_O \\
i_R &= 2 i_O \\
i_x + i_R + i_O &= 0 \\
i_R + i_O &= -i_x = -1\,\text{mA} \\
2 i_O + i_O &= -1\,\text{mA} \\
3 i_O &= -1\,\text{mA} \\
i_O &= -333\,\mu\text{A} \\
v_x &= v_R = v_O = (2\,\text{k}\Omega)(-333\,\mu\text{A}) = -667\text{mV} \\
i_R &= 2 i_O = = -667\,\mu\text{A}
\end{aligned}
$$

Exercise 2–10. The wire connecting R_1 to node B in Figure 2-21 is broken. What would you measure for i_A, v_1, i_2, and v_2? Is KVL violated? Where does the source voltage appear across?

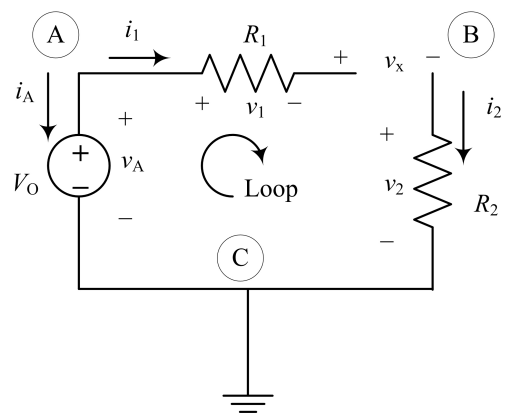

The resulting circuit is shown above. If the circuit is broken between R_1 and node B, then no current can flow in the circuit and all currents are zero, $i_A = i_1 = i_2 = 0$. Using Ohm's law, $v = Ri$, for the voltages across the resistors, the current is zero, so the voltages must also be zero and we have $v_1 = v_2 = 0$. Note that a new voltage, v_x, has been labeled across the gap where the circuit is broken. We can now write KVL as $-v_A + v_1 + v_x + v_2 = 0$. With $v_1 = v_2 = 0$, we get $v_x = v_A = V_O$. KVL is not violated because the voltage from the source now appears across the gap in the open (broken) circuit.

Analysis and Design of Linear Circuits 9th edition Thomas Solutions Manual

Exercise 2–11. Repeat the problem of Example 2-10 if the 30-V voltage source is replaced with a 2-mA current source with the arrow pointed up toward node A.

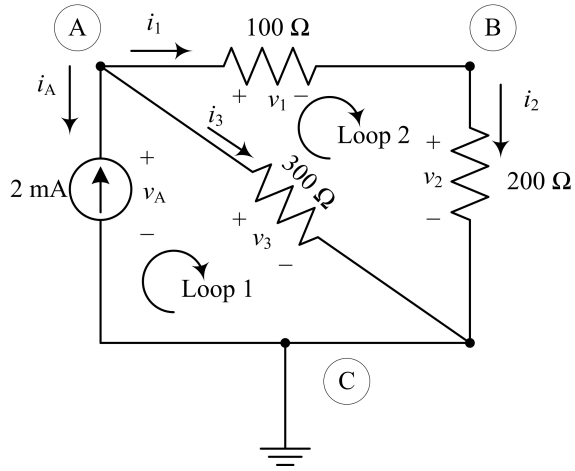

The resulting circuit is shown above. The description of the circuit requires four element equations and four connection equations. The element equations are

$$\begin{aligned} v_1 &= 100 i_1 \\ v_2 &= 200 i_2 \\ v_3 &= 300 i_3 \\ i_A &= -2\,\text{mA} \end{aligned}$$

The four connection equations are

KCL : Node A	$-i_A - i_1 - i_3 = 0$
KCL : Node B	$i_1 - i_2 = 0$
KVL : Loop 1	$-v_A + v_3 = 0$
KVL : Loop 2	$-v_3 + v_1 + v_2 = 0$

The KCL equation at node B implies $i_1 = i_2$. We can then start with the KVL equation around loop 2 and solve as follows:

$$\begin{aligned} -v_3 + v_1 + v_2 &= 0 \\ v_1 + v_2 &= v_3 \\ 100 i_1 + 200 i_2 &= 300 i_3 \\ 100 i_1 + 200 i_1 &= 300 i_3 \\ 300 i_1 &= 300 i_3 \\ i_1 &= i_3 \end{aligned}$$

Analysis and Design of Linear Circuits 9th edition Thomas Solutions Manual

Now using the KCL equation at node A, we have

$$\begin{aligned} -i_A - i_1 - i_3 &= 0 \\ i_1 + i_3 &= -i_A = 2\,\text{mA} \\ i_1 + i_1 &= 2\,\text{mA} \\ 2i_1 &= 2\,\text{mA} \\ i_1 &= i_3 = i_2 = 1\,\text{mA} \end{aligned}$$

Now apply Ohm's law to solve for the voltages

$$\begin{aligned} v_1 &= 100i_1 = 100\,\text{mV} \\ v_2 &= 200i_2 = 200\,\text{mV} \\ v_3 &= 300i_3 = 300\,\text{mV} \end{aligned}$$

Exercise 2–12. In Figure 2–24 write a loop equation around Loop 1 and a node equation at Node A. Then if $i_1 = 200$ mA and $i_3 = -100$ mA, use the appropriate element equations to find the voltages v_x and v_y.

Write the KVL equation around Loop 1 as $-v_x + v_1 + v_2 = 0$. The KCL equation at Node A is $i_1 - i_2 - i_3 = 0$. Solving for i_2 and substituting in the given values, we have $i_2 = i_1 - i_3 = 200 + 100 = 300$ mA. Apply Ohm's law to solve for $v_1 = 100i_1 = (100\,\Omega)(200\,\text{mA}) = 20$ V, and $v_2 = 50i_2 = (50\,\Omega)(300\,\text{mA}) = 15$ V. Solve for $v_x = v_1 + v_2 = 20 + 15 = 35$ V. Write a KVL equation around the right loop as $-v_2 + v_3 + v_y = 0$. Apply Ohm's law to find $v_3 = 200i_3 = (200\,\Omega)(-100\,\text{mA}) = -20$ V. Solve for v_y as $v_y = v_2 - v_3 = 15 + 20 = 35$ V.

Analysis and Design of Linear Circuits 9th edition Thomas Solutions Manual

Exercise 2–13. In Figure 2–25(a), the 2-A source is replaced by a 100-V source with the + terminal at the top, and the 3-A source is removed. Find the current and its direction through the voltage source.

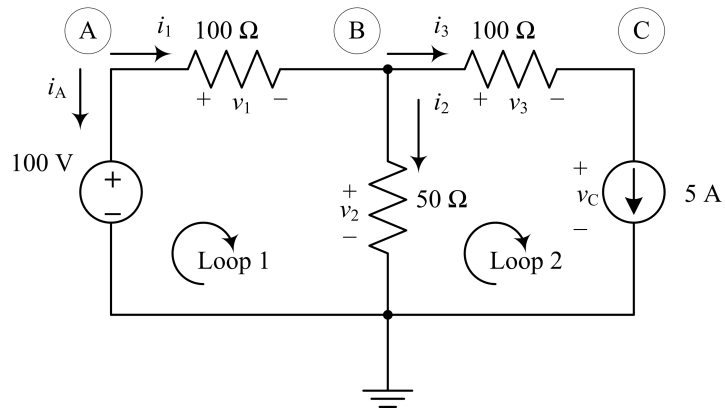

The resulting circuit is shown above. Writing KCL at node C, we have $i_3 - 5 = 0$, which yields $i_3 = 5$ A. Write the KCL equation at node B to get $i_1 - i_2 - i_3 = 0$, which can be solved for $i_1 = i_2 + i_3 = i_2 + 5$. Write the KVL equation around loop 1 to get $-100 + v_1 + v_2 = 0$, which yields the following

$$\begin{aligned}
v_1 + v_2 &= 100 \\
100i_1 + 50i_2 &= 100 \\
100(i_2 + 5) + 50i_2 &= 100 \\
100i_2 + 500 + 50i_2 &= 100 \\
150i_2 &= -400 \\
i_2 &= -2.667 \text{ A}
\end{aligned}$$

We can then solve for $i_1 = i_2 + 5 = 2.333$ A and $i_A = -i_1 = -2.333$ A. Since i_A is negative, the current follows in the opposite direction through the voltage source, which is up, and has a magnitude of 2.333 A.

Analysis and Design of Linear Circuits 9th edition Thomas Solutions Manual

Exercise 2–14. Find the equivalent resistance for the circuit in Figure 2–29.

Redraw the original circuit to an equivalent circuit without the diagonal resistor. Starting from the right side, combine resistors in series or parallel as appropriate to reduce the circuit to a single resistor. The following sequence of circuits shows the progress in reducing the circuit.

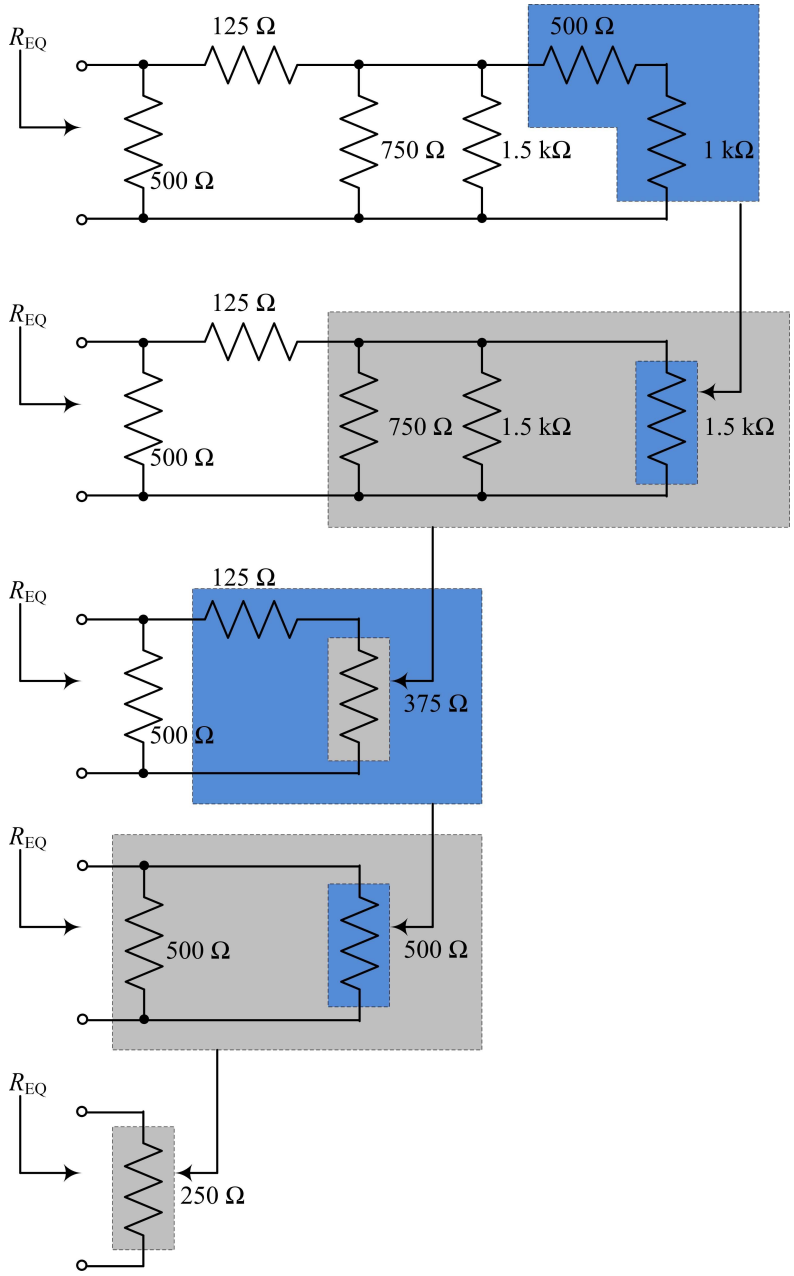

Starting at the far right, combine the 500-Ω and 1-kΩ resistors in series to get a 1.5-kΩ resistor. Next, combine the two 1.5-kΩ resistors and the 750-Ω resistor in parallel to get a 375-Ω resistor. Combine the 125-Ω resistor in series with the 375-Ω resistor to get a 500-Ω resistor. Combine the two 500-Ω resistors in parallel to get the final equivalent resistance of 250 Ω.

Analysis and Design of Linear Circuits 9th edition Thomas Solutions Manual

Exercise 2–15. Find the equivalent resistance between terminals A–C, B–D, A–D, and B–C in the circuit in Figure 2–30.

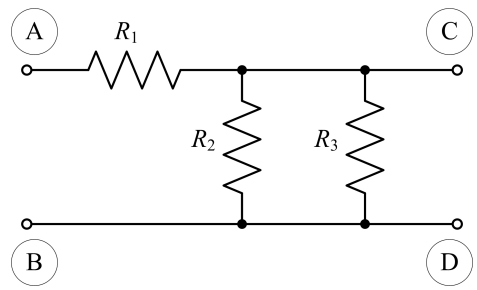

If current flows only between terminals A and C, then no current flows through terminals B and D and resistors R_2 and R_3 are not active in the circuit. The equivalent resistance $R_{A-C} = R_1$. If current flows only between terminals B and D, then no current flows through terminals A and C and none of the resistors are active in the circuit. The equivalent resistance $R_{B-D} = 0$. If current flows between terminals A and D, resistors R_2 and R_3 are in parallel and that combination is in series with R_1. The equivalent resistance $R_{A-D} = R_1 + R_2 \parallel R_3 = R_1 + \frac{R_2 R_3}{R_2+R_3}$. If current flows between terminals B and C, then no current flows through R_1 and it is not part of the circuit. The equivalent resistance is the parallel combination of R_2 and R_3 or $R_{B-C} = R_2 \parallel R_3 = \frac{R_2 R_3}{R_2+R_3}$.

Exercise 2–16. Find the equivalent resistance between terminals A–B, A–C, A–D, B–C, B–D, and C–D in the circuit of Figure 2-31. For example: $R_{A-B} = (80 \parallel 80) + 60 = 100\,\Omega$.

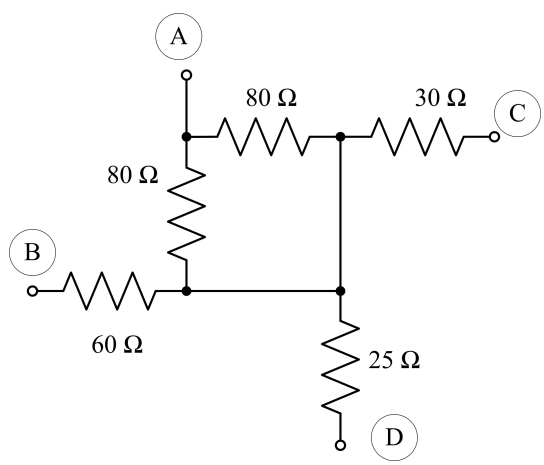

If current flows between terminals A and C, then no current flows through the 60-Ω and the 25-Ω resistors and they are not part of the circuit. The two 80-Ω resistors are in parallel and that combination is in series with the 30-Ω resistor, so we have $R_{A-C} = (80 \parallel 80) + 30 = 70\,\Omega$. If current flows between terminals A and D, then no current flows through the 60-Ω and the 30-Ω resistors and they are not part of the circuit. Again, the two 80-Ω resistors are in parallel and that combination is in series with the 25-Ω resistor, so we have $R_{A-D} = (80 \parallel 80) + 25 = 65\,\Omega$. If current flows between terminals B and C, then no current flows through the 25-Ω resistor and it is not part of the circuit. In addition, in the remaining circuit, the two 80-Ω resistors are shorted out. The resulting circuit is a series combination of the 60-Ω and 30-Ω resistors, which yields $R_{B-C} = 60 + 30 = 90\,\Omega$. If current flows between terminals B and D, then no current flows through the 30-Ω resistor and it is not part of the circuit. In addition, in the remaining circuit, the two 80-Ω resistors are again shorted out. The resulting circuit is a series combination of the 60-Ω and 25-Ω resistors, which yields $R_{B-D} = 60 + 25 = 85\,\Omega$. Finally, with current flowing between terminals C and D, the 60-Ω resistor is not part of the circuit and the two 80-Ω resistors are shorted out. The equivalent resistance is the series combination of the 30-Ω and 25-Ω resistors, which yields $R_{C-D} = 25 + 30 = 55\,\Omega$.

Analysis and Design of Linear Circuits 9th edition Thomas Solutions Manual

Exercise 2–17. A practical current source consists of a 2-mA ideal current source in parallel with a 500-Ω resistance. (a) Find the equivalent practical voltage source. (b) Connect a 1-kΩ resistor in parallel with the first and find the power delivered by the current source. (c) Find the power delivered by the equivalent voltage source. Why is there a difference in the source powers?

(a) The equivalent practical voltage source will have the same 500-Ω resistance. To transform the current source into a voltage source, we compute $v_S = i_S R = (2\,\text{mA})(500\,\Omega) = 1$ V. The equivalent practical voltage source is therefore a 1-V ideal voltage source in series with a 500-Ω resistor.

(b) The ideal current source experiences an equivalent resistance of $500 \parallel 1000 = (500)(1000)/(500 + 1000) = 333\,\Omega$. The voltage across the current source is $v_S = i_S R_{EQ} = (2\,\text{mA})(333\,\Omega) = 666$ mV. The power supplied by the current source is $p_S = i_S v_S = (2\,\text{mA})(666\,\text{mV}) = 1.33$ mW.

(c) The ideal voltage source experiences an equivalent resistance for $500 + 1000 = 1500\,\Omega$. The current supplied by the voltage sources is $i_S = v_S/R = 1\,\text{V}/1500\,\Omega = 667\,\mu\text{A}$. The power supplied by the voltage source is $p_S = i_S v_S = (667\,\mu\text{A})(1\,\text{V}) = 667\,\mu\text{W}$. The sources provide different powers because equivalent circuits are only guaranteed to provide the same voltage, current, and power to the load, which is the 1-kΩ resistor in this case. The equivalent circuits may have different internal characteristics.

Exercise 2–18. Find the equivalent circuit for each of the following

(a) Three ideal 1.5-V batteries connected in series.

For voltage sources connected in series, the voltages add. Assuming all three sources are oriented in the same direction, the equivalent voltage is $1.5 + 1.5 + 1.5 = 4.5$ V.

(b) A 5-mA current source in series with a 100-kΩ resistor.

A current source in series with a resistor acts as a current source without the resistor, so the equivalent circuit is a single 5-mA current source.

(c) A 40-A ideal current source in parallel with an ideal 10-A current source.

For ideal current sources in parallel, the currents add, so the equivalent circuit is a 50-A current source.

(d) A 100-V source in parallel with two 10-kΩ resistors.

A voltage source in parallel with any resistance acts like a voltage source, so the equivalent circuits is a single 100-V voltage source.

(e) An ideal 15-V source in series with an ideal 10-mA source.

This is not a valid combination of sources and the two cannot be combined in a theoretical perspective.

(f) A 15-V ideal source and a 5-V ideal source connected in parallel.

This is not a valid combination of voltage sources, since a parallel combination of elements must have the same voltage.

Analysis and Design of Linear Circuits 9th edition Thomas Solutions Manual

Exercise 2–19. Find the voltages v_x, v_y, and v_z in the circuit of Figure 2–39. Show that the sum of all the voltages across each of the individual resistors equals the source voltage.

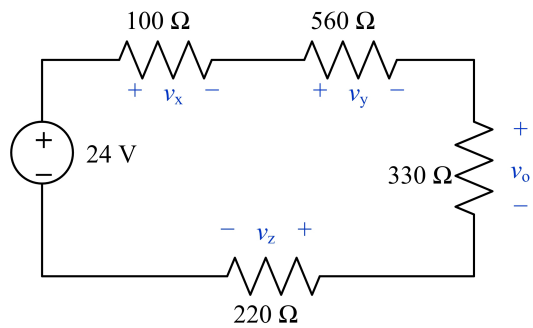

For each resistor, use voltage division to find its corresponding voltage.

$$v_x = \left(\frac{100}{100+560+330+220}\right)24 = 1.9835\,V$$

$$v_y = \left(\frac{560}{100+560+330+220}\right)24 = 11.1074\,V$$

$$v_O = \left(\frac{330}{100+560+330+220}\right)24 = 6.5455\,V$$

$$v_z = \left(\frac{220}{100+560+330+220}\right)24 = 4.3636\,V$$

Sum the voltages to get $1.9835 + 11.107 + 6.5455 + 4.3636 = 24$ V, which matches the source voltage.

Exercise 2–20. Using only the available 10% tolerance resistors in the inside back cover, design a voltage divider to obtain 6.5 V ±20% from a 20-V source using only two resistors.

There are many valid designs to solve this problem. With only two resistors, we want one to have 6.5 V across it, which implies the other will have 13.5 V across it. The voltages have a ratio of approximately 1:2, so we want the resistors to have a similar ratio. We can calculate the exact ratio using the voltage divider equation as follows:

$$v_O = \frac{R_O}{R_S + R_O} v_{TOTAL}$$

$$6.5 = \frac{R_O}{R_S + R_O}(20)$$

$$\frac{R_O}{R_S + R_O} = 0.325$$

$$R_O - 0.325 R_O = 0.325 R_S$$

$$R_O = 0.481 R_S$$

Reviewing all of the resistor options in the table, the best match is $R_O = 2.7\,\text{k}\Omega$ and $R_S = 5.6\,\text{k}\Omega$, which have a ratio of 0.482. With these resistor choices, the output voltage is calculated as follows:

$$v_O = \frac{R_O}{R_S + R_O} v_{TOTAL} = \frac{2.7}{5.6 + 2.7}(20) = 6.506\,\text{V}$$

If the resistors approach the limits of their tolerances, the output voltage could vary between 5.66 V and 7.42 V, which is within the 20% tolerance for the output voltage of 6.5 V, or between 5.2 V and 7.8 V. Other good resistor options

Analysis and Design of Linear Circuits 9th edition Thomas Solutions Manual

include $R_O = 3.3\,\text{k}\Omega$ and $R_S = 6.8\,\text{k}\Omega$, which have a ratio of 0.485, or $R_O = 3.9\,\text{k}\Omega$ and $R_S = 8.2\,\text{k}\Omega$, which have a ratio of 0.476.

Exercise 2–21. In Figure 2-40, $R_x = 10\,\text{k}\Omega$. The output voltage $v_O = 20$ V. Find the voltage source that would produce that output. (*Hint:* It is not 10 V.)

The modified circuit is shown below.

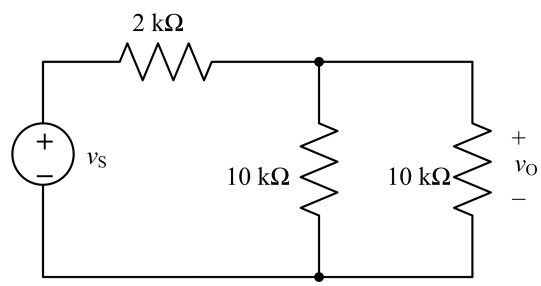

Combine the two 10-kΩ resistors in parallel to get a single 5-kΩ resistor in series with the 2-kΩ resistor. The 5-kΩ resistor still has 20 V across it. Use the voltage division equation to solve for the voltage of the source as follows:

$$20 = \left(\frac{5000}{5000+2000}\right) v_s$$

$$v_s = \left(\frac{5000+2000}{5000}\right) 20 = 28\text{ V}$$

Exercise 2–22. In Figure 2–41, suppose that a resistor R_4 is connected across the output. What value should R_4 be if we want $\frac{1}{2}v_S$ to appear between node A and ground?

Using the concept of voltage division, for one-half of v_S to appear between node A and ground, the resistance between node A and ground will have to match R_1 so that the source voltage divides equally between the two parts of the circuit. The equivalent resistance between node A and ground is the series combination of R_3 and R_4 in parallel with R_2 or $R_{EQ} = R_2 \parallel (R_3 + R_4)$. Setting $R_{EQ} = R_1$ we can solve for R_4 as follows:

$$R_1 = R_2 \parallel (R_3 + R_4) = \frac{R_2(R_3+R_4)}{R_2+R_3+R_4} = \frac{R_2R_3 + R_2R_4}{R_2+R_3+R_4}$$

$$R_1(R_2+R_3+R_4) = R_2R_3 + R_2R_4$$

$$R_1R_4 - R_2R_4 = R_2R_3 - R_1R_2 - R_1R_3$$

$$R_4(R_1 - R_2) = R_2R_3 - R_1R_2 - R_1R_3$$

$$R_4 = \frac{R_2R_3 - R_1R_2 - R_1R_3}{R_1 - R_2} = \frac{R_1R_3 + R_1R_2 - R_3R_2}{R_2 - R_1}$$

Exercise 2–23. Ten volts (v_s) are connected across the 10-kΩ potentiometer (R_{TOTAL}) shown in Figure 2–42(c). A load resistor of 10 kΩ is connected across its output. At what resistance should the wiper ($R_{TOTAL} - R_1$) be set so that 2 V appears at the output, v_O?

To solve this problem, first define $R_2 = R_{TOTAL} - R_1$, which is the resistance we want to find. For a 10-kΩ potentiometer, $R_1 + R_2 = 10\,\text{k}\Omega$, so $R_1 = 10\,\text{k}\Omega - R_2$. The equivalent resistance of the output is $R_{EQ} = R_2 \parallel 10\,\text{k}\Omega$.

Analysis and Design of Linear Circuits 9th edition Thomas Solutions Manual

Now use the voltage division equation and the specified source and output voltages to solve for R_2 as follows:

$$2 = \left(\frac{R_{EQ}}{R_1 + R_{EQ}}\right)10 = \left[\frac{\dfrac{10^4 R_2}{10^4 + R_2}}{10^4 - R_2 + \left(\dfrac{10^4 R_2}{10^4 + R_2}\right)}\right]10$$

$$2\left[10^4 - R_2 + \left(\frac{10^4 R_2}{10^4 + R_2}\right)\right] = \left(\frac{10^4 R_2}{10^4 + R_2}\right)10$$

$$(10^4 - R_2)(10^4 + R_2) + 10^4 R_2 = (10^4 R_2)(5)$$

$$-R_2^2 + 10^8 + 10^4 R_2 = (5 \times 10^4)R_2$$

$$R_2^2 + (4 \times 10^4)R_2 - 10^8 = 0$$

Solving for the positive root of the quadratic equation, we get $R_2 = 2.36\,\text{k}\Omega$. The other root is negative, so it is not a valid solution for a resistance.

Exercise 2–24. For the circuit shown in Figure 2–43, find the values of the output v_O as the potentiometer is moved across its range. Then determine the value of v_O if the potentiometer is set to exactly halfway of its range.

If the wiper is set at the top of the 5-kΩ resistor, then the full voltage of the source appears across the output, which is 15 V. If the wiper is set at the bottom of the 5-kΩ resistor, there is no voltage drop across the output resistor and the output voltage is 0 V. The output voltage range is therefore $0\,\text{V} \le v_O \le 15\,\text{V}$.

If the wiper is set at its halfway point, then there is a 2.5-kΩ resistor above the wiper and a 2.5-kΩ wiper in parallel with the 5-kΩ resistor. The equivalent circuit is shown below.

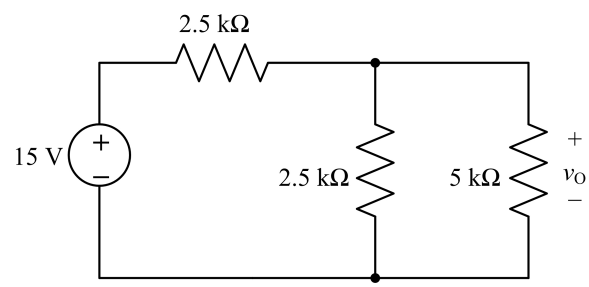

Combine the 2.5-kΩ and 5-kΩ resistors in parallel to get an equivalent resistance of $R_{EQ} = (2.5)(5)/(2.5 + 5) = 1.667\,\text{k}\Omega$. Apply voltage division to find the output voltage as follows:

$$v_O = \frac{R_{EQ}}{2.5 + R_{EQ}}(15) = = \frac{1.667}{2.5 + 1.667}(15) = 6.0\,\text{V}$$

Analysis and Design of Linear Circuits 9th edition Thomas Solutions Manual

Exercise 2–25.

(a) Find i_y and i_z in the circuit of Figure 2–47(a).

Use current division to find all of the currents. Note that i_z flows through an equivalent resistance of 10 Ω.

$$i_x = \left(\frac{\frac{1}{20}}{\frac{1}{20}+\frac{1}{20}+\frac{1}{10}}\right)5 = 1.25\text{ A}$$

$$i_y = \left(\frac{\frac{1}{20}}{\frac{1}{20}+\frac{1}{20}+\frac{1}{10}}\right)5 = 1.25\text{ A}$$

$$i_z = \left(\frac{\frac{1}{10}}{\frac{1}{20}+\frac{1}{20}+\frac{1}{10}}\right)5 = 2.5\text{ A}$$

(b) Show that the sum of i_x, i_y, and i_z equals the source current.

Sum the currents found in part (a), $i_x + i_y + i_z = 1.25 + 1.25 + 2.5 = 5$ A.

Exercise 2–26. The circuit in Figure 2–48 shows a delicate device that is modeled by a 90-Ω equivalent resistance. The device requires a current of 1 mA to operate properly. A 1.5-mA fuse is inserted in series with the device to protect it from overheating. The resistance of the fuse is 10 Ω. Without the shunt resistance R_x, the source would deliver 5 mA to the device, causing the fuse to blow. Inserting a shunt resistor R_x diverts a portion of the available source current around the fuse and device. Select a value of R_x so only 1 mA is delivered to the device.

The equivalent resistance of the device and its fuse is 100 Ω. Write the current division equation such that the current through the device is 1 mA and then solve for the shunt resistance R_x.

$$1 = \left(\frac{\frac{1}{100}}{\frac{1}{100}+\frac{1}{R_x}+\frac{1}{100}}\right)10 = \left(\frac{R_x}{R_x+100+R_x}\right)10 = \left(\frac{R_x}{2R_x+100}\right)10$$

$$2R_x + 100 = 10R_x$$

$$8R_x = 100$$

$$R_x = 12.5\,\Omega$$

Exercise 2–27. Repeat the problem of Example 2–23 if the battery's internal resistance increases to 70 mΩ. Will there be sufficient current available to start the car?

Perform a source transformation with the 12.6-V battery and the 70-mΩ resistor. The resulting current source has a value of 180 A, so it cannot supply 210.1 A to the starter and accessories. Using the second approach described in Example 2–23, the current through the source resistance is 210.1 A and the resistance is 70 mΩ. The voltage drop across the source resistance is (210.1)(0.070) = 14.707 V. This voltage is greater than the battery rating, so there will not be sufficient current to start the car.

Exercise 2–28.

(a) Find the currents i_S, i_1, i_2, and i_3 in the R-$2R$ circuit shown in Figure 2–51

In the figure, let node 1 be the node from which current i_1 exits. Label nodes 2 and 3 similarly with respect to currents i_2 and i_3. Find the equivalent resistance in the circuit, working from right to left. The equivalent resistance to the right of node 3 is $100\,\Omega \parallel 100\,\Omega = 50\,\Omega$. The equivalent resistance to the right of node

Analysis and Design of Linear Circuits 9th edition Thomas Solutions Manual

2 is $100\,\Omega \parallel (50\,\Omega + 50\,\Omega) = 100\,\Omega \parallel 100\,\Omega = 50\,\Omega$. Similarly, the equivalent resistance to the right of node 1 is $100\,\Omega \parallel (50\,\Omega + 50\,\Omega) = 100\,\Omega \parallel 100\,\Omega = 50\,\Omega$. The equivalent resistance seen by the source is $100\,\Omega + 50\,\Omega = 150\,\Omega$. The current at the source is $i_S = (5\text{ V})/(150\,\Omega) = 33.3\text{ mA}$.

At node 1, the current entering from the left splits into two paths, each with an equivalent resistance of $100\,\Omega$. Therefore, the current splits equally and $i_1 = i_S/2 = 16.7\text{ mA}$. We have the same situation at nodes 2 and 3, so $i_2 = i_1/2 = 8.33\text{ mA}$ and $i_3 = i_2/2 = 4.17\text{ mA}$.

(b) If $i_S = i_{REF}$ as noted in Example 2-24, are the found currents proportional as expected?

The currents are proportional as expected, with $i_1 = i_{REF}/2$, $i_2 = i_{REF}/4$, and $i_3 = i_{REF}/8$,

Exercise 2–29. In Figure 2–53, $R = 15\text{ k}\Omega$. The voltage source $v_S = 5\text{ V}$. Find the power delivered to the circuit by the source.

We can apply the analysis completed in Example 2–25 to solve for the source current

$$i_S = \frac{3}{5}\frac{v_S}{R} = \frac{3}{5}\frac{5\text{ V}}{15\times 10^3\,\Omega} = 200\,\mu\text{A}$$

We can now solve for the source power $p_s = v_S i_S = (5\text{ V})(200\times 10^{-6}\text{ A}) = 1\text{ mW}$.

Exercise 2–30. In Figure 2–54(a), find the current through the $2R$ resistor.

Using Figure 2–54(b) and current division, we can solve for i_{2R} directly as follows:

$$i_{2R} = \left(\frac{\frac{1}{2R}}{\frac{1}{R}+\frac{1}{2R}+\frac{1}{R}}\right)\frac{v_S}{R} = \frac{1}{2+1+2}\frac{v_S}{R} = \frac{v_S}{5R}\text{ A}$$

Analysis and Design of Linear Circuits 9th edition Thomas Solutions Manual

Exercise 2–31. Find v_x and i_x using circuit reduction on the circuit in Figure 2–56.

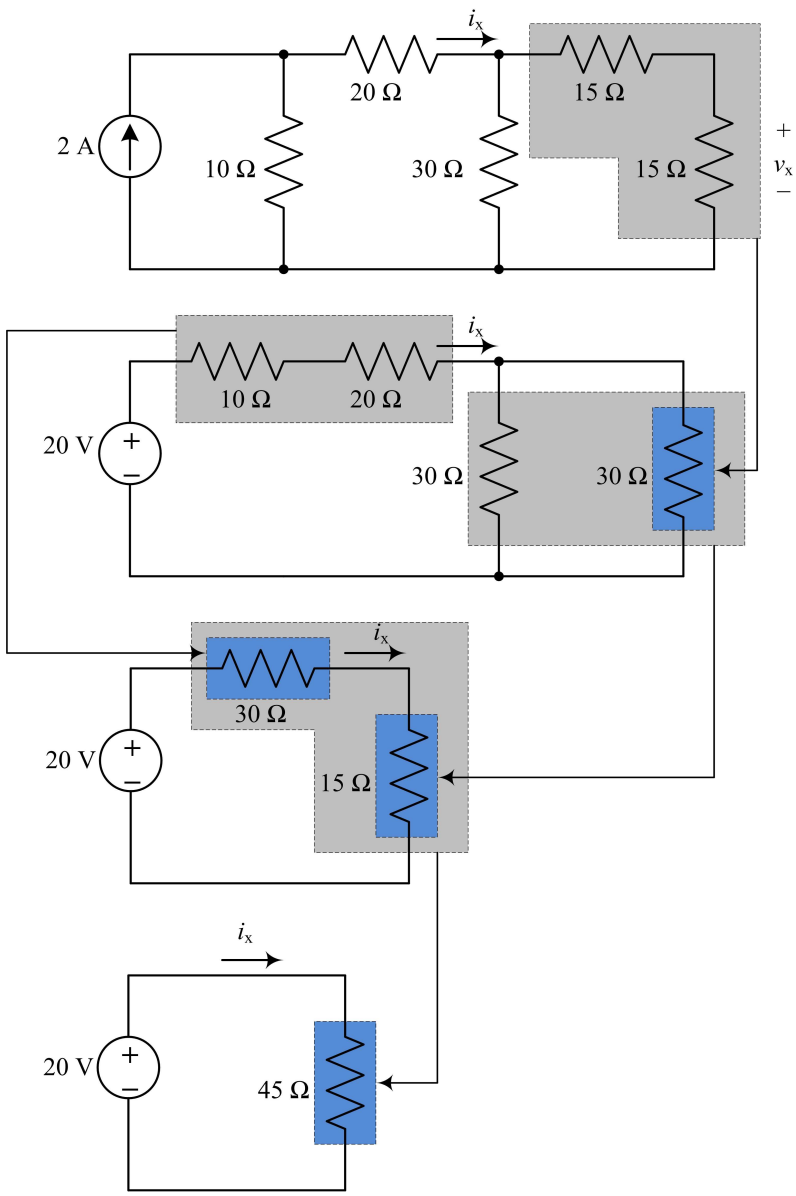

The figure above shows the circuit reduction process. In the first step, perform a source transformation and combine the two 15-Ω resistors in series on the right. Next, combined the 10-Ω and 20-Ω resistors in series and the two 30-Ω resistors in parallel. Finally, combine the 30-Ω and 15-Ω resistors in series. Throughout this reduction process, we have not disturbed current i_x so we can compute it directly as $i_x = 20\,\text{V}/45\,\Omega = 444$ mA. Tracing back to the first circuit with the voltage source, we see that i_x enters a circuit where we can apply current division. In this case, both paths have the same resistance, so the current divides equally between two 30-Ω resistors. The current through each resistor is half of the original or 222 mA. Therefore, 222 mA flows through each 15-Ω resistor in the original circuit. We can then compute $v_x = (15\,\Omega)(0.222\,\text{A}) = 3.33$ V.

Exercise 2–32. Find v_x and v_y using circuit reduction on the circuit in Figure 2–57.

Combine the two voltage sources in series together to get a single 12-V source. To solve for v_x, first note that the voltage source is in parallel with the series combination of resistors on the far right. From the perspective of the left side of the circuit, we can safely ignore the resistors to the right of the voltage source. Perform a source transformation

Analysis and Design of Linear Circuits 9th edition Thomas Solutions Manual

on the 12-V source and the 1-kΩ resistor to its left to get a 12-mA current source in parallel with a 1-kΩ resistor. Now perform current division to find the current through the 1.5-kΩ resistor as follows:

$$i_x = \left[\frac{\dfrac{1}{1.5+2.2}}{\dfrac{1}{1.5+2.2} + \dfrac{1}{3.3} + \dfrac{1}{1}} \right] (-12\,\text{mA}) = -2.0614\,\text{mA}$$

Note the sign convention for v_x introduces the negative sign for the current. Apply Ohm's law to find the voltage $v_x = (1500\,\Omega)(-0.0020614\,\text{A}) = -3.092$ V.

To solve for v_y, perform voltage division by applying the equivalent 12-V source across the two resistors to the right as follows:

$$v_y = \left(\frac{3.3}{1+3.3} \right) (12\,\text{V}) = 9.2093\,\text{V}$$

Exercise 2–33. Find the voltage across the current source in Figure 2–59.

Combine the resistors on the left in series to get an equivalent resistance of $2.2 + 1.5 + 1 = 4.7\,\text{k}\Omega$. Combine the resistors on the right in series to get an equivalent resistance of $1 + 3.3 = 4.3\,\text{k}\Omega$. Combine the two equivalent resistances in parallel to get a final equivalent resistance of $4.7 \parallel 4.3 = 2.2456\,\text{k}\Omega$. The current flowing through the equivalent resistance yields a voltage of $(2.2456\,\text{k}\Omega)(0.1\,\text{mA}) = 224.56$ mV. Given the sign convention in Figure 2–59, the source voltage is negative and $v_S = -224.56$ mV.

Exercise 2–34. Use Multisim to find all the voltages and currents in the circuit of Figure 2–47(a) (Example 2–22).

The required Multisim circuit is shown below.

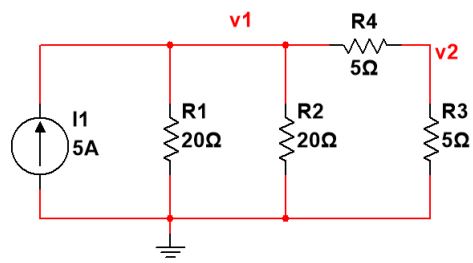

The simulation results are shown below.

Exercise02_34
DC Operating Point Analysis

	Variable	Operating point value
1	V(v1)	25.00000
2	V(v1)-V(v2)	12.50000
3	V(v2)	12.50000
4	I(R1)	1.25000
5	I(R2)	1.25000
6	I(R3)	2.50000
7	I(R4)	2.50000

Analysis and Design of Linear Circuits 9th edition Thomas Solutions Manual

2.2 Problem Solutions

Problem 2–1. The current through a 47-kΩ resistor is 2.2 mA. Find the voltage across the resistor.

Using Ohm's law we have $v = Ri = (47 \times 10^3\ \Omega)(2.2 \times 10^{-3}\ \text{A}) = 103.4$ V.

Problem 2–2. The voltage across a particular resistor is 8.60 V and the current is 366 μA. What is the actual resistance of the resistor? Using Appendix G, what is the likely standard value of the resistor?

Using Ohm's law we can solve for resistance as $R = v/i = (8.60\,\text{V})/(366 \times 10^{-6}\ \text{A}) = 23.4973\,\text{k}\Omega$. Using the table of standard values, the resistor is likely marked as a 22-kΩ or 24-kΩ resistor.

Problem 2–3. You can choose to connect either a 4.7-kΩ resistor or a 47-kΩ resistor across a 5-V source. Which will draw the least current from the source? What is that current?

Ohm's law states that $v = Ri$, so solving for current we have $i = v/R$. To minimize the current, we need to maximize the resistance, so the 47-kΩ resistor will draw less current than the 4.7-kΩ resistor. Solving for current, we have $i = (5\,\text{V})/(47\,\text{k}\Omega) = 106.383\ \mu\text{A}$. The 4.7-kΩ resistor will draw 10 times as much current as the 47-kΩ resistor.

Problem 2–4. A 0.5-A fuse has a nominal resistance of 256 mΩ. How much voltage is dropped across the fuse at maximum current?

The maximum current is the same as the fuse rating or 0.5 A = 500 mA. Use Ohm's law to find the voltage at the maximum current as $v = iR = (500\,\text{mA})(256\,\text{m}\Omega) = 128\,\text{mV}$.

Problem 2–5. In Figure P2–5 the resistor dissipates 50 W.

(a) Find R_x.

The power dissipated by a resistor can be written as $p_x = v^2/R_x$. Solving for the resistance, we have:

$$R_x = \frac{v^2}{p_x} = \frac{(120\,\text{V})^2}{50\,\text{W}} = 288\,\Omega.$$

(b) Will the fuse blow?

Use Ohm's law to solve for the current as $i = v/R_x = (120\,\text{V})/(288\,\Omega) = 416.7\,\text{mA}$. The current is less than the fuse rating of 500 mA, so the fuse will not blow.

Problem 2–6. In Figure P2–6 find R_x and the power supplied by the source.

Using Ohm's law to solve for resistance, we have $R_x = v/i = (100\,\text{V})/(10\,\text{mA}) = 10\,\text{k}\Omega$. To find the source power, note that the current source is connected in parallel with the resistor, so they share the same voltage. The power supplied by the source is $p = vi = (100\,\text{V})(10\,\text{mA}) = 1$ W.

Problem 2–7. A resistor found in the lab has three orange stripes followed by a gold stripe. An ohmmeter measures its resistance as 34.9 kΩ. Is the resistor properly color coded? (See Appendix G for color code.)

Since there are three colored stripes and a gold stripe, the first two stripes are the significant digits, the third stripe is the multiplier, and the gold stripe is the tolerance. Using the color code table, the significant digits for the first two stripes are 3 and 3. The multiplier associated with orange is 1 k, so we have $33 \times 1000 = 33\,\text{k}\Omega$. The tolerance associated with the gold stripe is ±5%, which gives a range of resistances from 31.35 to 34.65 kΩ. The resistor measured outside of this range, but its measured value is within 10% of 33 kΩ, so it should have a silver tolerance stripe in place of the gold one.

Problem 2–8. A 100-kΩ resistor has a power rating of 0.25 W. Find the maximum current that can flow through the resistor.

The power dissipated by a resistor can be expressed as $p = i^2 R$. Solving for the current, we have:

$$i = \sqrt{\frac{p}{R}} = \sqrt{\frac{0.25\,\text{W}}{100\,\text{k}\Omega}} = 1.5811\,\text{mA}.$$

Analysis and Design of Linear Circuits 9th edition Thomas Solutions Manual

Problem 2–9. Figure P2–9 shows the circuit symbol for a class of two-terminal devices called diodes. The i-v relationship for a specific pn junction diode is $i = 5 \times 10^{-17}\left(e^{40v} - 1\right)$ A.

(a) Use this equation to find i and p for $v = 0$, ± 0.1, ± 0.2, ± 0.4, ± 0.8, and ± 1.0 V. Use these data to plot the i-v characteristic of the element.

For each voltage, use the given equation to compute the current and then use $p = vi$ to compute the associated power. MATLAB is appropriate for these calculations and plotting.

```
v = [-1.0, -0.8, -0.4, -0.2, -0.1, 0 0.1, 0.2, 0.4, 0.8, 1.0];
ii = 5e-17*(exp(40*v)-1);
p = v.*ii;
Results = [v' ii' p']
```

The corresponding MATLAB output is shown below followed by a plot of the data.

```
Results =
    -1.0000e+000   -50.0000e-018    50.0000e-018
  -800.0000e-003   -50.0000e-018    40.0000e-018
  -400.0000e-003   -50.0000e-018    20.0000e-018
  -200.0000e-003   -49.9832e-018     9.9966e-018
  -100.0000e-003   -49.0842e-018     4.9084e-018
     0.0000e+000     0.0000e+000     0.0000e+000
   100.0000e-003     2.6799e-015   267.9908e-018
   200.0000e-003   148.9979e-015    29.7996e-015
   400.0000e-003   444.3055e-012   177.7222e-012
   800.0000e-003     3.9481e-003     3.1585e-003
     1.0000e+000    11.7693e+000    11.7693e+000
```

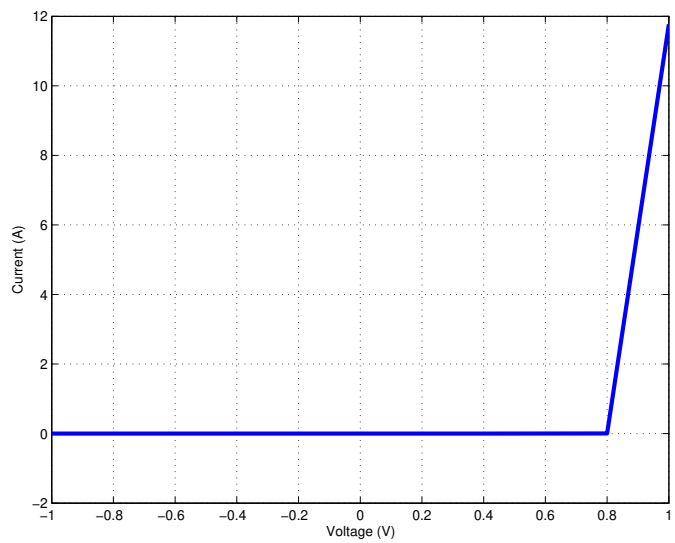

(b) Is the diode linear or nonlinear, bilateral or nonbilateral, and active or passive?

The plot in Part (a) shows that the device is nonlinear and nonbilateral. The power for the device is always positive, so it is passive.

(c) Use the diode model to predict i and p for $v = 5$ V. Do you think the model applies to voltages in this range? Explain.

For $v = 5$ V, $i = 36.13 \times 10^{69}$ A and $p = 180.65 \times 10^{69}$ W. The model is not valid because the current and power are too large.

Analysis and Design of Linear Circuits 9th edition Thomas Solutions Manual

(d) Repeat (c) for $v = -5$ V.

For $v = -5$ V, $i = -50.00 \times 10^{-18}$ A and $p = 250.00 \times 10^{-18}$ W. The model is valid because the current and power are both essentially zero.

Problem 2–10. A thermistor is a temperature-sensing element composed of a semiconductor material which exhibits a large change in resistance proportional to a small change in temperature. A particular thermistor has a resistance of 5 kΩ at 25°C. Its resistance is 340 Ω at 100°C. Assuming a straight-line relationship between these two values, at what temperature will the thermistor's resistance equal 1 kΩ?

Find the rate at which the resistance changes for each degree of temperature.

$$\Delta_\Omega = \frac{5000 - 340}{25 - 100} = \frac{4660}{-75} = -62.13\ \Omega/°\text{C}$$

To go from 5 kΩ to 1 kΩ, the resistance changes by −4 kΩ, which means the temperature change is $-4000/(-62.13) = 64.38$°C. The final temperature is $25 + 64.38 = 89.38$°C.

Problem 2–11. In Figure P2–11 $i_2 = -6$ A and $i_3 = 2$ A. Find i_1 and i_4.

The KCL equations for nodes B and C are

$$\begin{aligned} -i_1 - i_2 &= 0 \\ i_2 + i_3 - i_4 &= 0 \end{aligned}$$

Using the first equation, we can solve for $i_1 = -i_2 = 6$ A. Using the second equation, we can solve for $i_4 = i_2 + i_3 = -6 + 2 = -4$ A.

Problem 2–12. In Figure P2–12 determine which elements are in series, parallel, or neither. How many different nodes and loops are there in the circuit? Then if $v_2 = 3$ V and $v_3 = 5$ V, find v_1, v_4 and v_5.

Elements 1 and 2 are connected by a single node and share the same current, so they are in series. There are no elements in parallel with each other. Elements 3, 4, and 5 are neither in series nor in parallel with any other elements. There are four nodes in the figure: (1) between elements 1 and 2, (2) between elements 2, 3, and 4, (3) between elements 4 and 5, and (4) between elements 1, 3, and 5. You could argue that since the third and fourth nodes are both connected to ground that they are the same node and there are only three unique nodes in the figure. Claiming that there are three or four nodes in the circuit are both acceptable answers. There are three loops in the circuit: (1) elements 1, 2, and 3, (2) elements 3, 4, and 5, and (3) elements 1, 2, 4, and 5.

We can use a KVL equation on the left loop and the two given voltages to solve for v_1. The KVL equation is $-v_1 + v_2 + v_3 = 0$. Solving for $v_1 = v_2 + v_3 = 3 + 5 = 8$ V. In examining the circuit, there is a ground on each side of v_5, so the voltage difference across this element is zero, $v_5 = 0$ V. We can now use KVL around the right loop to solve for v_4. The KVL equation is $-v_3 + v_4 + v_5 = 0$. Solve for $v_4 = v_3 - v_5 = 5 - 0 = 5$ V.

Problem 2–13. In Figure P2–13, $i_2 = -50$ mA and $i_4 = 15$ mA. Find i_1 and i_3.

The KCL equations for the circuit are

$$\begin{aligned} &\text{Node A} \quad -i_1 - i_2 - i_3 = 0 \\ &\text{Node B} \quad i_3 - i_4 = 0 \\ &\text{Node C} \quad i_1 + i_2 + i_4 = 0 \end{aligned}$$

Using the equation for node C, we can solve $i_1 = -i_2 - i_4 = 50 - 15 = 35$ mA. Using the equation for node B, we can solve $i_3 = i_4 = 15$ mA.

Problem 2–14. For the circuit in Figure P2–14:

(a) Identify the nodes and at least five loops in the circuit.

The are four nodes and many loops. There are only three independent KVL equations. The nodes are labeled A, B, C, and D. Valid loops include the following sequences of elements: (1, 3, 2), (1, 3, 4, 5), (1, 6, 4, 2), (1, 6, 5), (2, 4, 5), (2, 3, 6, 5), and (3, 6, 4).

Analysis and Design of Linear Circuits 9th edition Thomas Solutions Manual

(b) Identify any elements connected in series or in parallel.

In this circuit, none of the elements are connected in series and none of them are connected in parallel.

(c) Write KCL and KVL connection equations for the circuit.

The KCL equations are

$$\text{Node A} \quad -i_2 - i_3 - i_4 = 0$$

$$\text{Node B} \quad -i_1 + i_3 - i_6 = 0$$

$$\text{Node C} \quad i_1 + i_2 + i_5 = 0$$

$$\text{Node D} \quad i_4 - i_5 + i_6 = 0$$

Three independent KVL equations are

$$\text{Loop 1 3 2} \quad -v_1 - v_3 + v_2 = 0$$

$$\text{Loop 2 4 5} \quad -v_2 + v_4 + v_5 = 0$$

$$\text{Loop 3 6 4} \quad v_3 + v_6 - v_4 = 0$$

Problem 2–15. In Figure P2–14 $v_2 = 20$ V, $v_3 = -20$ V, and $v_4 = 6$ V. Find v_1, v_5, and v_6.

The KVL equations are

$$\text{Loop 1 3 2} \quad -v_1 - v_3 + v_2 = 0$$

$$\text{Loop 2 4 5} \quad -v_2 + v_4 + v_5 = 0$$

$$\text{Loop 3 6 4} \quad v_3 + v_6 - v_4 = 0$$

Using the first equation, we can solve for $v_1 = v_2 - v_3 = 20 + 20 = 40$ V. Using the second equation, we can solve for $v_5 = v_2 - v_4 = 20 - 6 = 14$ V. Using the third equation, we can solve $v_6 = v_4 - v_3 = 6 + 20 = 26$ V.

Problem 2–16. The circuit in Figure P2–16 is organized around the three signal lines A, B, and C.

(a) Identify the nodes and at least five loops in the circuit.

The are four nodes and many loops. The nodes are labeled A, B, C, and D. Valid loops include the following sequences of elements: (1, 3, 2), (1, 3, 4, 5), (1, 6, 4, 2), (1, 6, 5), (2, 4, 5), (2, 3, 6, 5), and (3, 6, 4).

(b) Write KCL connection equations for the circuit.

The KCL equations are

$$\text{Node A} \quad -i_2 - i_3 - i_4 = 0$$

$$\text{Node B} \quad -i_1 + i_3 - i_6 = 0$$

$$\text{Node C} \quad i_1 + i_2 + i_5 = 0$$

$$\text{Node D} \quad i_4 - i_5 + i_6 = 0$$

(c) If $i_1 = -30$ mA, $i_2 = -18$ mA, and $i_3 = 75$ mA, find i_4, i_5, and i_6.

Using the KCL equation at node A, we can solve for $i_4 = -i_2 - i_3 = 18 - 75 = -57$ mA. Using the KCL equation at node C, we can solve for $i_5 = -i_1 - i_2 = 30 + 18 = 48$ mA. Using the KCL equation at node D, we can solve for $i_6 = i_5 - i_4 = 48 + 57 = 105$ mA.

Analysis and Design of Linear Circuits 9th edition Thomas Solutions Manual

(d) Show that the circuit in Figure P2–16 is identical to that in Figure P2–14.

The circuits have the same nodes, connections, and current directions, so they must be equivalent.

Problem 2–17.

(a) Are any of the elements in Figure P2–17 in series or parallel? If so, identify the ones that are.

None of the elements are in series or parallel.

(b) Then if $v_2 = 10$ V, $v_4 = 10$ V, and $v_5 = 5$ V, find v_1, v_3, and v_6.

The KVL equations for the circuit are

$$\text{Loop } 1\,2\,3 \quad -v_1 + v_2 + v_3 = 0$$

$$\text{Loop } 3\,4\,5 \quad -v_3 + v_4 + v_5 = 0$$

$$\text{Loop } 2\,6\,4 \quad -v_2 + v_6 - v_4 = 0$$

Using the second loop equation, we can solve for $v_3 = v_4 + v_5 = 10 + 5 = 15$ V. Using the first loop equation, we can solve for $v_1 = v_2 + v_3 = 10 + 15 = 25$ V. Finally, using the third loop equation, we can solve for $v_6 = v_2 + v_4 = 10 + 10 = 20$ V.

(c) Suppose that element 2 became shorted, i.e., $v_2 = 0$ V. Repeat part (a).

With element 2 shorted, elements 1 and 3 share two common nodes and are in parallel. No other elements are in series or parallel.

Problem 2–18. Are any of the elements in Figure P2–18 in series or parallel? If so, identify the ones that are. Then if $i_1 = -5$ mA, $i_2 = 10$ mA, and $i_3 = -15$ mA, find i_4 and i_5.

None of the elements are in series. Elements 1 and 2 are in parallel, since they share nodes A and B. Elements 3 and 4 are in parallel, since they share nodes A and C. The KCL equations for the circuit are

$$\text{Node A} \quad i_1 - i_2 + i_3 - i_4 = 0$$

$$\text{Node B} \quad -i_1 + i_2 - i_5 = 0$$

$$\text{Node C} \quad -i_3 + i_4 + i_5 = 0$$

Using the first node equation, we can solve for $i_4 = i_1 - i_2 + i_3 = -5 - 10 - 15 = -30$ mA. Using the second node equation, we can solve for $i_5 = -i_1 + i_2 = 5 + 10 = 15$ mA.

Analysis and Design of Linear Circuits 9th edition Thomas Solutions Manual

Problem 2–19.

(a) Use the passive sign convention to assign voltage variables consistent with the currents in Figure P2–18. Write three KVL connection equations using these voltage variables.

The figure below shows the original Figure P2–18 with the voltages labeled following the passive sign convention.

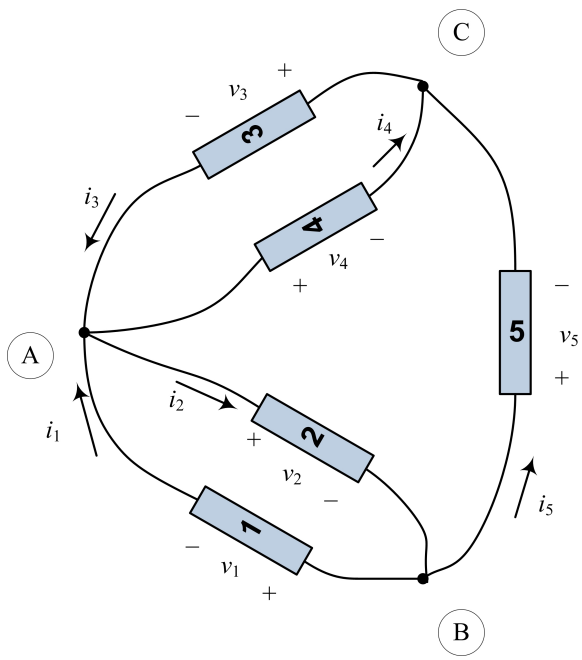

The KVL equations for the circuit are

$$\text{Loop 1 2} \qquad v_1 + v_2 = 0$$

$$\text{Loop 2 4 5} \qquad -v_2 + v_4 - v_5 = 0$$

$$\text{Loop 3 4} \qquad v_3 + v_4 = 0$$

(b) If $v_4 = 0$ V, what can be said about the voltages across all the other elements?

If $v_4 = 0$ V, then the third loop equation indicates that $v_3 = 0$ V. Applying these voltages to the other two loop equations, we have $v_1 = -v_2$ and $v_2 = -v_5$, which implies $v_1 = v_5$. The voltages across elements 1, 2, and 5 share the same magnitudes.

Problem 2–20. The KVL equations for a two-loop circuit are:

$$\text{Loop 1} \qquad -v_1 + v_2 + v_3 + v_4 = 0$$

$$\text{Loop 2} \qquad -v_3 - v_4 + v_5 = 0$$

Draw the circuit diagram and indicate the reference directions for the element voltages.

The first loop contains elements 1, 2, 3, and 4. The second loop contains elements 3, 4, and 5. One possible circuit diagram for this combination of elements is shown below, including the reference directions for the element voltages.

Analysis and Design of Linear Circuits 9th edition Thomas Solutions Manual

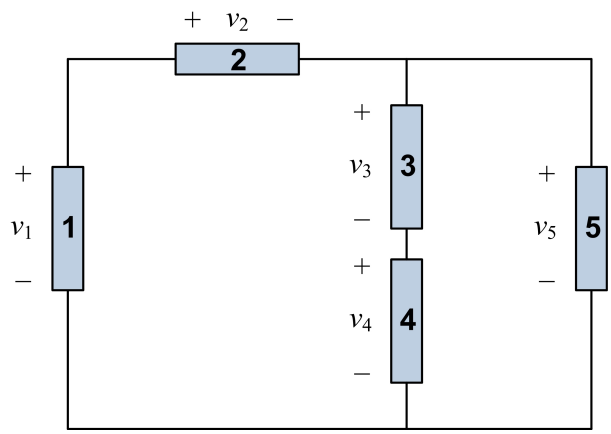

Problem 2–21. For the circuit in Figure P2–21, write a complete set of connection and element constraints and then find i_x and v_x.

Start by annotating the circuit as shown below.

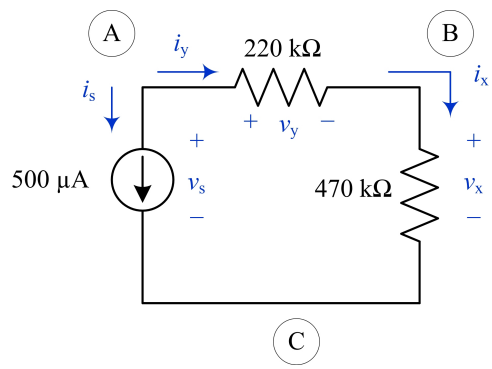

There is one KVL connection equation:

$$-v_s + v_y + v_x = 0$$

We can write KCL connection equations for Nodes A, B, and C:

$$-i_s - i_y = 0$$

$$i_y - i_x = 0$$

$$i_s + i_x = 0$$

The element constraints are:

$$i_s = 500\,\mu\text{A}$$

$$v_y = (220\,\text{k}\Omega)i_y$$

$$v_x = (470\,\text{k}\Omega)i_x$$

Solving the third KCL equation, we find $i_x = -i_s = -500\,\mu$A. Applying the third element constraint, we find $v_x = (470\,\text{k}\Omega)(-500\,\mu\text{A}) = -235$ V.

Analysis and Design of Linear Circuits 9th edition Thomas Solutions Manual

Problem 2–22. Find v_x and i_x in Figure P2–22. Remove the 33-kΩ resistor and repeat. What effect did removing the 33-kΩ resistor have on the overall circuit? Did the power supplied by the source change?

Start by annotating the circuit as shown below.

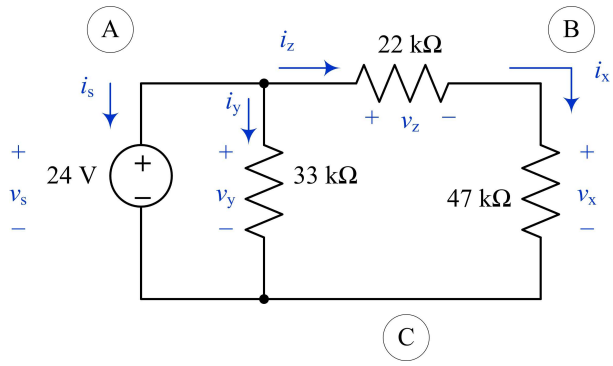

There are now two KVL connection equations:

$$\begin{aligned} -v_s + v_y &= 0 \\ -v_y + v_z + v_x &= 0 \end{aligned}$$

We can write KCL connection equations for Nodes A, B, and C:

$$\begin{aligned} -i_s - i_y - i_z &= 0 \\ i_z - i_x &= 0 \\ i_s + i_y + i_x &= 0 \end{aligned}$$

The element constraints are:

$$\begin{aligned} v_s &= 24\,\text{V} \\ v_y &= (33\,\text{k}\Omega)i_y \\ v_z &= (22\,\text{k}\Omega)i_z \\ v_x &= (47\,\text{k}\Omega)i_x \end{aligned}$$

We can solve for v_x and i_x. Solving the second KCL equation, we find $i_x = i_z$. We can now solve for v_x and i_x as follows:

$$\begin{aligned} v_s &= v_y = 24\,\text{V} \\ v_y &= v_x + v_z \\ 24 &= (47\,\text{k}\Omega)i_x + (22\,\text{k}\Omega)i_z \\ 24 &= (47\,\text{k}\Omega)i_x + (22\,\text{k}\Omega)i_x = (69\,\text{k}\Omega)i_x \\ i_x &= 347.826\,\mu\text{A} \\ v_x &= (47\,\text{k}\Omega)i_x = (47\,\text{k}\Omega)(347.826\,\mu\text{A}) = 16.3478\,\text{V} \end{aligned}$$

Removing the 33-kΩ resistor does not change the results for v_x and i_x because the resistor is connected in parallel with the voltage source. The 33-kΩ resistor *does* change the total current and power provided by the source. Without

Analysis and Design of Linear Circuits 9th edition Thomas Solutions Manual

the 33-kΩ resistor, there is a single current of 347.826 μA and it flows through the source, which provides a power of $p_s = (24\,\text{V})(347.826\,\mu\text{A}) = 8.34783\,\text{mW}$. The additional 33-kΩ resistor has a 24-V drop across it and draws a current $i_y = (24\,\text{V})/(33\,\text{k}\Omega) = 727.273\,\mu\text{A}$. The first KCL equation tells us that the negative of the current flowing through the source is the sum of i_y and i_z or $-i_s = i_y + i_z = 347.826 + 727.273 = 1.0751\,\text{mA}$. The power provided by the source is now $p_s = (24\,\text{V})(1.0751\,\text{mA}) = 25.8024\,\text{mW}$, which is over three times the power provided by the source without the 33-kΩ resistor.

Problem 2–23. A modeler wants to light his model building using miniature grain-of-wheat light bulbs connected in parallel as shown in Figure P2–23. He uses two 1.5-V "C-cells" to power his lights. He wants to use as many lights as possible, but wants to limit his current drain to 500 μA to preserve the batteries. If each light has a resistance of 50 kΩ, how many lights can he install and still be under his current limit?

The two 1.5-V batteries are connected in series to provide a total of 3 V to the circuit. Since the light bulbs are connected in parallel, the entire 3 V appears across each one. Using Ohm's law, the current through each bulb is $i = v/R = (3\,\text{V})/(50\text{k}\Omega) = 60\,\mu\text{A}$. The design requires the batteries to provide no more the 500 μA. Divide the maximum current by the current per bulb to get $(500\,\mu\text{A})/(60\,\mu\text{A}) = 8.333$, and round down to find that we can connect up to 8 bulbs in parallel across the batteries.

Problem 2–24. In Figure P2–24:

(a) Assign a voltage and current variable to every element.

The figure below shows the voltage and current labels following the passive sign convention.

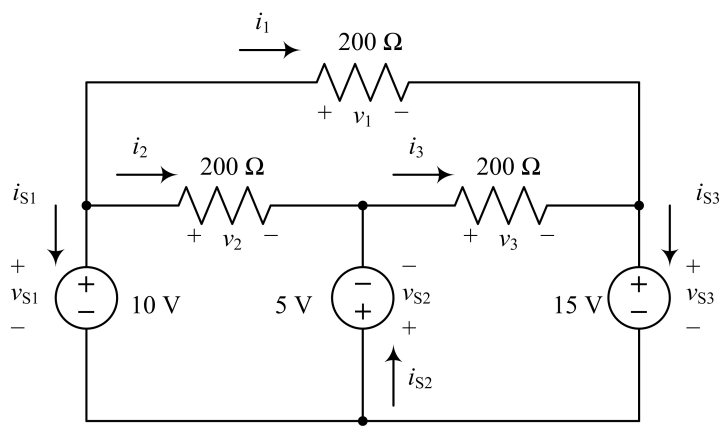

(b) Use KVL to find the voltage across each resistor.

The KVL equations are

$$\begin{aligned} -v_{S1} + v_1 + v_{S3} &= 0 \\ -v_{S1} + v_2 - v_{S2} &= 0 \\ v_{S2} + v_3 + v_{S3} &= 0 \end{aligned}$$

Solving the first equation, we have $v_1 = v_{S1} - v_{S3} = 10 - 15 = -5$ V. Solving the second equation, we have $v_2 = v_{S1} + v_{S2} = 10 + 5 = 15$ V. Solving the third equation, we have $v_3 = -v_{S2} - v_{S3} = -5 - 15 = -20$ V.

(c) Use Ohm's law to find the current through each resistor.

Analysis and Design of Linear Circuits 9th edition Thomas Solutions Manual

Applying $i = v/R$ to each resistor, we have

$$i_1 = \frac{v_1}{R_1} = \frac{-5}{200} = -25\text{ mA}$$

$$i_2 = \frac{v_2}{R_2} = \frac{15}{200} = 75\text{ mA}$$

$$i_3 = \frac{v_3}{R_3} = \frac{-20}{200} = -100\text{ mA}$$

(d) Use KCL to find the current through each voltage source.

The KCL equations are

$$-i_1 - i_2 - i_{S1} = 0$$

$$i_2 - i_3 + i_{S2} = 0$$

$$i_1 + i_3 - i_{S3} = 0$$

Solving the first equation, we have $i_{S1} = -i_1 - i_2 = 25 - 75 = -50$ mA. Solving the second equation, we have $i_{S2} = i_3 - i_2 = -100 - 75 = -175$ mA. Solving the third equation, we have $i_{S3} = i_1 + i_3 = -25 - 100 = -125$ mA.

Problem 2–25. Find the power provided by the source and the current through the 68-kΩ resistor in Figure P2–25.

The figure below shows the voltage and current labels following the passive sign convention.

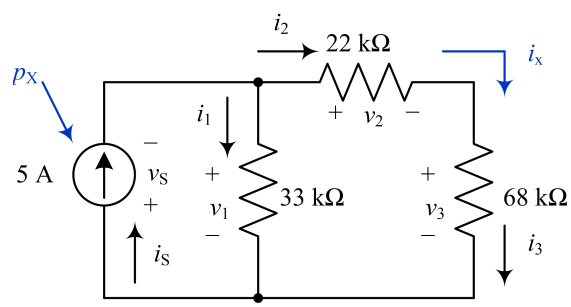

The KCL equations are

$$i_S - i_1 - i_2 = 0$$

$$i_2 - i_3 = 0$$

The KVL equations are

$$v_S + v_1 = 0$$

$$-v_1 + v_2 + v_3 = 0$$

The current source requires $i_S = 5$ A. The first KCL equation implies $i_1 = 5\text{ A} - i_2$ and the second implies $i_2 = i_3$. Using Ohm's law and substituting these equations into the second KVL equation, we can solve for the source power as

Analysis and Design of Linear Circuits 9th edition Thomas Solutions Manual

follows:

$$
\begin{aligned}
v_1 &= v_2 + v_3 \\
R_1 i_1 &= R_2 i_2 + R_3 i_3 \\
R_1(5 - i_2) &= R_2 i_2 + R_3 i_2 \\
33000(5 - i_2) &= 22000 i_2 + 68000 i_2 \\
165000 - 33000 i_2 &= 90000 i_2 \\
123000 i_2 &= 165000 \\
i_2 &= 1.341\ \text{A} \\
i_3 &= i_2 = 1.341\ \text{A} \\
i_1 &= 5\ \text{A} - i_2 = 5\ \text{A} - 1.341\ \text{A} = 3.659\ \text{A} \\
v_S &= -v_1 = -R_1 i_1 = -(33\ \text{k}\Omega)(3.659\ \text{A}) = -120.732\ \text{kV} \\
p_S &= v_S\, i_S = (-120.732\ \text{kV})(5\ \text{A}) = -603.659\ \text{kW}
\end{aligned}
$$

Therefore, $p_X = p_S = -603.659\,\text{kW}$ and $i_X = i_3 = 1.341\ \text{A}$.

Problem 2–26. Figure P2–26 shows a subcircuit connected to the rest of the circuit at four points.

(a) Use element and connection constraints to find v_x and i_x.

Label the 5-kΩ resistor as R_1 with the current flowing from left to right. Label the 2-kΩ resistor as R_2 with the positive sign at the bottom. Using Ohm's law, we can compute $i_1 = v_1/R_1 = (20\ \text{V})/(5\ \text{k}\Omega) = 4\ \text{mA}$. The KCL equation at the center node is $4\ \text{mA} + i_1 - i_2 - i_x = 0$. Substituting in the known values, we can solve for i_x as $i_x = 4\ \text{mA} + i_1 - i_2 = 4\ \text{mA} + 4\ \text{mA} - 6\ \text{mA} = 2\ \text{mA}$. Using Ohm's law $v_x = R_x i_x = (8\ \text{k}\Omega)(2\ \text{mA}) = 16\ \text{V}$.

(b) Show that the sum of the currents into the rest of the circuit is zero.

The sum of the currents entering the rest of the circuit is $-i_1 + i_2 - 4\ \text{mA} + i_x = -4\ \text{mA} + 6\ \text{mA} - 4\ \text{mA} + 2\ \text{mA} = 0\ \text{mA}$.

(c) Find the voltage v_A with respect to the ground in the circuit.

From the ground to v_A there are three voltages. First, there is an increase across the voltage source of 12 V. Next, there is an increase across R_x of 16 V. Finally, there is a decrease across R_2 of $v_2 = R_2 i_2 = (2\ \text{k}\Omega)(6\ \text{mA}) = 12\ \text{V}$. Therefore, $v_A = 12\ \text{V} + 16\ \text{V} - 12\ \text{V} = 16\ \text{V}$.

Problem 2–27. Figure P2–27 shows a resistor with one terminal connected to ground and the other connected to an arrow. The arrow symbol is used to indicate a connection to one terminal of a voltage source whose other terminal is connected to ground. The label next to the arrow indicates the source voltage at the ungrounded terminal. Find the voltage across, current through, and power dissipated in the resistor.

Using the passive sign convention, the voltage across the resistor is the voltage on the right side minus the voltage on the left side. Therefore, $v_x = -15 - 0 = -15\ \text{V}$. Use Ohm's law to find $i_x = v_x/R_x = (-15\ \text{V})/(220\ \text{k}\Omega) = -68.18\ \mu\text{A}$. The power dissipated by the resistor is $p_x = v_x i_x = (-15\ \text{V})(-68.18\ \mu\text{A}) = 1.023\ \text{mW}$.

Problem 2–28. A circuit similar to the one shown in Figure P2–28 is used in flash comparator circuits studied later. Find the voltages v_1, v_2, and v_3.

The circuit has an 8-V source connected to ground through a series combination of four resistors. The voltage labels v_1, v_2, and v_3 indicate voltage measurements and do not change the current flowing between the source and ground. We can draw an equivalent circuit, as shown below.

Analysis and Design of Linear Circuits 9th edition Thomas Solutions Manual

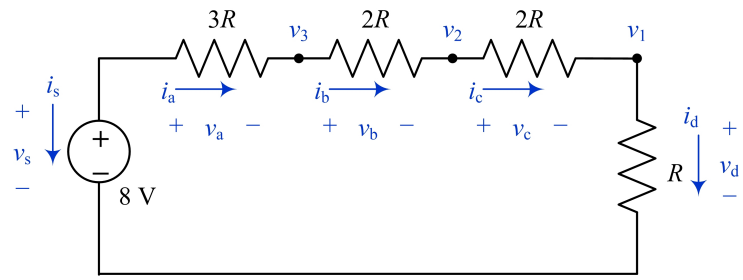

There is one KVL equation and four KCL equations for the circuit, as follows:

$$\begin{aligned} -v_S + v_a + v_b + v_c + v_d &= 0 \\ i_S + i_a &= 0 \\ -i_a + i_b &= 0 \\ -i_b + i_c &= 0 \\ -i_c + i_d &= 0 \end{aligned}$$

From the KCL equations we can conclude that all of the currents have the same magnitude:

$$-i_S = i_a = i_b = i_c = i_d$$

We can then substitute Ohm's law into the KVL equation to solve for an expression for the current.

$$\begin{aligned} v_S &= v_a + v_b + v_c + v_d \\ 8\,\text{V} &= 3Ri_a + 2Ri_b + 2Ri_c + Ri_d \\ 8\,\text{V} &= 3Ri_a + 2Ri_a + 2Ri_a + Ri_a \\ 8\,\text{V} &= (3R + 2R + 2R + R)i_a = 8Ri_a \\ i_a &= \frac{8\,\text{V}}{8R} = \frac{1\,\text{V}}{R} \end{aligned}$$

Solve for the voltages across the resistors:

$$\begin{aligned} v_a &= 3Ri_a = \frac{3R}{R} = 3\,\text{V} \\ v_b &= 2Ri_a = \frac{2R}{R} = 2\,\text{V} \\ v_c &= 2Ri_a = \frac{2R}{R} = 2\,\text{V} \\ v_d &= Ri_a = \frac{R}{R} = 1\,\text{V} \end{aligned}$$

We can solve for the numbered voltages as follows:

$$\begin{aligned} v_1 &= v_d = 1\,\text{V} \\ v_2 &= v_c + v_d = 3\,\text{V} \\ v_3 &= v_b + v_c + v_d = 5\,\text{V} \end{aligned}$$

Analysis and Design of Linear Circuits 9th edition Thomas Solutions Manual

Problem 2–29. Find the equivalent resistance R_{EQ} in Figure P2–29.

The 100-Ω resistor and the 300-Ω resistor are in parallel. That combination is in series with the 25-Ω resistor. We can calculate the equivalent resistance as follows:

$$R_{EQ} = 25 + (300 \parallel 100) = 25 + \frac{1}{\frac{1}{300} + \frac{1}{100}} = 25 + \frac{(300)(100)}{300 + 100} = 25 + 75 = 100\,\Omega$$

Problem 2–30. Find the equivalent resistance R_{EQ} in Figure P2–30.

Working from the right to the left, combine the two 100-kΩ resistors in parallel to get an equivalent resistance of $100 \parallel 100 = 50$ kΩ. That resistance is in series with the 47-kΩ resistor, which yields an equivalent resistance of $47 + 50 = 97$ kΩ. Finally, combine the 97-kΩ equivalent resistance in parallel with the 63-kΩ resistor to get $R_{EQ} = 97 \parallel 63 = 38.19$ kΩ.

Problem 2–31. Find R_{EQ} in Figure P2–31 when the switch is open. Repeat when the switch is closed.

When the switch is open, the two 100-Ω resistors are in parallel and that result is in series with the 50-Ω resistor and the 100-Ω resistor on the right. We can calculate $R_{EQ} = 50 + (100 \parallel 100) + 100 = 50 + 50 + 100 = 200\ \Omega$. With the switch closed, the wire shorts out the two 100-Ω resistors, so they do not contribute to the equivalent resistance. The result is that the 50-Ω resistor is in series with the right 100-Ω resistor, so $R_{EQ} = 50 + 100 = 150\ \Omega$.

Problem 2–32. Find R_{EQ} between nodes A and B for each of the circuits in Figure P2–32. What conclusion can you draw about resistors of the same value connected in parallel?

We can calculate the equivalent resistance for Circuit (a) as follows:

$$R_{EQ} = \frac{1}{\frac{1}{R} + \frac{1}{R} + \frac{1}{R}} = \frac{R}{1 + 1 + 1} = \frac{R}{3}$$

For Circuit (b), we have:

$$R_{EQ} = \frac{1}{\frac{1}{R} + \frac{1}{R} + \frac{1}{R} + \frac{1}{R} + \frac{1}{R}} = \frac{R}{1 + 1 + 1 + 1 + 1} = \frac{R}{5}$$

In general, for Circuit (c) with n resistors in parallel, we have:

$$R_{EQ} = \frac{1}{\frac{1}{R} + \frac{1}{R} + \frac{1}{R} + \cdots + \frac{1}{R}} = \frac{R}{1 + 1 + 1 + \cdots + 1} = \frac{R}{n}$$

We can conclude that for identical resistors connected in the parallel, the equivalent resistance is the value of one resistor divided by the number of resistors.

Problem 2–33. In Figure P2–33 find the equivalent resistance between terminals A-B, A-C, A-D, B-C, B-D, and C-D.

For R_{AB}, only the 22-kΩ resistor is active, so $R_{AB} = 22$ kΩ. Similarly for R_{AC}, only the 22-kΩ resistor is active, so $R_{AC} = 22$ kΩ. For R_{AD}, the two 100-kΩ resistors are in parallel and that result is in series with the 22-kΩ resistor, so $R_{AD} = 22 + (100 \parallel 100) = 22 + 50 = 72$ kΩ. For R_{BC}, there is a path between the two terminals with no resistors, so $R_{BC} = 0\ \Omega$. For R_{BD}, ignore the 22-kΩ resistor, and the two 100-kΩ resistors are in parallel to give $R_{BD} = 100 \parallel 100 = 50$ kΩ. Similarly for R_{CD}, ignore the 22-kΩ resistor, and the two 100-kΩ resistors are in parallel to give $R_{CD} = 100 \parallel 100 = 50$ kΩ.

Problem 2–34. In Figure P2–34 find the equivalent resistance between terminals A-B, A-C, A-D, B-C, B-D, and C-D.

For A-B, ignore the 100-Ω resistor connected to terminal C and the 15-Ω resistor connected to terminal D. We then have

$$R_{AB} = [100 \parallel (60 + 40)] + 50 = [100 \parallel 100] + 50 = 50 + 50 = 100\,\Omega$$

For A-C, ignore the 50-Ω resistor connected to terminal B and the 15-Ω resistor connected to terminal D. We then have

$$R_{AC} = [60 \parallel (100 + 40)] + 100 = [60 \parallel 140] + 100 = 42 + 100 = 142\,\Omega$$

Analysis and Design of Linear Circuits 9th edition Thomas Solutions Manual

For A-D, ignore the 50-Ω resistor connected to terminal B and the 100-Ω resistor connected to terminal C. We then have

$$R_{AD} = [60 \parallel (100 + 40)] + 15 = [60 \parallel 140] + 15 = 42 + 15 = 57\,\Omega$$

For B-C, ignore the A terminal and the 15-Ω resistor connected to terminal D. We then have

$$R_{BC} = 50 + [40 \parallel (100 + 60)] + 100 = 50 + [40 \parallel 160] + 100 = 50 + 32 + 100 = 182\,\Omega$$

For B-D, ignore the A terminal and the 100-Ω resistor connected to terminal C. We then have

$$R_{BD} = 50 + [40 \parallel (100 + 60)] + 15 = 50 + [40 \parallel 160] + 15 = 50 + 32 + 15 = 97\,\Omega$$

For C-D, ignore the A terminal and the 50-Ω resistor connected to terminal B. In the center of the circuit, the wire shorts out the 60, 100, and 40-Ω resistors, so we then have

$$R_{CD} = 100 + 0 + 15 = 115\,\Omega$$

Problem 2–35. Using no more than four 1-kΩ resistors, show how the following equivalent resistors can be constructed: 2 kΩ, 500 Ω, 1.5 kΩ, 333 Ω, 250 Ω, and 400 Ω.

The following table presents the solutions.

R_{EQ} (Ω)	Combination of 1-kΩ Resistors
2000	Two resistors in series: $R + R$
500	Two resistors in parallel: $R \parallel R$
1500	One resistor in series with a parallel combination of two resistors: $R + (R \parallel R)$
333	Three resistors in parallel: $R \parallel R \parallel R$
250	Four resistors in parallel: $R \parallel R \parallel R \parallel R$
400	Two resistors in series in parallel with two resistors in parallel: $(R + R) \parallel R \parallel R$

Problem 2–36. Do a source transformation at terminals A and B for each practical source in Figure P2–36.

(a) After the transformation, we will have a voltage source in series with a resistor. The resistance will not change, so $R = 47\,\Omega$. Apply $v_S = i_S R$ to find the voltage source $v_S = (10\,\text{mA})(47\,\Omega) = 470$ mV. Part (a) of the figure below shows the results.

(b) After the transformation, we will have a current source in parallel with a resistor. The resistance will not change, so $R = 100$ kΩ. Apply $i_S = v_S/R$ to find the current source $i_S = (5\,\text{V})/(100\,\text{k}\Omega) = 50\,\mu\text{A}$. Part (b) of the figure below shows the results. Note the direction of the current source.

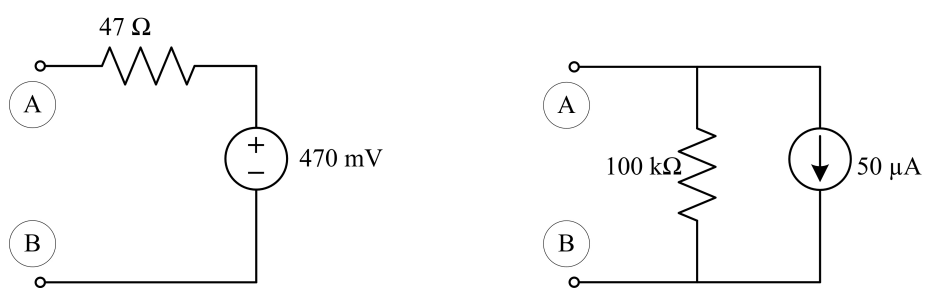

(a) (b)

Problem 2–37. Find the equivalent circuit at terminals A-B for each of the circuits shown in Figure P2–37.

(a) A current source in series with a resistor is equivalent to the current source.

Analysis and Design of Linear Circuits 9th edition Thomas Solutions Manual

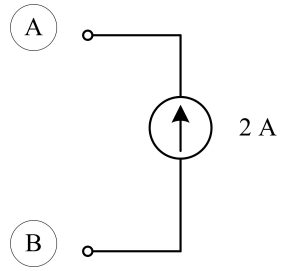

(b) A current source in series with another current source with a different magnitude is not a valid circuit design. The two sources indicate that there are two different current values, which is not possible. There is no equivalent circuit for this circuit.

(c) A voltage source in parallel with a resistor is equivalent to the voltage source.

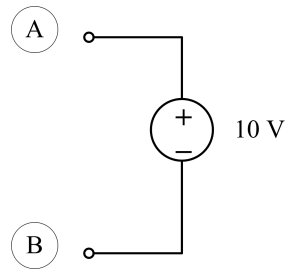

(d) Two voltage sources in series combine by summing the voltage values. In this case, the equivalent voltage is $v_{EQ} = 20 - 15 = 5$ V.

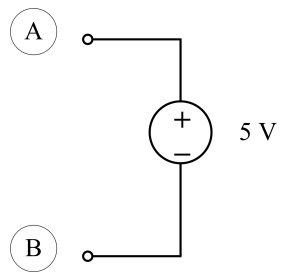

(e) Connecting a voltage source in parallel with a current source is probably a poor design choice. However, if a resistor is connected across terminals A-B, then it will have a voltage drop consistent with the voltage source. The current source will provide current to the resistor or to the voltage source, depending on the value of the resistor. From an equivalency perspective, the resistor behaves as if it is connected to the voltage source alone.

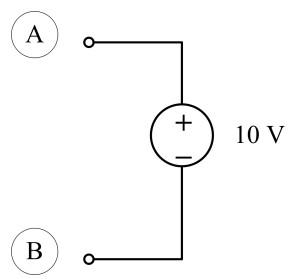

(f) Two current sources in parallel combine by summing the current values. In this case, the equivalent current is $i_{EQ} = 10 + 50 = 60$ mA.

Analysis and Design of Linear Circuits 9th edition Thomas Solutions Manual

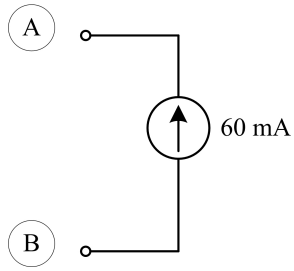

Problem 2–38. Select the value of R_x in Figure P2–38 so that $R_{EQ} = 100$ kΩ.

Combining the resistors from right to left, we can find the following expression for R_{EQ}, where all resistances are in kΩ.

$$\begin{aligned}
R_{EQ} &= 40 + 47 + \left[22 \parallel (R_x + 10)\right] \\
R_{EQ} &= 87 + \left[\frac{22(R_x + 10)}{22 + R_x + 10}\right] = 87 + \left[\frac{22R_x + 220}{32 + R_x}\right] \\
(32 + R_x)R_{EQ} &= (32 + R_x)87 + 22R_x + 220 = 3004 + 109R_x \\
32R_{EQ} + R_{EQ}R_x &= 3004 + 109R_x \\
(109 - R_{EQ})R_x &= 32R_{EQ} - 3004 \\
R_x &= \frac{32R_{EQ} - 3004}{109 - R_{EQ}}
\end{aligned}$$

For $R_{EQ} = 100$ kΩ, we have

$$R_x = \frac{(32)(100) - 3004}{109 - 100} = \frac{196}{9} = 21.78 \text{ k}\Omega$$

Problem 2–39. Two 10-kΩ potentiometers (a variable resistor whose value between the two ends is 10 kΩ and between one end and the wiper—the third terminal—can range from 0 Ω to 10 kΩ) are connected as shown in Figure P2–39. What is the range of R_{EQ}?

At the limits of their settings, the two poteniometers are either in series or parallel. These settings represent the maximum and minimum equivalent resistances that the combination can take. When the poteniometers are arranged in parallel, the equivalent resistance is $R_{EQ} = 10 \parallel 10 = 5$ kΩ. When the poteniometers are arranged in series, the equivalent resistance is $R_{EQ} = 10 + 10 = 20$ kΩ. The equivalent resistance ranges between 5 and 20 kΩ.

Problem 2–40. Find the equivalent practical voltage source of the circuit in Figure P2–40.

Perform a source transformation on the voltage source to yield the following circuit:

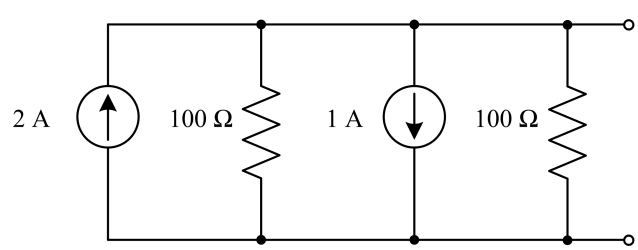

Combine the two current sources in parallel and the two resistors in parallel to yield the following equivalent circuit:

Analysis and Design of Linear Circuits 9th edition Thomas Solutions Manual

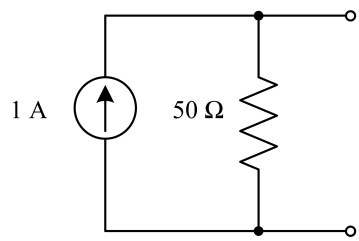

Perform another source transformation to get the equivalent practical voltage source shown below.

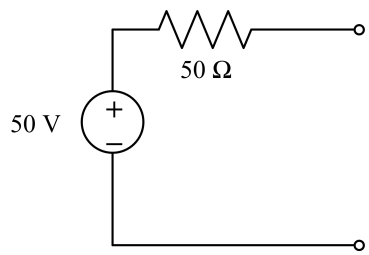

Problem 2–41. Find the equivalent resistance between terminals A and B in Figure P2–41.

Place a voltage source, v_S, between terminals A and B and redraw the circuit as the equivalent circuit shown in the figure below.

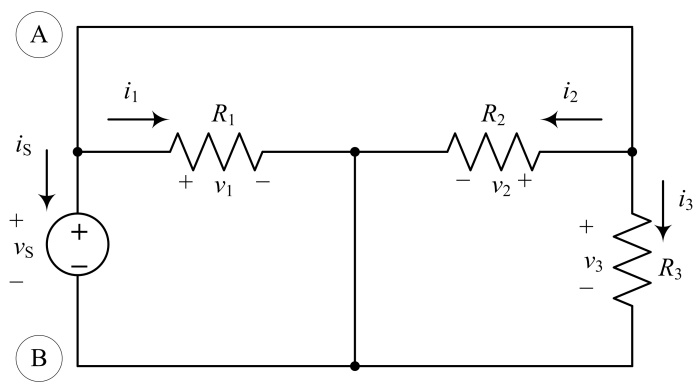

The figure is labeled with currents through and voltages across each of the resistors. Using KVL, we can show that the voltage drop across each resistor is $v_S$and it appears in the direction labeled in the figure. Since the resistors are all equal, the current through each resistor is v_S/R. Applying KCL at the node above the voltage source, we have $-i_S - v_S/R - v_S/R - v_S/R = 0$, which implies $i_S = -3v_S/R$. The equivalent resistance is the ratio of $v_S$to the current flowing into the circuit, which $-i_S$. Therefore, we have

$$R_{EQ} = \frac{v_S}{-i_S} = \frac{v_S}{\frac{3v_S}{R}} = \frac{R}{3}$$

As a simpler solution, the three resistors are connected in parallel, so the equivalent resistance is $R_{EQ} = R \parallel R \parallel R = R/3$.

Problem 2–42. Use voltage division in Figure P2–42 to find v_x, v_y, and v_z. Then show that the sum of these voltages equals the source voltage.

Analysis and Design of Linear Circuits 9th edition Thomas Solutions Manual

Apply the equation for voltage division to solve for each voltage

$$v_x = \left(\frac{R_x}{R_x + R_y + R_z}\right)(v_S) = \left(\frac{2}{2+8+4}\right)(24) = 3.4286\,\text{V}$$

$$v_y = \left(\frac{8}{2+8+4}\right)(24) = 13.7143\,\text{V}$$

$$v_z = \left(\frac{4}{2+8+4}\right)(24) = 6.8571\,\text{V}$$

The sum of the three voltages is $3.4286 + 13.7143 + 6.8571 = 24.00$ V, which matches the voltage source.

Problem 2–43. Use current division in Figure P2–43 to find i_x, i_y, and i_z. Then show that the sum of these currents equals the source current.

Apply the equation for current division to solve for each current

$$i_x = \left(\frac{\frac{1}{R_x}}{\frac{1}{R_x} + \frac{1}{R_y} + \frac{1}{R_z}}\right)(i_S) = \left(\frac{\frac{1}{2}}{\frac{1}{2} + \frac{1}{1} + \frac{1}{1.5}}\right)(3) = 0.6923\,\text{A}$$

$$i_y = \left(\frac{\frac{1}{1}}{\frac{1}{2} + \frac{1}{1} + \frac{1}{1.5}}\right)(3) = 1.3846\,\text{A}$$

$$i_z = \left(\frac{\frac{1}{1.5}}{\frac{1}{2} + \frac{1}{1} + \frac{1}{1.5}}\right)(3) = 0.9231\,\text{A}$$

The sum of the three currents is $0.6923 + 1.3846 + 0.9231 = 3.00$ A, which matches the current source.

Problem 2–44. Find i_x, i_y, and i_z in Figure P2–44.

Combine the 20-Ω and 5-Ω resistors in parallel to get an equivalent resistance of 4 Ω. Combine that result with the 6-Ω resistor in series to get a total equivalent resistance of 10 Ω in the right branch. Apply the two-path current division rule to solve for i_x and i_z.

$$i_x = \frac{10}{15+10}(500) = 200\,\text{mA}$$

$$i_z = \frac{15}{15+10}(500) = 300\,\text{mA}$$

Apply the two-path current division rule again to solve for i_y by dividing i_z

$$i_y = \frac{20}{20+5}(300) = 240\,\text{mA}$$

Problem 2–45. Find v_O in the circuit of Figure P2–45.

The circuit can be treated as a voltage source in series with three resistors, so voltage division applies. The output voltage, v_O, appears across 67% of the 100-kΩ poteniometer or, equivalently, 67 kΩ. The 33-kΩ resistor and the remaining 33% of the potentiometer, or 33 kΩ, are the other two resistors in the circuit. Compute v_O directly as follows:

$$v_O = \frac{67}{33+33+67}(10) = \frac{67}{133}(10) = 5.038\,\text{V}$$

Analysis and Design of Linear Circuits 9th edition Thomas Solutions Manual

Problem 2–46. **(A)** You wish to drive a 1-kΩ load from your car battery as shown in Figure P2–46. The load needs 5 V across it to operate correctly. Where should the wiper on the potentiometer be set (R_x) to obtain the desired output voltage?

The figure below shows an equivalent circuit with the poteniometer split into its two equivalent components.

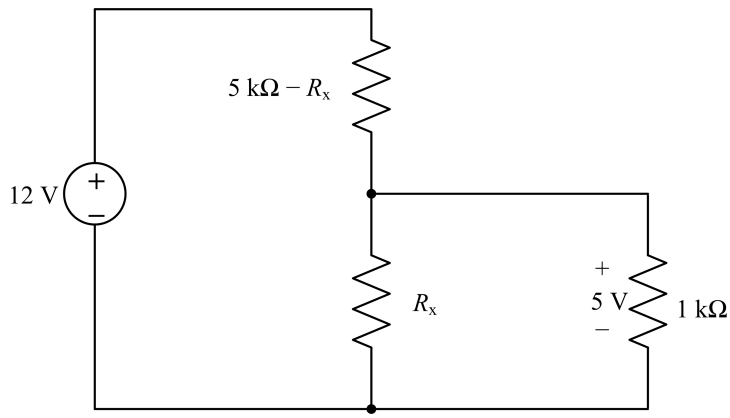

To solve the problem, find an equivalent resistance for the parallel combination of resistors and then apply voltage division to find an expression for R_x. Solve for R_x and select the positive result.

$$R_{EQ} = R_x \parallel 1000 = \frac{1000R_x}{1000 + R_x}$$

$$5\,\text{V} = \frac{R_{EQ}}{5000 - R_x + R_{EQ}}(12\,\text{V})$$

$$5 = \left[\frac{\dfrac{1000R_x}{1000 + R_x}}{5000 - R_x + \dfrac{1000R_x}{1000 + R_x}}\right](12) = \frac{12000R_x}{(5000 - R_x)(1000 + R_x) + 1000R_x}$$

$$1 = \frac{2400R_x}{5 \times 10^6 + 4000R_x - R_x^2 + 1000R_x}$$

$$-R_x^2 + 5000R_x + 5 \times 10^6 = 2400R_x$$

$$R_x^2 - 2600R_x - 5 \times 10^6 = 0$$

$$R_x = -1286.5 \text{ or } 3886.5\,\Omega$$

$$R_x = 3.8865\,\text{k}\Omega$$

Analysis and Design of Linear Circuits 9th edition Thomas Solutions Manual

Problem 2–47. Use current division in the circuit of Figure P2–47 to find R_X so that the output voltage is $v_O = 3$ V. Repeat for $v_O = 5$ V.

If the output voltage is 3 V, then the current flowing through the right branch in the circuit is $i_x = v/R = (3\text{ V})/(10\,\Omega) = 0.3$ A. Note that R_x is in series with the right 10 Ω resistor. Apply the two-path current division rule to solve for R_x.

$$\begin{aligned} 0.3\text{ A} &= \frac{10}{10 + R_x + 10}(1\text{ A}) \\ (20 + R_x)(0.3) &= 10 \\ 20 + R_x &= 33.33 \\ R_x &= 13.33\,\Omega \end{aligned}$$

If the output voltage is 5 V, then the current flowing through the right branch in the circuit is $i_x = v/R = (5\text{ V})/(10\,\Omega) = 0.5$ A. Apply the two-path current division rule to solve for R_x.

$$\begin{aligned} 0.5\text{ A} &= \frac{10}{10 + R_x + 10}(1\text{ A}) \\ (20 + R_x)(0.5) &= 10 \\ 20 + R_x &= 20 \\ R_x &= 0\,\Omega \end{aligned}$$

In the second case, R_x is a short circuit.

Problem 2–48. **(A)** Figure P2–48 shows a voltage bridge circuit, that is, two voltage dividers in parallel with a source v_S. One resistor R_X is variable. The goal is often to "balance" the bridge by making $v_x = 0$ V. Derive an expression for R_X in terms of the other resistors when the bridge is balanced.

Let the node between resistors R_A and R_B have a voltage v_1 and let the node between resistors R_C and R_X have a voltage v_2. The goal is to make v_1 equal v_2 so that v_x is zero. Use voltage division to derive expressions for v_1 and v_2, set those expressions equal, and solve for R_X.

$$\begin{aligned} v_1 &= \frac{R_B}{R_A + R_B}(v_S) \\ v_2 &= \frac{R_X}{R_C + R_X}(v_S) \\ \frac{R_B v_S}{R_A + R_B} &= \frac{R_X v_S}{R_C + R_X} \\ R_B(R_C + R_X) &= R_X(R_A + R_B) \\ R_B R_C + R_B R_X &= R_A R_X + R_B R_X \\ R_X &= \frac{R_B R_C}{R_A} \end{aligned}$$

Problem 2–49. **(E)** Consider the circuit in Figure P2–49. The task is to deliver 25 V to the load. For each of the two interfaces provided, determine the value of R_P or R_S needed to deliver the desired voltage to the load. Which interface results in the least power needed from the source?

Consider the parallel design first. We have the following circuit:

Analysis and Design of Linear Circuits 9th edition Thomas Solutions Manual

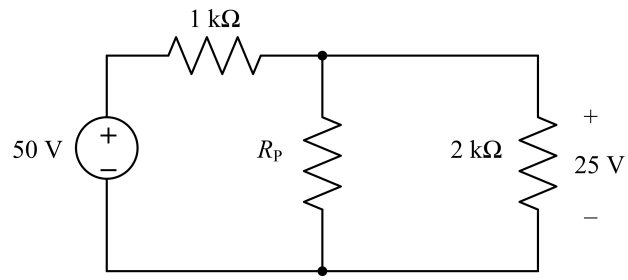

If there is a 25-V drop across the parallel combination of R_P and the 2-kΩ resistor, then the remainder of the voltage, or 25 V, must drop across the 1-kΩ resistor. With equal voltage drops, the parallel combination must have an equivalent resistance to match the other resistor, or 1 kΩ. Two 2-kΩ resistors in parallel are equivalent to a 1-kΩ resistor, so $R_P = 2\,\text{k}\Omega$. In the resulting circuit, the source connects to an equivalent resistance of $1\,\text{k}\Omega + (2\,\text{k}\Omega \parallel 2\,\text{k}\Omega) = 2\,\text{k}\Omega$ and dissipates power $p = v^2/R = (50)^2/(2000) = 1.25$ W.

For the series interface design, we have the following circuit:

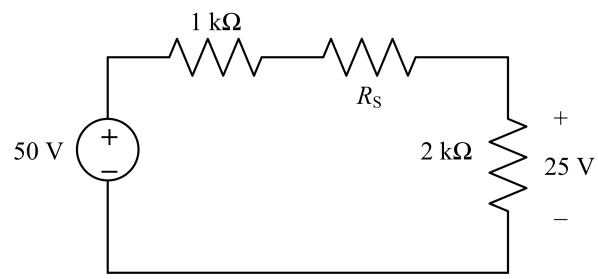

There is a 25-V drop across the 2-kΩ resistor, so the remaining 25 V must drop across the series combination of the 1-kΩ resistor and R_S. To get equal voltage drops, the series combination must match the 2-kΩ resistor, so $R_S = 1\,\text{k}\Omega$. In the resulting circuit, the source connects to an equivalent resistance of $1\,\text{k}\Omega + 1\,\text{k}\Omega + 2\,\text{k}\Omega = 4\,\text{k}\Omega$ and dissipates power $p = v^2/R = (50)^2/(4000) = 0.625$ W. The design with the series interface draws less power from the source than the design with the parallel interface.

Problem 2–50. (D) (CI) Select a value of R_x in the circuit of Figure P2–50 so that $v_L = 4$ V. Validate your answer using Multisim.

Combine the two right 1-kΩ resistors in parallel to get an equivalent resistance of 500 Ω. Voltage v_L appears across the parallel combination, so apply voltage division to solve for R_x.

$$\begin{aligned} v_L &= 4\,\text{V} = \frac{500}{1000 + R_x + 500}(24\,\text{V}) \\ 4(1500 + R_x) &= 12000 \\ 4R_x &= 6000 \\ R_x &= 1500\,\Omega = 1.5\,\text{k}\Omega \end{aligned}$$

The Multisim simulation and results in the figure below verify the solution.

Analysis and Design of Linear Circuits 9th edition Thomas Solutions Manual

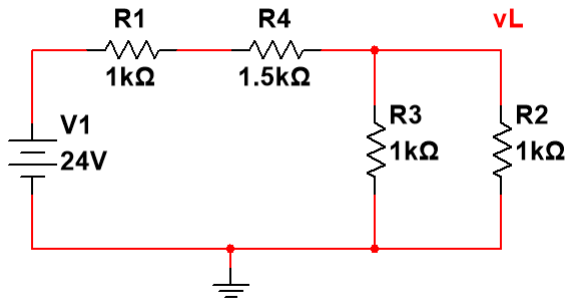

Problem02_70
DC Operating Point Analysis

	Variable	Operating point value
1	V(vl)	4.00000

Problem 2–51. Use circuit reduction to find v_x and i_x in Figure P2–51.

Find v_x by combining the 220-Ω resistor and the right 100-Ω resistor in series to get $R_{EQ1} = 220 + 100 = 320\ \Omega$ and then combine that result in parallel with the left 100-Ω resistor to get a total equivalent resistance of $R_{EQ2} = 100 \parallel 320 = 76.1905\ \Omega$. The voltage v_x appears across this equivalent resistance with a current of 100 mA, so we have $v_x = R_{EQ2}i = (76.1905\,\Omega)(100\,\text{mA}) = 7.61905$ V. To solve for i_x, perform a source transformation to convert the current source in parallel with a 100-Ω resistor into a voltage source $v_S = i_S R = (100\,\text{mA})(100\,\Omega) = 10$ V in series with a 100-Ω resistor. Combine the resulting resistors in series and solve for i_x using Ohm's law, $i_x = v_S/(100+220+100) = (10\,\text{V})/(420\,\Omega) = 23.8095$ mA. There are many other valid approaches to find the desired values.

Problem 2–52. Use circuit reduction to find v_x, i_x, and p_x in Figure P2–52. Repeat using Multisim.

Find p_x first by finding an equivalent resistance for all of the resistors combined. To do so, collapse the circuit from right to left to develop the following expression:

$$R_{EQ} = 3.3 \parallel \{2.2 + [2 \parallel (1+1)]\} = 3.3 \parallel \{2.2 + [2 \parallel 2]\} = 3.3 \parallel \{2.2 + 1\} = 3.3 \parallel 3.2$$

$$R_{EQ} = 1.62462\,\text{k}\Omega$$

Solve for the power $p_x = i^2 R_{EQ} = (300\,\text{mA})^2(1.62462\,\text{k}\Omega) = 146.215$ W.

To solve for v_x, perform a source transformation on the left and combine the three resistors on the right to get the circuit shown below.

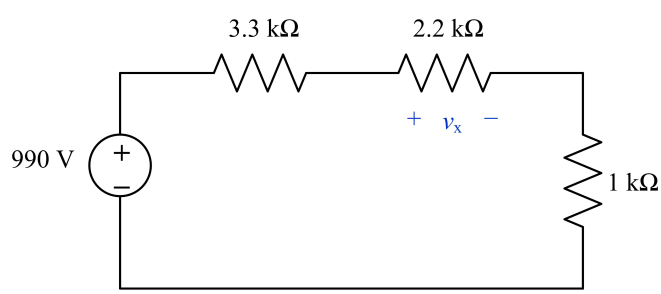

The source transformation yields $v_S = i_S R = (300\,\text{mA})(3.3\,\text{k}\Omega) = 990$ V in series with a 3.3 kΩ resistor. Use voltage division to calculate v_x as follows

$$v_x = \frac{2.2}{3.3 + 2.2 + 1}(990) = 335.077\ \text{V}$$

To find i_x, leave the resistors on the right intact and perform a source transformation as described above. Combine the 3.3-kΩ and 2.2-kΩ resistors in series to yield the circuit shown below.

Analysis and Design of Linear Circuits 9th edition Thomas Solutions Manual

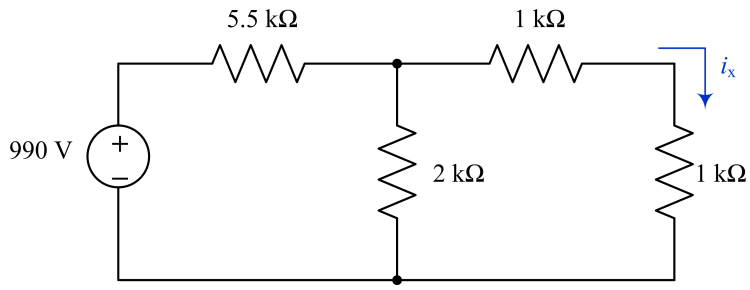

Perform another source transformation to get a 180-mA current source in parallel with a 5.5-kΩ resistor. In addition, combine the two 1-kΩ resistors in series, since i_x flows through both of them. The resulting circuit is shown in the figure below.

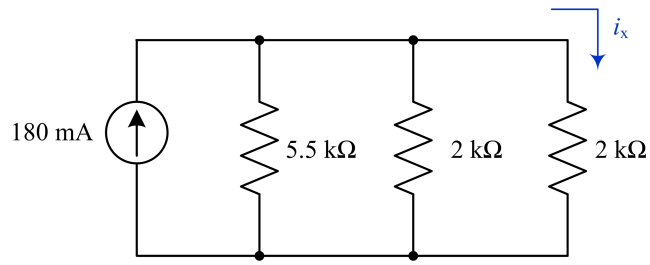

Now combine the 5.5-kΩ and 2-kΩ resistors in parallel to get the circuit shown below.

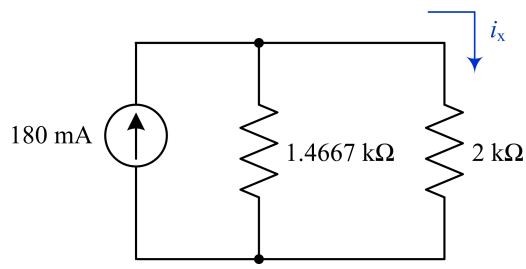

Apply the two-path current division rule to calculate i_x as follows

$$i_x = \frac{1.4667}{1.4667 + 2}(180\,\text{mA}) = 76.1538\,\text{mA}$$

The following Multisim circuit and the corresponding results confirm the solution presented above.

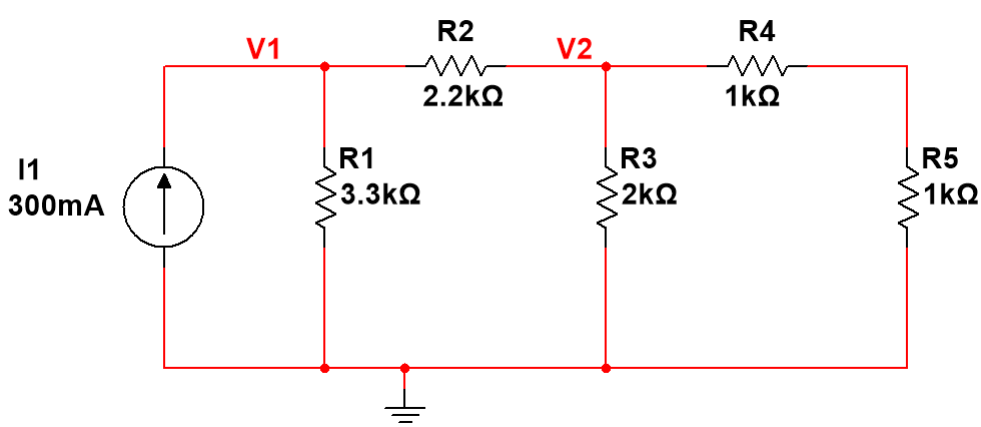

Analysis and Design of Linear Circuits 9th edition Thomas Solutions Manual

Problem02_73
DC Operating Point Analysis

	Variable	Operating point value
1	V(v1)-V(v2)	335.07692
2	P(I1)	-146.21538
3	I(R4)	76.15385 m

In the circuit simulation, voltage v_x appears across R_2 and has a value $v_x = v_1 - v_2 = 335.07692$ V. Current i_x flows through R_4 and has a value $i_x = 76.15385$ mA. The power provided by the current source is $p_x = -146.21538$ W. Note that the negative power is consistent with a power source.

Problem 2–53. Use circuit reduction to find v_x, i_x, and p_x in Figure P2–53.

To find p_x, collapse the resistors working from right to left. The two 1-kΩ resistors are in parallel and combine to yield a 500-Ω resistor. That equivalent resistance is in series with the 1.5-kΩ resistor, which combine to yield a 2-kΩ resistor. That equivalent resistance is in parallel with the 2-kΩ resistor, which yields a 1-kΩ resistor. That resistor is in series with the 5-kΩ resistor, which yields a total equivalent resistance of 6 kΩ. The following expression summarizes these calculations, where all resistances are in kΩ.

$$R_{EQ} = 5 + \{2 \parallel [1.5 + (1 \parallel 1)]\} = 5 + \{2 \parallel [1.5 + 0.5]\} = 5 + \{2 \parallel 2\} = 5 + 1 = 6\,\text{k}\Omega$$

Compute the power as

$$p_x = \frac{v^2}{R_{EQ}} = \frac{(24\,\text{V})^2}{6\,\text{k}\Omega} = 96\,\text{mW}$$

To find i_x, perform a source transformation on the left side and combine the three resistors on the right side as described above. The resulting circuit is shown below.

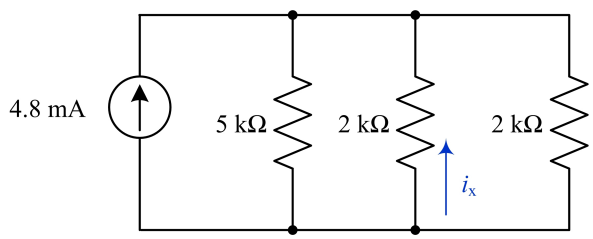

Apply current division to solve for i_x as follows, noting the direction of i_x is opposite that of the source

$$i_x = \frac{\frac{1}{2}}{\frac{1}{5} + \frac{1}{2} + \frac{1}{2}}(-4.8\,\text{mA}) = \frac{3}{2+3+3}(-4.8\,\text{mA}) = -2.0\,\text{mA}$$

To find v_x, start with the original circuit and perform a source transformation as above, but leave the three right resistors intact for now. After the source transformation, combine the 5-kΩ and 2-kΩ resistors in parallel to get the circuit shown below.

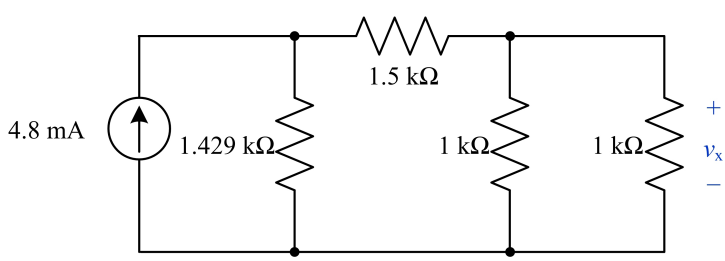

Perform another source transformation and combine the two 1-kΩ resistors in parallel to get the circuit shown below.

Analysis and Design of Linear Circuits 9th edition Thomas Solutions Manual

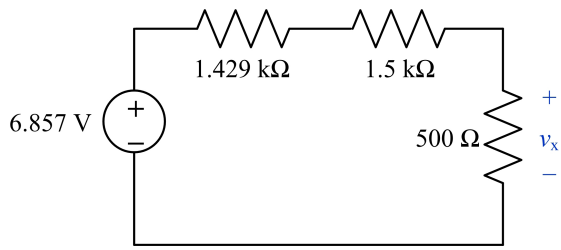

Note that combining the two 1-kΩ resistors in parallel does not disrupt v_x, since the resistors share the same voltage. Apply voltage division to solve for v_x as follows:

$$v_x = \frac{0.5}{1.429 + 1.5 + 0.5}(6.857\text{ V}) = 1.0\text{ V}$$

Problem 2–54. Use circuit reduction to find v_x and i_x in Figure P2–54.

To find i_x, combine the two right resistors in series and perform a source transformation to get the circuit shown below.

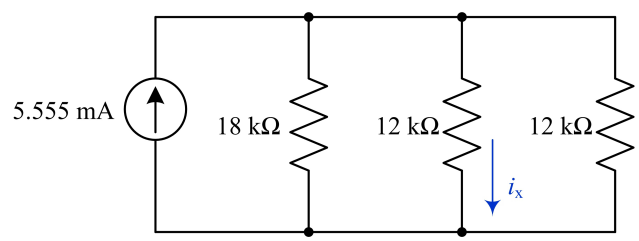

Apply current division to find i_x as follows

$$i_x = \frac{\frac{1}{12}}{\frac{1}{18} + \frac{1}{12} + \frac{1}{12}}(5.555\text{ mA}) = 2.0833\text{ mA}$$

To find v_x, start with the original circuit and perform a source transformation to get the circuit below.

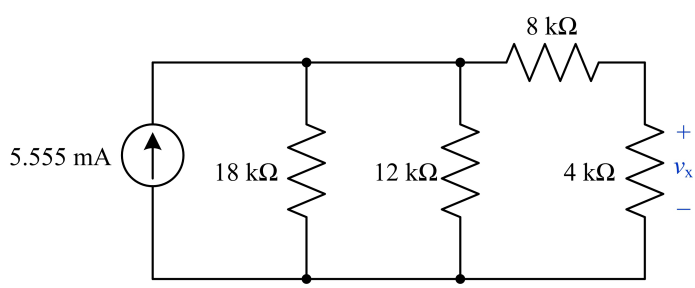

Combine the 18-kΩ and 12-kΩ resistors in parallel to get an equivalent resistance of 7.2 kΩ. Perform another source transformation to get the circuit shown below.

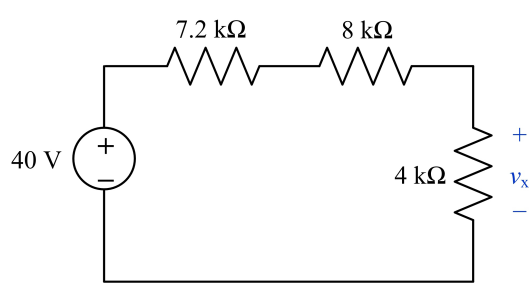

Analysis and Design of Linear Circuits 9th edition Thomas Solutions Manual

Apply voltage division to solve for v_x as follows:

$$v_x = \frac{4}{7.2 + 8 + 4}(40\text{ V}) = 8.333\text{ V}$$

Problem 2–55. Use source transformation to find i_x in Figure P2–55.

Perform a source transformation on the current source in parallel with the 330-Ω resistor to get the circuit shown below.

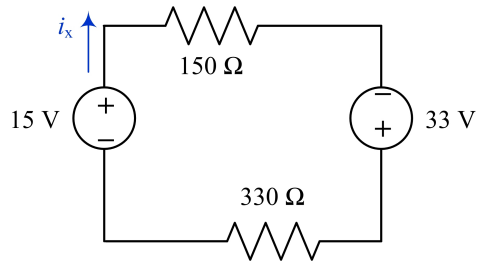

All of the elements in the circuit are in series, so we can combine the two voltage sources and the two resistors to get the equivalent circuit shown below.

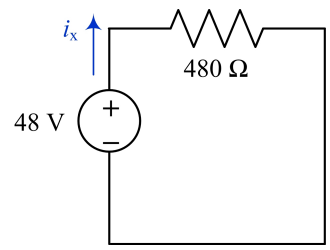

Throughout the process, we have not disrupted i_x, so we can calculate $i_x = (48\text{ V})/(480\,\Omega) = 100$ mA.

Problem 2–56. Select a value for R_x so that $i_x = 0$ A in Figure P2–56.

Perform a source transformation on both voltage sources to get the equivalent circuit shown below.

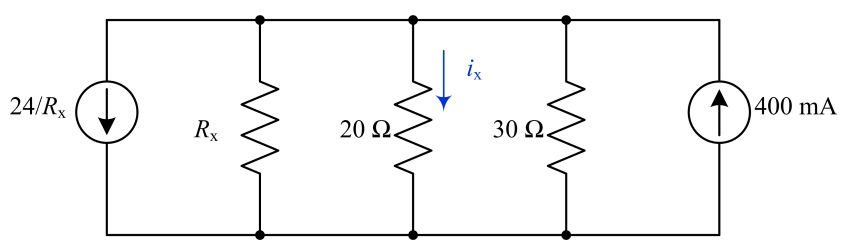

Note the negative voltage source influences the direction of the current in the left transformation. In the equivalent circuit, all three resistors are in parallel and, therefore, share the same voltage. If $i_x = 0$ A, then the voltage drop across each resistor must be zero and no current flows through them. Therefore, all of the current from one source flows through the other source. Solve for R_x by setting the values of the current sources equal to each other as follows:

$$\frac{24\text{ V}}{R_x} = 400\text{ mA}$$

$$R_x = 60\,\Omega$$

Problem 2–57. **(CI)** The current through R_L in Figure P2–57 is 200 mA. Use source transformations to find R_L. Validate your answer using Multisim.

Perform a source transformation on the voltage source to get a 2-A current source in parallel with a 100-Ω resistor as shown below.

Analysis and Design of Linear Circuits 9th edition Thomas Solutions Manual

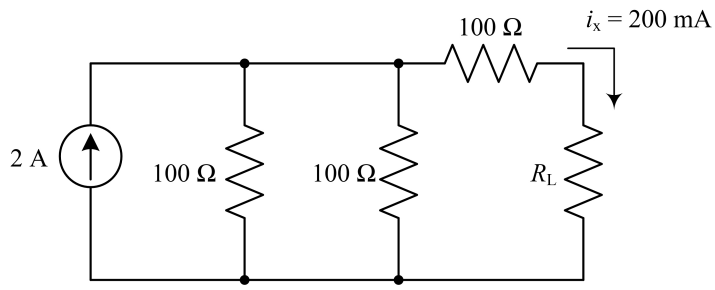

Combine the resulting two 100-Ω resistors in parallel to get a 50-Ω resistor. Perform another source transformation to get a 100-V source in series with a 50-Ω resistor, which is also in series with the other 100-Ω resistor and R_L, as shown below.

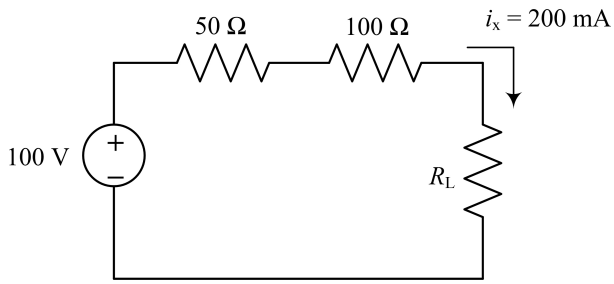

The 100-V source produces 200 mA through the circuit, so the equivalent resistance is $R_{EQ} = (100\,\text{V})/(200\,\text{mA}) = 500\ \Omega$. The equivalent resistance is also the sum of the three resistors in series $R_{EQ} = 50 + 100 + R_L$, so we can solve for $R_L = 350\ \Omega$.

The Multisim circuit and the corresponding results shown below confirm the solution.

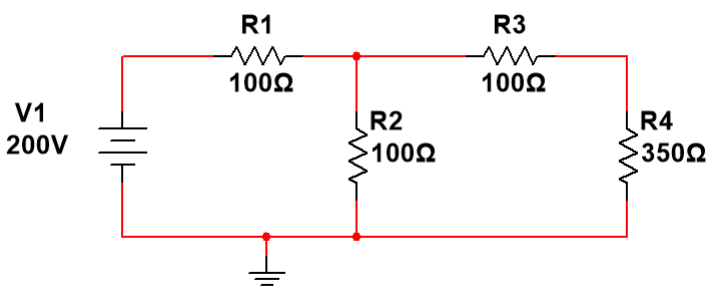

Problem02_80
DC Operating Point Analysis

	Variable	Operating point value
1	I(R4)	200.00000 m

Analysis and Design of Linear Circuits 9th edition Thomas Solutions Manual

Problem 2–58. (CI) The box in the circuit in Figure P2–58 is a resistor, R_X, whose value can be anywhere between 100 Ω and 1 MΩ.

(a) Use circuit reduction to find the range of values of v_x.

Perform a source transformation to get a 5-mA current source in parallel with a 10-kΩ resistor as shown in the circuit below.

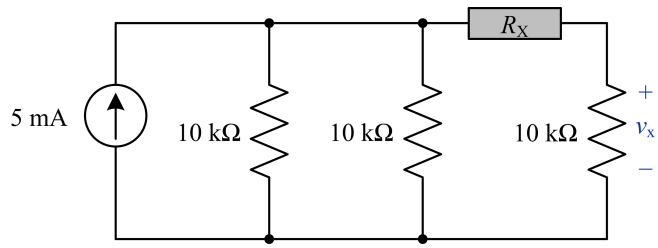

Combine the two 10-kΩ resistors in parallel to get a 5-kΩ resistor in parallel with the current source. Perform another source transformation to get a 25-V voltage source in series with a 5-kΩ resistor, which are also in series with the variable resistor, R_X, and the right 10-kΩ resistor. The resulting circuit is shown below.

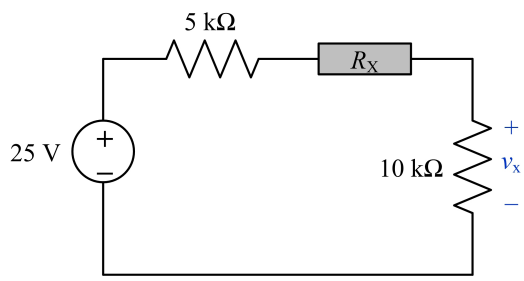

Apply voltage division, once with each extreme value of the variable resistor, to find the range of values for v_x.

$$v_{x,\text{Min}} = \frac{10}{5 + 1000 + 10}(25\text{ V}) = 246.305\text{ mV}$$

$$v_{x,\text{Max}} = \frac{10}{5 + 0.1 + 10}(25\text{ V}) = 16.5563\text{ V}$$

(b) Use Multisim's "Parameter Sweep" analysis to show the variation of the output v_x with respect to R_X.

The Multisim circuit and the corresponding results shown below provide the solution.

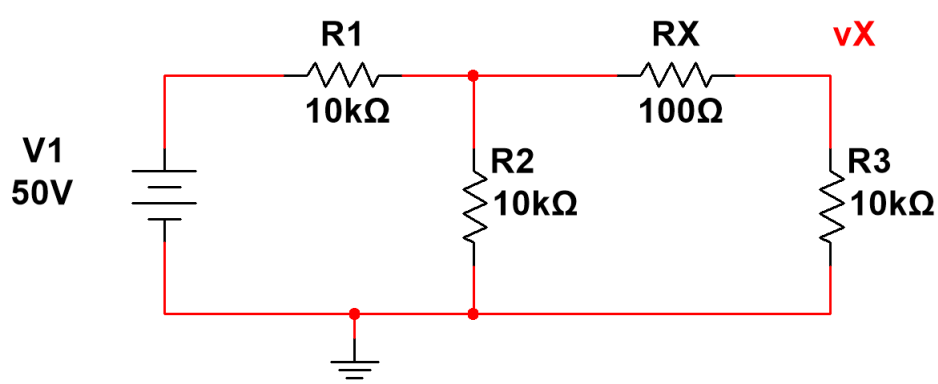

Analysis and Design of Linear Circuits 9th edition Thomas Solutions Manual

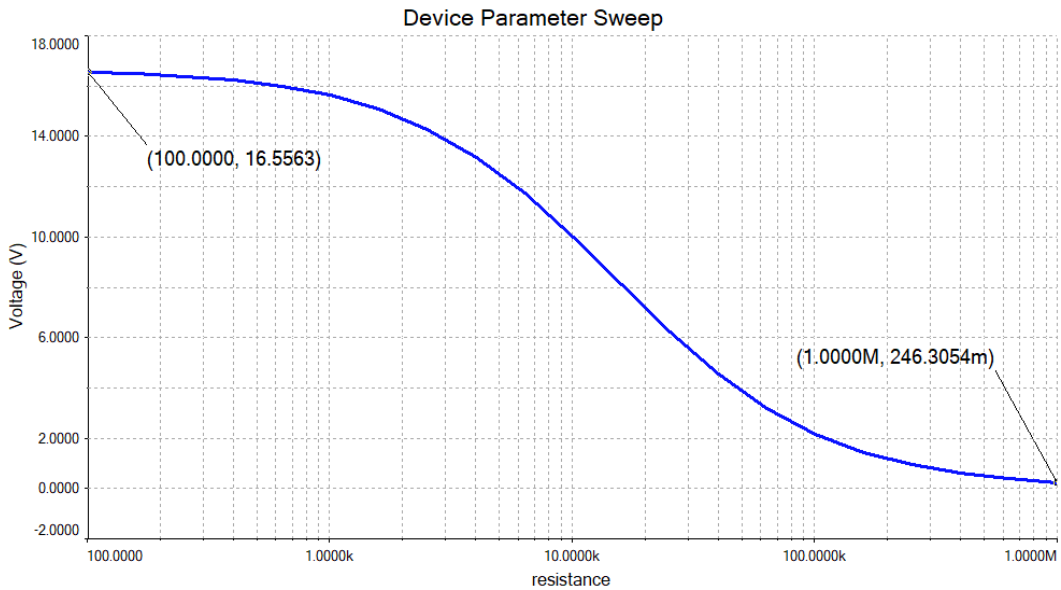

The results confirm the calculations in part (a).

Problem 2–59. Use Multisim to find all the currents and voltages in the circuit of Figure P2–54.

The Multisim circuit and the corresponding results shown below provide the solution.

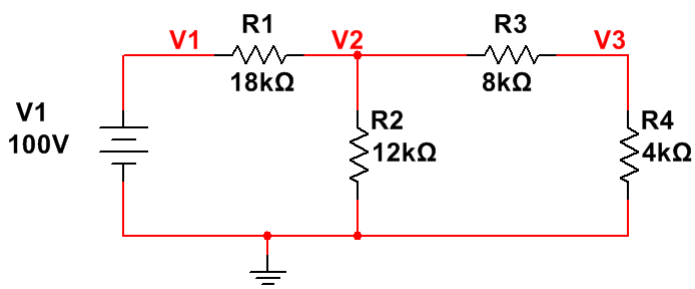

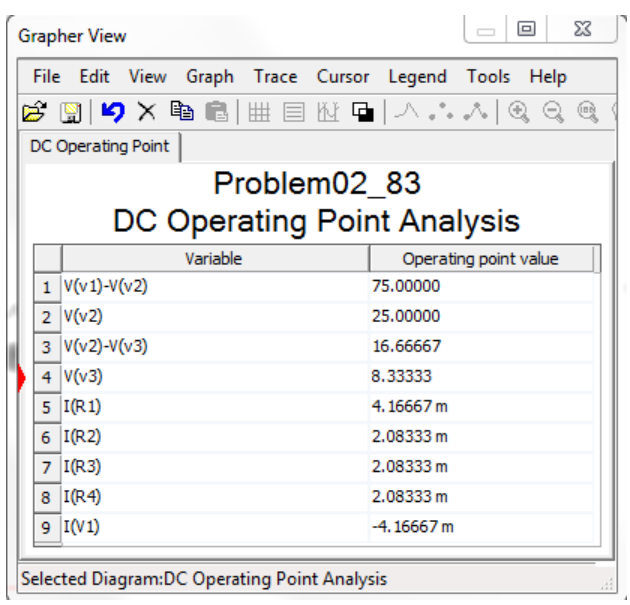

	Variable	Operating point value
1	V(v1)-V(v2)	75.00000
2	V(v2)	25.00000
3	V(v2)-V(v3)	16.66667
4	V(v3)	8.33333
5	I(R1)	4.16667 m
6	I(R2)	2.08333 m
7	I(R3)	2.08333 m
8	I(R4)	2.08333 m
9	I(V1)	-4.16667 m

Analysis and Design of Linear Circuits 9th edition Thomas Solutions Manual

As found in Problem 2–54, the solutions are consistent with v_x = V(v3) = 8.33333 V and i_x = I(R2) = 2.08333 mA.

Problem 2–60. Use Multisim to find all the currents and voltages in the circuit of Figure P2–55.
The Multisim circuit and the corresponding results shown below provide the solution.

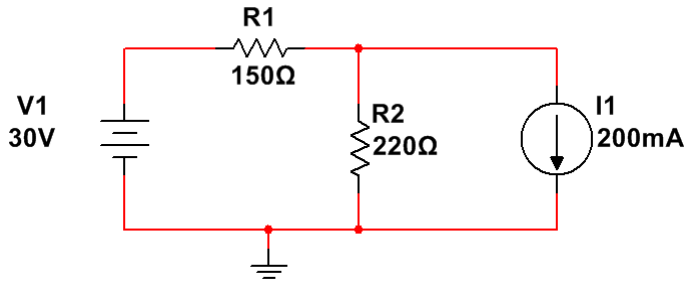

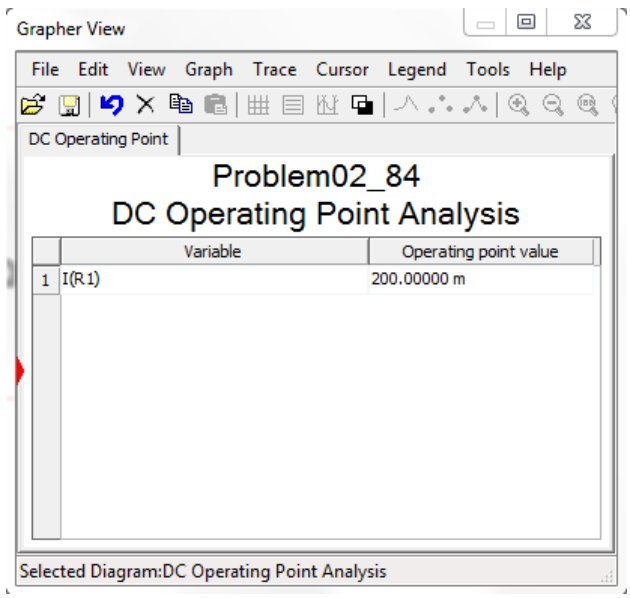

As found in Problem 2–55, the solutions are consistent with i_x = I(R1) = 200 mA.

Analysis and Design of Linear Circuits 9th edition Thomas Solutions Manual

Problem 2–61. Use Multisim to find i_x, v_x, and p_x in the circuit of Figure P2–52.

The Multisim circuit and the corresponding results shown below provide the solution.

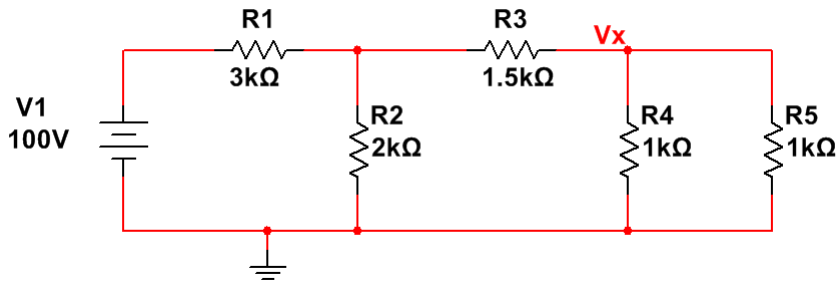

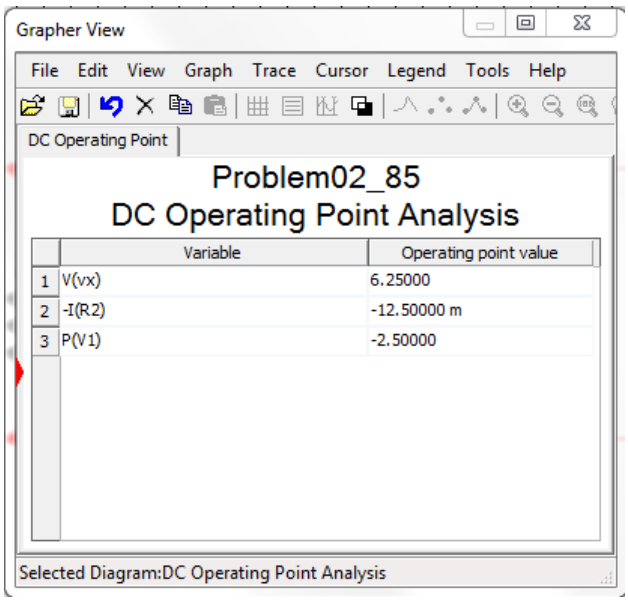

	Variable	Operating point value
1	V(vx)	6.25000
2	-I(R2)	-12.50000 m
3	P(V1)	-2.50000

As found in Problem 2–52, the solutions are consistent with v_x = V(vx) = 6.25 V, i_x = -I(R2) = -12.5 mA, and p_x = P(V1) = -2.5 W.

Analysis and Design of Linear Circuits 9th edition Thomas Solutions Manual

Problem 2–62. Use Multisim to show the power balance in the circuit of P2–51, that is, that the sum of the power in the circuit equals zero.

The Multisim circuit and the corresponding results shown below provide the solution.

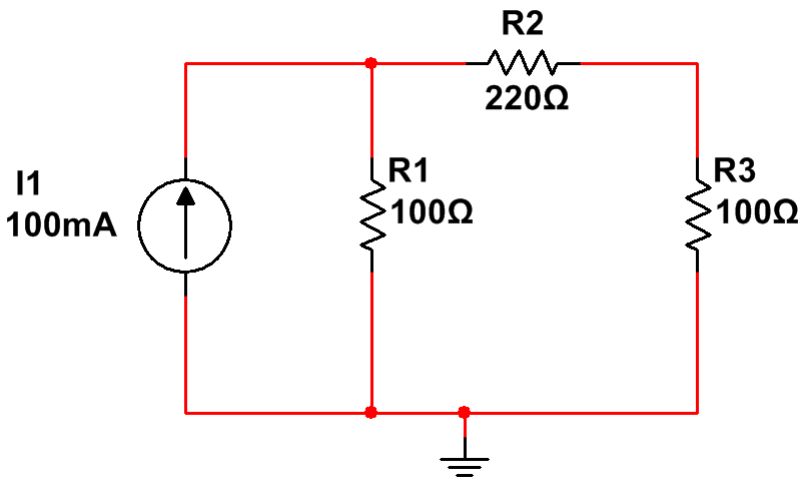

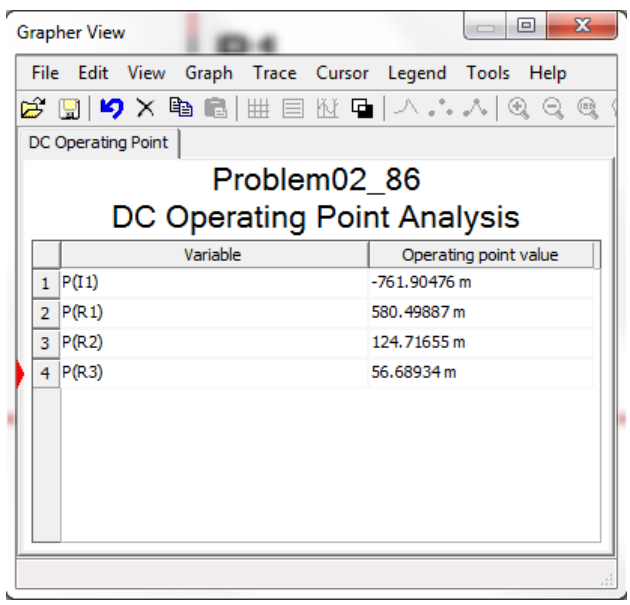

	Variable	Operating point value
1	P(I1)	-761.90476 m
2	P(R1)	580.49887 m
3	P(R2)	124.71655 m
4	P(R3)	56.68934 m

Sum the power values in the results to find $-761.90476 + 580.49887 + 124.71655 + 56.68934 = 0$ mW, as expected.

Problem 2–63. **(CI)** Consider the circuit of Figure P2–63.

(a) Use MATLAB to find all of the voltages and currents in the circuit and find the power provided by the source.

Label the source as v_1 with current i_1 and the resistors from left to right as R_2 to R_7 with corresponding voltages and currents following the passive sign convention. The labeled circuit is shown below.

Analysis and Design of Linear Circuits 9th edition Thomas Solutions Manual

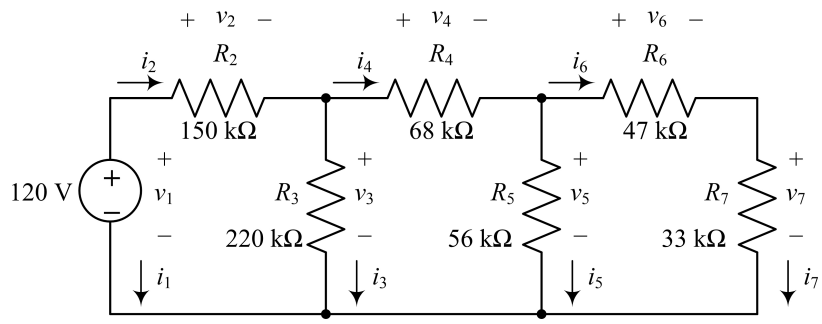

Write the following element and connection equations by applying Ohm's law, KVL, and KCL:

$$v_1 = 120\,\text{V} \qquad -v_1 + v_2 + v_3 = 0$$

$$v_2 = 150000\,i_2 \qquad -v_3 + v_4 + v_5 = 0$$

$$v_3 = 220000\,i_3 \qquad -v_5 + v_6 + v_7 = 0$$

$$v_4 = 68000\,i_4 \qquad i_1 + i_2 = 0$$

$$v_5 = 56000\,i_5 \qquad -i_2 + i_3 + i_4 = 0$$

$$v_6 = 47000\,i_6 \qquad -i_4 + i_5 + i_6 = 0$$

$$v_7 = 33000\,i_7 \qquad -i_6 + i_7 = 0$$

Using a matrix approach, define a vector of variables as

$$\mathbf{x} = \left[v_1\ v_2\ v_3\ v_4\ v_5\ v_6\ v_7\ i_1\ i_2\ i_3\ i_4\ i_5\ i_6\ i_7\right]^{\mathrm{T}}$$

and write the equations in matrix form as follows.

$$\mathbf{A}\,\mathbf{x} = \mathbf{B}$$

The following MATLAB code provides the solution.

```
A = [1 0 0 0 0 0 0 0 0 0 0 0 0 0;
     0 1 0 0 0 0 0 0 -150000 0 0 0 0 0;
     0 0 1 0 0 0 0 0 0 -220000 0 0 0 0;
     0 0 0 1 0 0 0 0 0 0 -68000 0 0 0;
     0 0 0 0 1 0 0 0 0 0 0 -56000 0 0;
     0 0 0 0 0 1 0 0 0 0 0 0 -47000 0;
     0 0 0 0 0 0 1 0 0 0 0 0 0 -33000;
     -1 1 1 0 0 0 0 0 0 0 0 0 0 0;
     0 0 -1 1 1 0 0 0 0 0 0 0 0 0;
     0 0 0 0 -1 1 1 0 0 0 0 0 0 0;
     0 0 0 0 0 0 0 1 1 0 0 0 0 0;
     0 0 0 0 0 0 0 0 -1 1 1 0 0 0;
     0 0 0 0 0 0 0 0 0 0 -1 1 1 0;
     0 0 0 0 0 0 0 0 0 0 0 0 -1 1;
     ];
B = [120 0 0 0 0 0 0 0 0 0 0 0 0 0]';
x = A\B
```

The corresponding MATLAB output is shown below.

Analysis and Design of Linear Circuits 9th edition Thomas Solutions Manual

```
x =
   120.0000e+000
    82.1192e+000
    37.8808e+000
    25.5188e+000
    12.3620e+000
     7.2627e+000
     5.0993e+000
  -547.4614e-006
   547.4614e-006
   172.1854e-006
   375.2759e-006
   220.7506e-006
   154.5254e-006
   154.5254e-006
```

(b) Use MATLAB to find the input resistance that the source sees, R_{IN}.

The input resistance is the ratio of the source voltage to the source current. Using the results computed in part (a), the following MATLAB code provides the solution:

```
vSource = x(1)
iSource = -x(8)
Rin = vSource/iSource
```

The corresponding MATLAB output is shown below.

```
vSource = 120.0000e+000
iSource = 547.4614e-006
Rin = 219.1935e+003
```


Analysis and Design of Linear Circuits 9th edition Thomas Solutions Manual

Problem 2–64. (CI) Consider the circuit of Figure P2–63 above.

(a) Use Multisim to find all of the voltages, currents and power used or provided.

The Multisim circuit and the corresponding results shown below provide the solution.

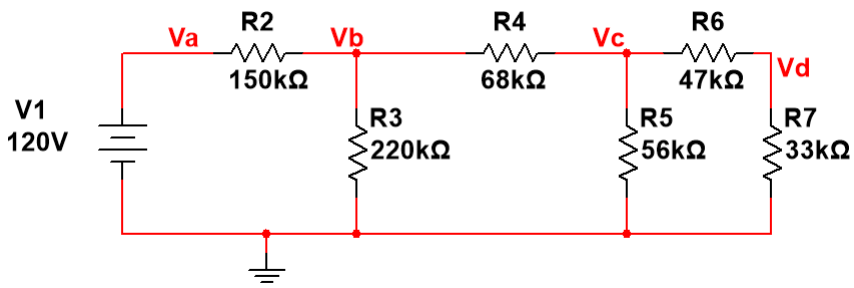

Problem02_80
DC Operating Point Analysis

	Variable	Operating point value
1	I(R2)	547.46138 u
2	I(R3)	172.18542 u
3	I(R4)	375.27592 u
4	I(R5)	220.75053 u
5	I(R6)	154.52538 u
6	I(R7)	154.52537 u
7	I(V1)	-547.46150 u
8	P(R2)	44.95709 m
9	P(R3)	6.52252 m
10	P(R4)	9.57658 m
11	P(R5)	2.72892 m
12	P(R6)	1.12227 m
13	P(R7)	787.97698 u
14	P(V1)	-65.69538 m
15	P(V1)+P(R2)+P(R3)+P(R4)+P(R5)+P(R6)+P(R7)	-16.01378 n
16	V(va)	120.00000
17	V(va)-V(vb)	82.11921
18	V(va)/I(R2)	219.19354 k
19	V(vb)	37.88079
20	V(vb)-V(vc)	25.51876
21	V(vc)	12.36203
22	V(vc)-V(vd)	7.26269
23	V(vd)	5.09934

(b) Verify that the sum of all power in the circuit is zero.

The voltage and current values match those found in Problem 2–63. Sum the power values in the results to find $44.95709+6.52252+9.57658+2.72892+1.12227+0.78797698-65.69538 = 0$ mW, as expected. In addition, the Multisim output shown in part (a) includes an expression for the sum of power, which equals a value very close to zero.

(c) Use Multisim to find the input resistance the the source see, R_{IN}.

The input resistance is the ratio of the source voltage to the source current. Using the results computed in part (a), we have $R_{\text{IN}} = (120\,\text{V})/(547.46138\,\mu\text{A}) = 219.194\,\text{k}\Omega$. In addition, the Multisim output shown in part (a) includes an expression for the input resistance, which matches the value calculated above.

Analysis and Design of Linear Circuits 9th edition Thomas Solutions Manual

Problem 2–65. Nonlinear Device Characteristics **(A)**

The circuit in Figure P2–65 is a parallel combination of a 75-Ω linear resistor and a varistor whose i-v characteristic is $i_V = 2.6 \times 10^{-5} v^3$. For a small voltage, the varistor current is quite small compared to the resistor current. For large voltages, the varistor dominates because its current increases more rapidly with voltage.

(a) Plot the i-v characteristic of the parallel combination.

For a given voltage v, the current through the 75-Ω resistor is $i_1 = v/75$ and the current through the varistor is $i_V = 2.6 \times 10^{-5} v^3$. The total current is $i = i_1 + i_V$. The following MATLAB code plots the i-v characteristic.

```
% Set the range of voltages to plot
v = -200:1:200;
% Compute the current through the resistor
iR = v/75;
% Compute the current through the varistor
iV = 2.6e-5*v.^3;
% Sum the two path currents to get the total current
iTotal = iR + iV;
% Plot the i-v characteristic
plot(v,iTotal,'b','LineWidth',3)
xlabel('Voltage (V)')
ylabel('Current (A)')
grid on
```

The corresponding MATLAB output is shown below.

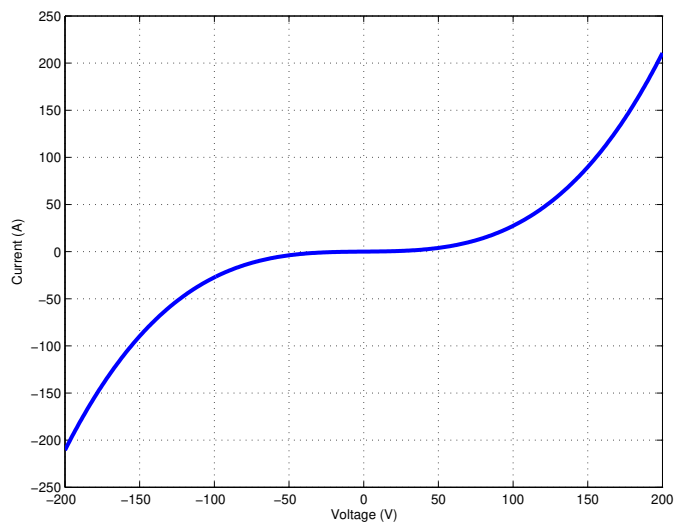

(b) State whether the parallel combination is linear or nonlinear, active or passive, and bilateral or nonbilateral.

The parallel combination is nonlinear based on the curved shape of the i-v characteristic. The combination is passive because the power is always positive, which means it is absorbing power. The combination is bilateral because the i-v characteristic has odd symmetry.

(c) Find the range of voltages over which the resistor current is at least 10 times as large as the varistor current.

Analysis and Design of Linear Circuits 9th edition Thomas Solutions Manual

Solve the following expression for a range of voltages.

$$i_1 \geq 10 i_V$$

$$\frac{v}{75} \geq 10\left(2.6 \times 10^{-5} v^3\right)$$

$$v \geq 0.0195 v^3$$

$$v^2 \leq 51.2821$$

$$|v| \leq 7.16115 \text{ V}$$

(d) Find the range of voltages over which the varistor current is at least 10 times as large as the resistor current.

Solve the following expression for a range of voltages.

$$i_V \geq 10 i_1$$

$$2.6 \times 10^{-5} v^3 \geq 10\left(\frac{v}{75}\right)$$

$$v^2 \geq 5128.21$$

$$|v| \geq 71.6115 \text{ V}$$

Problem 2–66. Center Tapped Voltage Divider **(A)**

Figure P2–66 shows a voltage divider with the center tap connected to ground. Derive equations relating v_A and v_B to v_S, R_1, and R_2.

Using the passive sign convention and KCL, we have $i_S = -i_A = i_B$. Calculate the magnitude of the current by combining the resistors in series and using Ohm's law.

$$i_A = \frac{v_S}{R_1 + R_2}$$

Apply Ohm's law to each resistor to find v_A and v_B

$$v_A = i_A R_1 = \frac{R_1 v_S}{R_1 + R_2}$$

$$v_B = i_B R_2 = \frac{-R_2 v_S}{R_1 + R_2}$$

Problem 2–67. Thermocouple Alarm Sensor **(D)**

A type-K thermocouple produces a voltage that is proportional to temperature. The characteristic of a type-K thermocouple is shown in Figure P2–67(a). In an application, this transducer is used to detect when the temperature reaches 1250 °C and then to cause a safety shutoff to trip and stop an operation. The safety shutoff can be modeled by a 5-kΩ input resistance, while the transducer can be modeled by a variable voltage source, v(T), in series with a resistance of 33 Ω to account for the transducer's wires and internal resistance as shown in Figure P2–67(b). The safety shutoff will trip when exactly 10 mV are applied. Select an appropriate resistance R that will cause the safety shutoff to trip at exactly 1250 °C.

At a temperature of T = 1250 °C, a type-K thermocouple has an output voltage of v(T) = 50 mV. To trip the safety shutoff, the voltage v_L must be 10 mV and this voltage appears across both the 5-kΩ resistor and the design resistor R. Using Ohm's law, the 5-kΩ resistor has a current of $i_{SS} = (10\,\text{mV})/(5\,\text{k}\Omega) = 2\,\mu\text{A}$. Using KVL, the 33-Ω resistor must

Analysis and Design of Linear Circuits 9th edition Thomas Solutions Manual

have a voltage drop of $50 - 10 = 40$ mV and the current through the resistor is $i = (40\,\text{mV})/(33\,\Omega) = 1.21212\,\text{mA}$. Applying KCL, the current through the design resistor is $i_R = 1.21212\,\text{mA} - 2\,\mu\text{A} = 1.21012\,\text{mA}$. Using Ohm's law, the design resistance is $R = (10\,\text{mV})/(1.21012\,\text{mA}) = 8.26363\,\Omega$. This resistor value must be set accurately for the safety shutoff circuit to function correctly. A poteniometer would be a good choice for a simple design. A more robust design would use a feedback circuit to regulate the safety shutoff.

Problem 2–68. Active Transducer **(A)**

Figure P2–68 shows an active transducer whose resistance $R(V_T)$ varies with the transducer voltage V_T as $R(V_T) = 0.5V_T^2 + 1$. The transducer supplies a current to a 12-Ω load. At what voltage will the load current equal 100 mA?

The resistors are in series, so $R_{EQ} = R(V_T) + 12\,\Omega$. Apply Ohm's law to find an expression for i_L in terms of V_T and set $i_L = 100$ mA.

$$i_L = 0.1 = \frac{V_T}{R_{EQ}} = \frac{V_T}{R(V_T) + 12} = \frac{V_T}{0.5V_T^2 + 1 + 12} = \frac{V_T}{0.5V_T^2 + 13}$$

$$(0.1)(0.5V_T^2 + 13) = V_T$$

$$0.05V_T^2 + 1.3 = V_T$$

$$V_T^2 - 20V_T + 26 = 0$$

$$V_T = 1.3977\,\text{V} \quad \text{or} \quad 18.6023\,\text{V}$$

Problem 2–69. Interface Circuit Choice **(CI)(E)**

You have a practical current source that can be modeled as a 10-mA ideal source in parallel with a 1-kΩ source resistor. You need to use your source to drive a 1-kΩ load that requires exactly 2.5 V across it. Two solutions are provided to you as shown in Figure P2–69. Validate that both meet the requirement then select the best solution and give the reason for your choice. Consider part count, standard parts, accuracy of meeting the specification, power consumed by the source, etc. Validate your results using Multisim.

In the circuit with Interface #1, combine all three resistors in parallel to determine the equivalent resistance as $R_{EQ} = 1000 \parallel 500 \parallel 1000 = 250\,\Omega$. Compute the voltage across the equivalent resistance as $v = (250\,\Omega)(10\,\text{mA}) = 2.5$ V, which meets the specification.

In the circuit with Interface #2, apply current division to find the current through the 1-kΩ load resistor.

$$i_L = \frac{1000}{1000 + 2000 + 1000}(10\,\text{mA}) = 2.5\,\text{mA}$$

Compute the output voltage as $v = (1\,\text{k}\Omega)(2.5\,\text{mA}) = 2.5$ V, which meets the specification.

Both circuits exactly meet the specification. In addition, both interface designs use a single, non-standard resistor value when considering resistors at the ±10% tolerance level. With Interface #1, the source experiences an equivalent resistance of 250 Ω and provides $p_S = i_S^2 R_{EQ} = (0.0001)(250) = 25$ mW of power. With Interface #2, the source experiences an equivalent resistance of 750 Ω and provides $p_s = (0.0001)(750) = 75$ mW. If we want to minimize the power provided by the source, Interface #1 is a better choice, since all other factors are equal.

The Multisim circuits and the corresponding results shown below verify the solution.

Analysis and Design of Linear Circuits 9th edition Thomas Solutions Manual

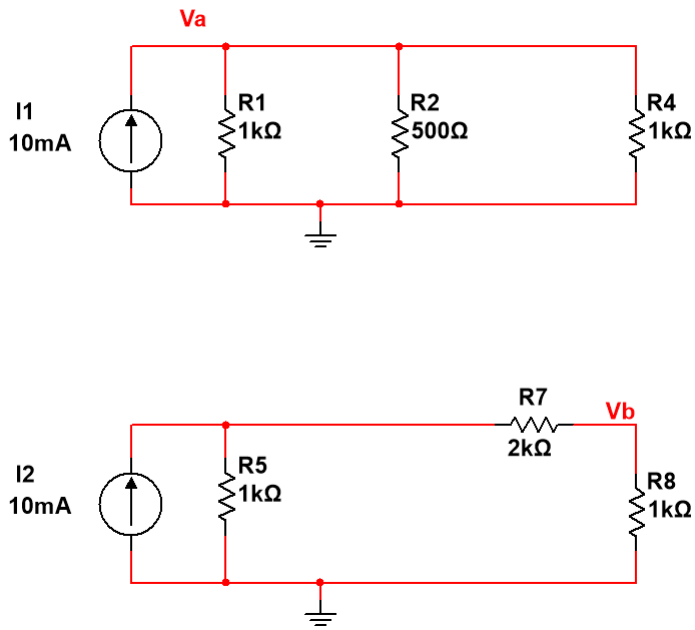

Problem02_96
DC Operating Point Analysis

	Variable	Operating point value
1	V(va)	2.50000
2	V(vb)	2.50000
3	P(I1)	-25.00000 m
4	P(I2)	-75.00000 m

Problem 2–70. Programmable Voltage Divider **(A)**

Figure P2–70 shows a programmable voltage divider in which digital inputs b_0 and b_1 control complementary analog switches connecting a multitap voltage divider to the analog output v_O. The switch positions in the figure apply when digital inputs are low. When inputs go high the switch positions reverse. Find the analog output voltage for $(b_1, b_0) = (0, 0)$, $(0, 1)$, $(1, 0)$, and $(1, 1)$ when $V_{REF} = 12$ V.

There are four equal resistors in series with a voltage source, so each drops one quarter of the total voltage, or 3 V in this case. As we cycle through the four combinations of the digital inputs, the switches connect the output voltage to be across zero, one, two, or three resistors, in that order. The output voltages are therefore 0 V, 3 V, 6 V, and 9 V. The following table summarizes the results.

b_1	b_0	v_O (V)
0	0	0
0	1	3
1	0	6
1	1	9

Analysis and Design of Linear Circuits 9th edition Thomas Solutions Manual

Problem 2–71. Analog Voltmeter Design **(A, D, E)**

Figure P2–71(a) shows a voltmeter circuit consisting of a D'Arsonval meter, two series resistors, and a two-position selector switch. A current of $I_{FS} = 400\ \mu A$ produces full-scale deflection of the D'Arsonval meter, whose internal resistance is $R_M = 25\ \Omega$.

(a) **(D)** Select the series resistances R_1 and R_2 so that a voltage $v_x = 100$ V produces full-scale deflection when the switch is in position A, and voltage $v_x = 10$ V produces full-scale deflection when the switch is in position B.

First, solve for R_2 such that a 10-V input at position B causes 400 μA to flow through the two resistors.

$$R_2 + R_M = \frac{v}{i} = \frac{10\text{ V}}{400\ \mu\text{A}} = 25\text{ k}\Omega$$

Solving for R_2, we get $R_2 = 25000 - 25 = 24.975$ kΩ. Now solve for R_1 such that a 100-V input at position A causes 400 μA to flow through all three resistors.

$$R_1 + R_2 + R_M = \frac{v}{i} = \frac{100\text{ V}}{400\ \mu\text{A}} = 250\text{ k}\Omega$$

$$R_1 = 225\text{ k}\Omega$$

(b) **(A)** What is the voltage across the 20-kΩ resistor in Figure P2–71(b)? What is the voltage when the voltmeter in part (a) is set to position A and connected across the 20-kΩ resistor? What is the percentage error introduced connecting the voltmeter?

Using voltage division, the voltage across the 20-kΩ resistor is 20 V when the voltmeter is not connected. When the voltmeter is set in position A and connected in parallel to the 20-kΩ resistor, it is equivalent to placing a 250-kΩ resistor in parallel with the 20-kΩ resistor. The equivalent resistance of the parallel combination is $R_{EQ} = 20 \parallel 250 = 18.5185$ kΩ. Applying voltage division to this case yields the following result:

$$v_M = \frac{18.5185}{30 + 18.5185}(50\text{ V}) = 19.084\text{ V}$$

The percentage error in this case is 4.58%.

(c) **(E)** A different D'Arsonval meter is available with an internal resistance of 100 Ω and a full-scale deflection current of 100 μA. If the voltmeter in part (a) is redesigned using this D'Arsonval meter, would the error found in part (b) be smaller or larger? Explain.

With a full-scale deflection current of 100 μA for an applied voltage of 100 V, (switch in position A,) the total resistance of the meter must be 1 MΩ. The increased meter resistance will draw less current when it is connected in parallel to the 20-kΩ resistor and have a smaller impact on the voltage. The error will decrease. The new equivalent resistance of the meter in parallel with the 20-kΩ resistor is $R_{EQ} = 19.6078$ kΩ, the measured voltage is 19.7628 V, and the error is 1.19%.

Problem 2–72. MATLAB Function for Parallel Equivalent Resistors **(A)**

Create a MATLAB function to compute the equivalent resistance of a set of resistors connected in parallel. The function has a single input, which is a vector containing the values of all of the resistors in parallel, and it has a single output, which is the equivalent resistance. Name the function "EQparallel" and test it with at least three different resistor combinations. At least one test should have three or more resistor values.

The MATLAB function will compute the reciprocal of each value in the vector of inputs. It will then sum those reciprocals and take the reciprocal of that sum to get the equivalent parallel resistance. The function does not perform any error checking. There are other valid solutions to this problem.

The following MATLAB script saved as `EQparallel.m` provides the solution:

Analysis and Design of Linear Circuits 9th edition Thomas Solutions Manual

```
function Zp = EQparallel(Z)
%
% Compute the equivalent parallel impedance of a list of impedances
%

Zinv = 1./Z;
Zp = 1/sum(Zinv);
```

The comment in the script uses the word "impedance" to refer to the resistances. We will learn that an impedance is a generalized form of resistance and this MATLAB function will properly handle both resistances and impedances. To test the script, we entered the following three commands:

```
R1 = EQparallel([1000 1000])
R2 = EQparallel([5e3 20e3])
R3 = EQparallel([4e3 5e3 20e3])
```

which yielded the following accurate results:

```
R1 = 500.0000e+000
R2 = 4.0000e+003
R3 = 2.0000e+003
```


Analysis and Design of Linear Circuits 9th edition Thomas Solutions Manual

Problem 2–73. Finding an Equivalent Resistance using Multisim **(A)**

Use Multisim to find the equivalent resistance at terminals A and B of the resistor mesh shown in Figure P2–73. (*Hint:* Use a 1-V dc source and measure the current provided by the source.)

The Multisim circuit and the corresponding results shown below present the solution.

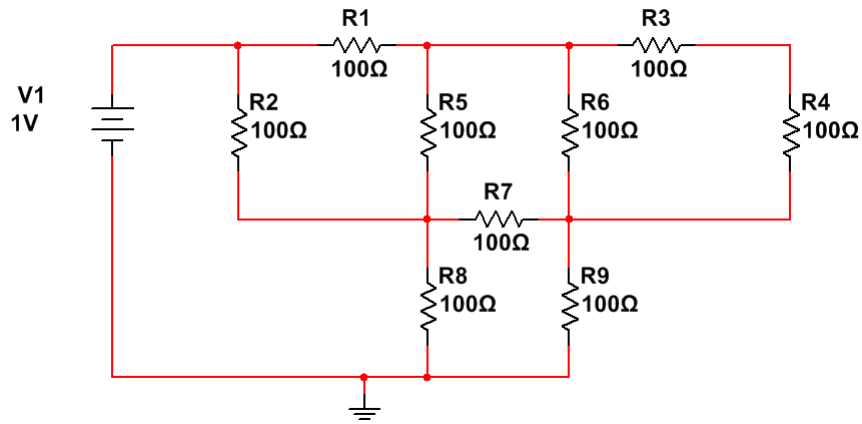

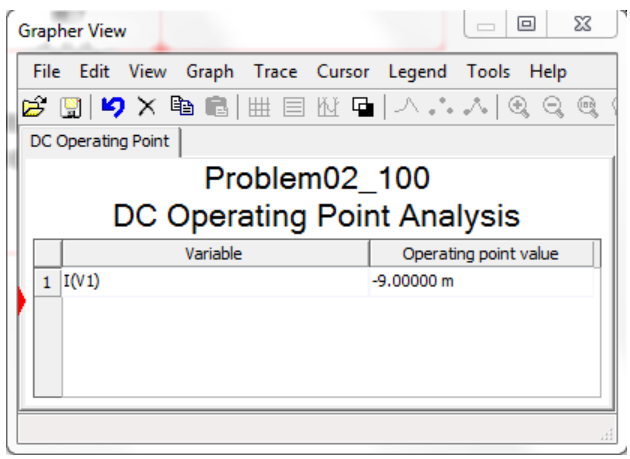

The 1-V source causes a current of 9 mA, so the equivalent resistance at terminals A and B is $R_{EQ} = v/i = (1\text{ V})/(9\text{ mA}) = 111.11\ \Omega$.

Problem 2–74. e-Car Battery Pack **(D)**

An all-electric roadster requires a battery module that can deliver 375 V and 90 kWh. A battery manufacturer can deliver a single Li-ion cell that produces 3.7 V at 3400 mAh. Design a suitable module by combining sufficient cells to meet the specification. How many total cells are needed for the application?

Each battery cell performs as a DC voltage source. To increase the voltage from 3.7 V to 375 V, we need to combine the cells in series. Combining 102 cells in series will yield a battery stack that provides 377.4 V, which will be enough for the application.

Now we need to address the energy requirement. Each cell can deliver a total of 3400 mAh at 3.7 V, which yields an energy of (3400 mAh)(3.7 V) = 12.58 Wh. Divide the total energy requirement by the energy stored in each cell to get the total number of cells required as (90 kWh)/(12.58 Wh) = 7154.2 cells. We will round this number up to an integer number of 7155 cells.

We will need to use an integer number of battery stacks, so divide the total number of cells required by the number of cells in a single stack as 7155/102 = 70.14. Therefore we will need 71 battery stacks, each containing 102 cells, for a total of 7242 cells. Connect the 71 battery stacks in parallel to deliver the correct voltage and the required energy.

Analysis and Design of Linear Circuits 9th edition Thomas Solutions Manual