# *Fundamentals of Machine Component Design 7th edition Juvinall Solutions Manual*

SKU: 9781119634270-SOLUTIONS

Fundamentals of Machine Component Design 7th edition Juvinall Solutions Manual

John Wiley & Sons, Inc.

*Publishers Since 1807*

**READ IMPORTANT LICENSE INFORMATION**

Dear Professor or Other Authorized User:

John Wiley & Sons, Inc. ("Wiley") has produced the attached solutions manual or other copyrighted material (the "Supplement") solely for use by professors and other authorized users in the manner provided below. Wiley has established these use limitations in response to concerns raised by professors and other authorized users regarding the pedagogical problems stemming from unlimited distribution of Supplements.

If the attached Supplement was delivered to you by Wiley or its representatives or if you are a professor of a course that has adopted the textbook to which the Supplement relates (the "Course"), then you are an authorized user of the Supplement. As an authorized user. Wiley grants you a non-transferable license to use the Supplement subject to the following conditions. The Supplement is for your personal use only, except that you may post the Supplement (or portions thereof) on a password protected website or otherwise provide the Supplement (or portions thereof) to students of the Course so long as such students are advised that they may not copy or distribute the Supplement to any third party. The Supplement may only be used in connection with Courses for which the related textbook has been adopted. You should take reasonable steps to protect the Supplement from unauthorized use, reproduction, or distribution. Your use of the Supplement indicates your acceptance of the conditions set forth in this Agreement. If you do not accept these conditions, you must return the Supplement unused within 30 days of receipt.

All rights (including without limitation, copyrights, patents and trade secrets) in the Supplement are and will remain the sole and exclusive property of Wiley and/or its licensors. The Supplement is furnished by Wiley on an "as is" basis without any warranties, express or implied. This Agreement will be governed by and construed pursuant to the laws of the State of New York, without regard to such State's conflict of law rules.

We hope that you find the Supplement useful.

Sincerely,

JOHN WILEY & SONS, INC.

---

Excerpts from this work may be reproduced by instructors for distribution on a not-for-profit basis for testing or instructional purposes only to students enrolled in courses for which the textbook, Fundamentals of Machine Component Design by Robert C. Juvinall and Kurt M. Marshek has been adopted. Any other reproduction or translation of this work beyond that permitted by Sections 107 or 108 of the 1976 United States Copyright Act without the permission of the copyright owner is unlawful.

SOLUTION (RP2.1)

**Known:** A 1800 rpm motor is rotating a blower at 6000 rpm through a gear box having a known weight.

**Find:** Determine all loads acting on the gear box when the motor output is 1 hp, and sketch the gear box as a free-body in equilibrium.

**Schematic and Given Data:**

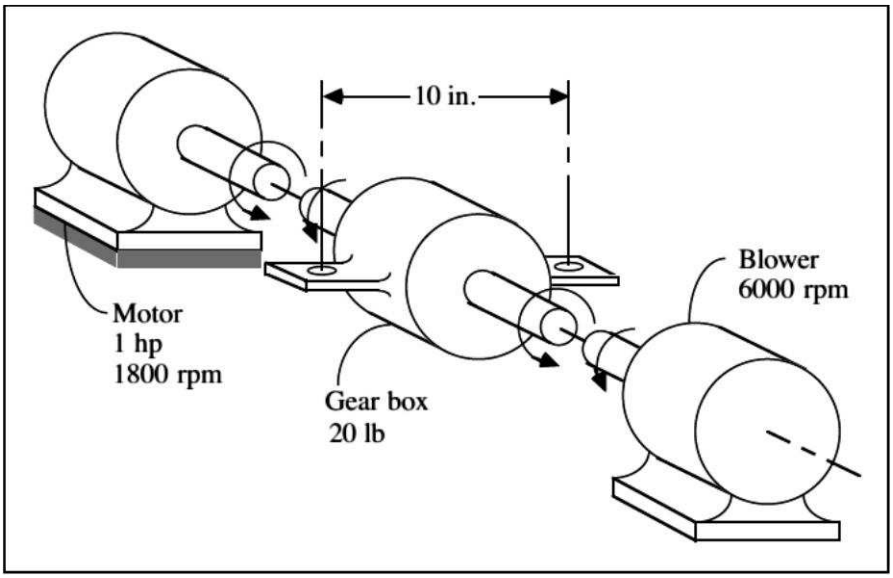


**Assumption:** The friction losses in the gear box are negligible.

**Analysis:**

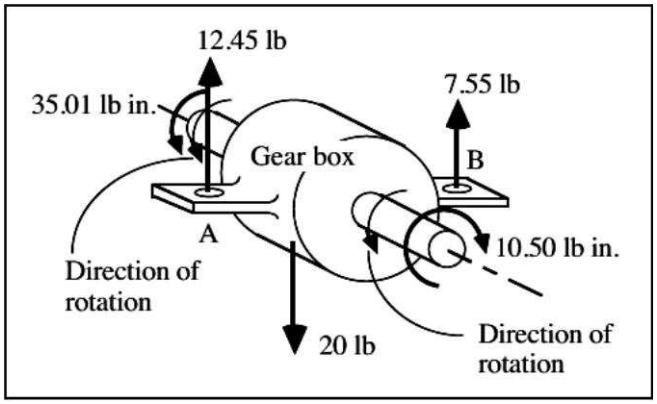


1. From Eq. (1.3), $T = \dfrac{5252 \cdot \dot{W}}{n} = \dfrac{5252(1)}{1800}$

   T = 2.92 lb·ft = 35.01 lb·in. (motor shaft)

2. To the blower, $T = 35.01\left(\dfrac{1800\text{ rpm}}{6000\text{ rpm}}\right) = 10.50\text{ lb}\cdot\text{in.}$ (to blower)

3. Mounting torque reaction = 35.01 − 10.50 = 24.51 lb·in.



Fundamentals of Machine Component Design 7th edition Juvinall Solutions Manual

4. Mounting forces = 24.51 lb·in./ 10 in. = 2.45 lb. The mounting force acts upward at A and downward at B.
5. Add 10 lb acting upward at A and B to support the gravity load, giving 12.45 lb upward at A and 7.55 lb upward at B.

---



Fundamentals of Machine Component Design 7th edition Juvinall Solutions Manual

SOLUTION (2.1)

**Known:** The motor operates at constant speed and develops a torque of 100 lb-in. during normal operation. A 5:1 ratio gear reducer is attached to the motor shaft; i.e., the reducer output shaft rotates in the same direction as the motor but at one-fifth the motor speed. Rotation of the reducer housing is prevented by the "torque arm," pin-connected at each end as shown in Fig. P2.1. The reducer output shaft drives the load through a flexible coupling. Gravity and friction can be neglected.

**Find:** Determine the loads applied to (a) the torque arm, (b) the motor output shaft, and (c) the reducer output shaft.

**Schematic and Given Data:**

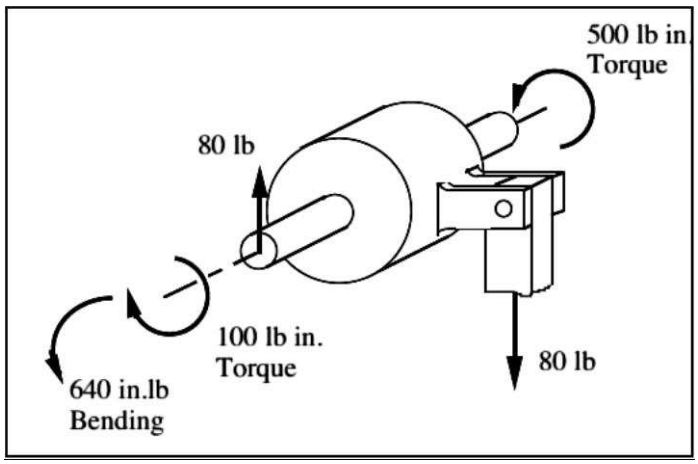


**Assumption:** The friction losses in the gear box are negligible.

**Analysis:**

1. The force in the torque arm is 80 lb tension.
2. The loads on the reducer input shaft are 100 lb in. torque, plus 80 lb vertical load and 640 in lb bending moment in the plane of the motor face.
3. The load on the reducer output shaft is 500 lb in. torque.



Fundamentals of Machine Component Design 7th edition Juvinall Solutions Manual

SOLUTION (RP2.2)

**Known:** An electric fan motor supported by mountings at A and B delivers a known torque to fan blades which, in turn, push air forward with a known force.

**Find:** Determine all loads acting on the fan and sketch it as a free-body in equilibrium.

**Schematic and Given Data:**

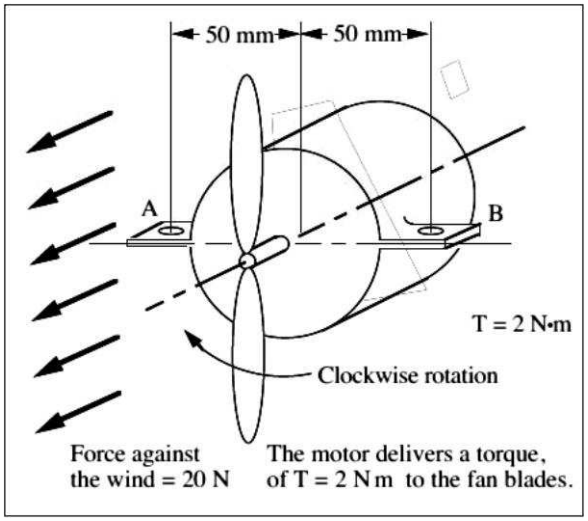


**Assumption:** The gravity forces can be ignored.

**Analysis:**

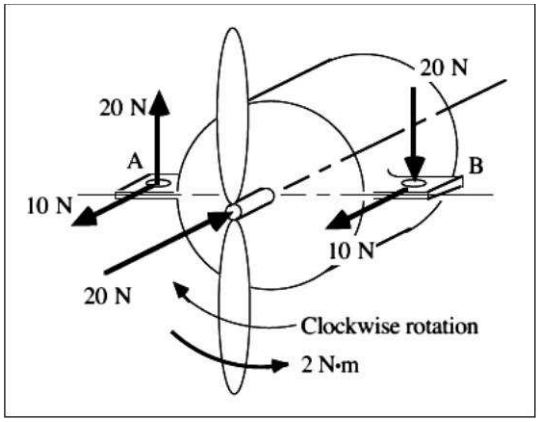


1. The torque exerted on the blades by the wind is 2 N·m counterclockwise.
2. Mounting forces = (2 N·m)/(0.1 m) = 20 N. Thus, 20 N is exerted upward at A and downward at B.



Fundamentals of Machine Component Design 7th edition Juvinall Solutions Manual

SOLUTION (2.2)

**Known:** A pump is driven by a motor integrally attached to a gear reducer. Shaft C is attached to C′, face A is attached to A′, and face B is attached to B′.

**Find:** Sketch the connecting tube and show all loads acting on it.

**Schematic and Given Data:**

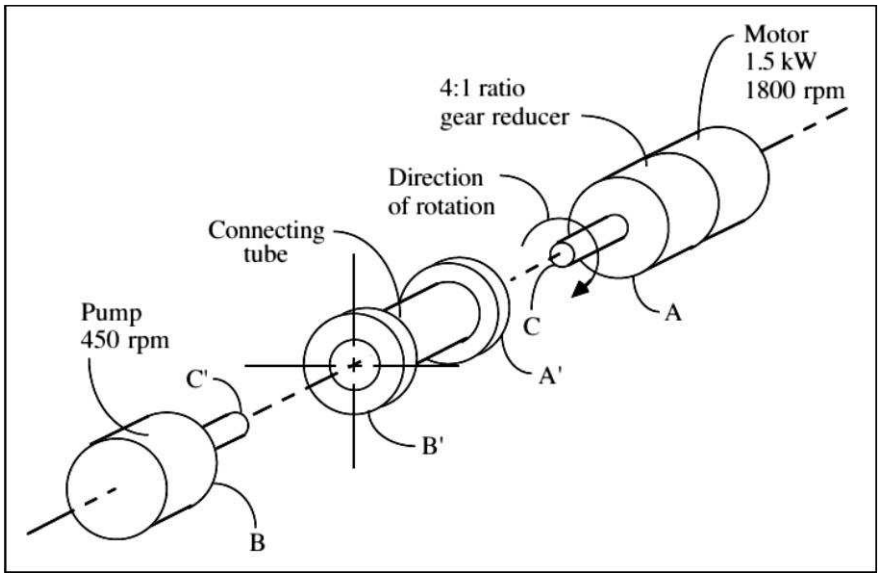


**Assumption:** The components are in static equilibrium.

**Analysis:**

1. From Eq. (1.2), motor torque, $T = \dfrac{9549 \cdot \dot{W}}{n} = \dfrac{9549(1.5)}{1800} = 7.96\ \mathrm{N \cdot m}$
2. Reducer output torque = Pump input torque = 7.96(4) = 31.84 N·m

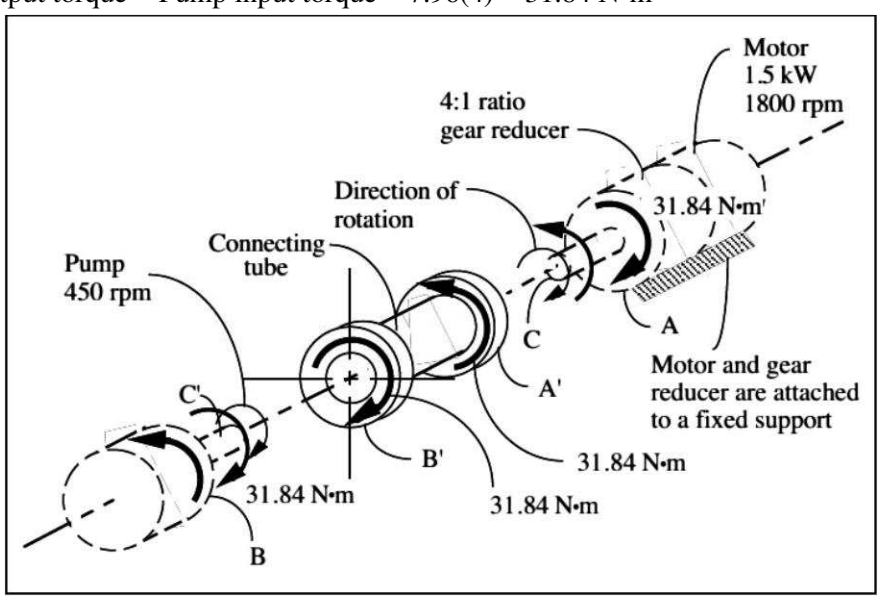




Fundamentals of Machine Component Design 7th edition Juvinall Solutions Manual

SOLUTION (RP2.3)

**Known:** An engine and propeller rotate clockwise viewed from the propeller end. A reduction gear housing is bolted to the engine housing through the bolt holes shown. The power and angular velocity of the engine are known.

**Find:**

(a) Determine the direction and magnitude of the torque applied to the engine housing by the reduction gear housing.

(b) Determine the magnitude and direction of the torque reaction tending to rotate (roll) the aircraft.

(c) Find an advantage of using opposite-rotating engines with twin-engine propeller-driven aircraft.

**Schematic and Given Data:**

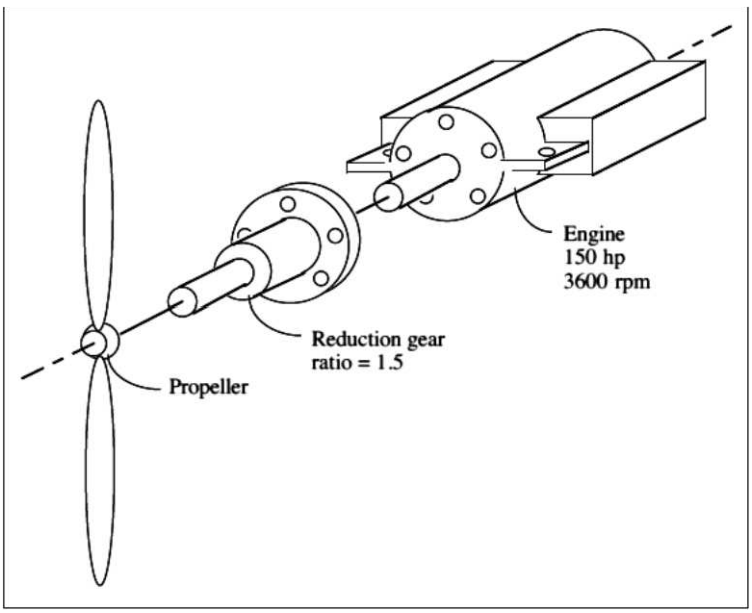


**Assumption:** The friction losses are negligible.

**Analysis:**

1. From Eq. (1.3), engine torque, $T = \frac{5252 \cdot \dot{W}}{n} = \frac{5252(150)}{3600} = 219 \text{ lb ft}$

2. Reduction gear torque, T = 219(1.5) = 328 lb ft



Fundamentals of Machine Component Design 7th edition Juvinall Solutions Manual

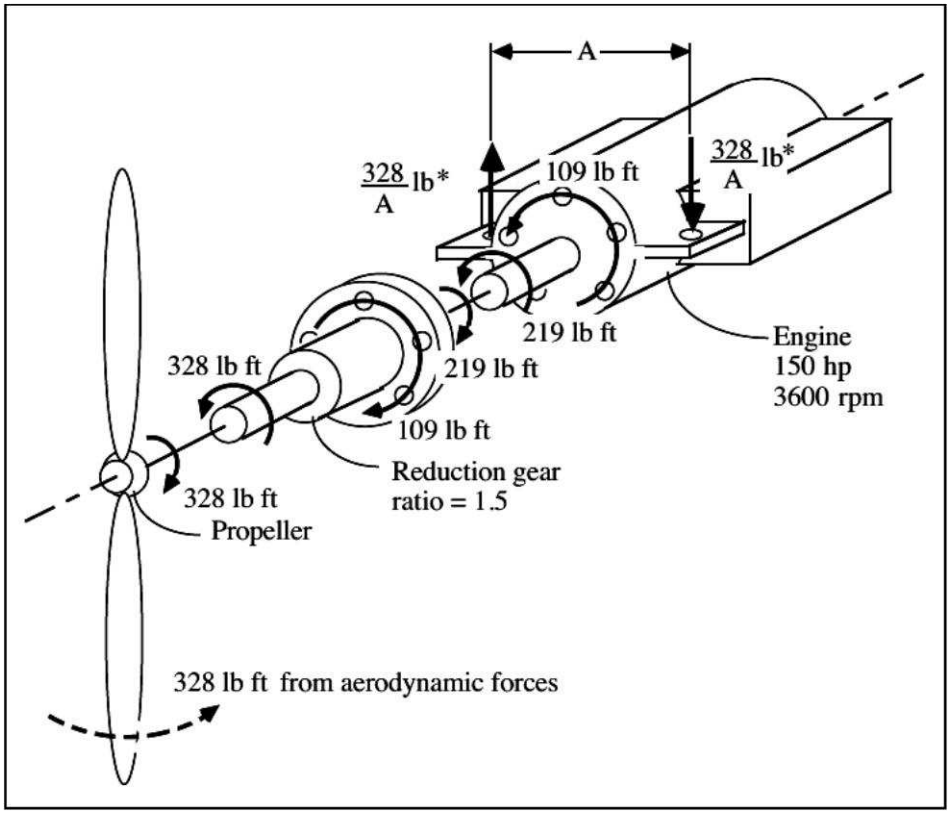


3. The attachment forces apply an equal and opposite torque of 328 lb·ft ccw tending to "roll" the airplane--see (*) in the above figure.
4. Thus, the torque applied to the engine housing by the reduction gear housing is 109 lb ft counter-clockwise, and the torque reaction tending to rotate the aircraft is 328 lb ft counter-clockwise. ■
5. Torque reactions applied to the air frame by the two engines cancel. (This produces bending in the connecting structure, but does not require a compensating roll torque from the aerodynamic control surfaces.) ■



Fundamentals of Machine Component Design 7th edition Juvinall Solutions Manual

SOLUTION (2.3)

**Known:** A gear reduction unit and a propeller of an outboard boat operate with a known motor torque and a known thrust.

**Find:** Show all external loads acting on the assembly.

**Schematic and Given Data:**

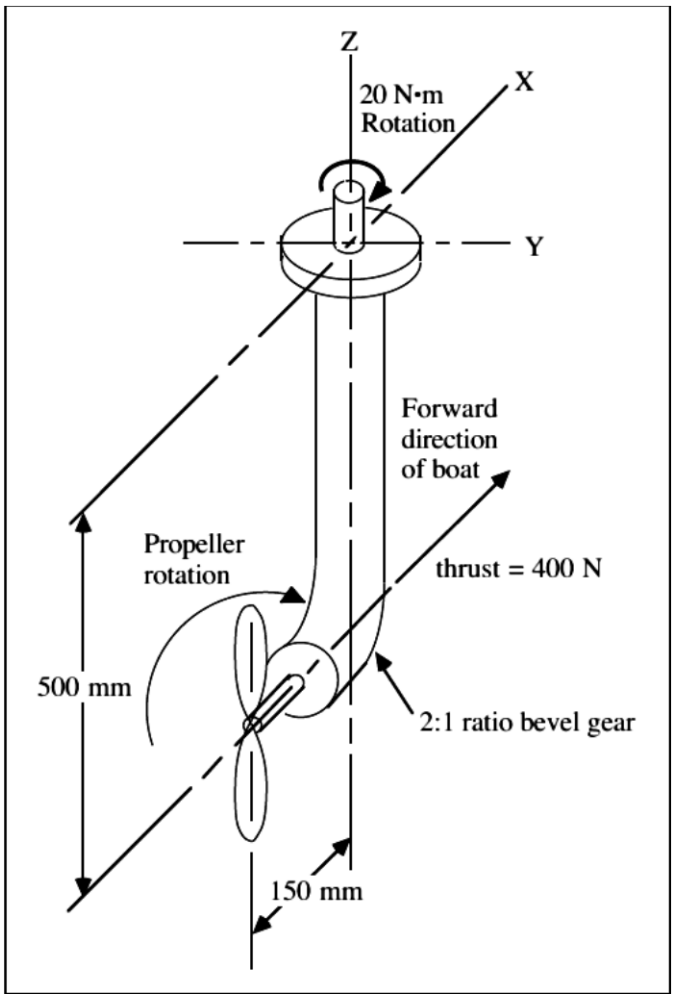


**Assumption:** The effects of gravity and friction are negligible.



Fundamentals of Machine Component Design 7th edition Juvinall Solutions Manual

**Analysis:**

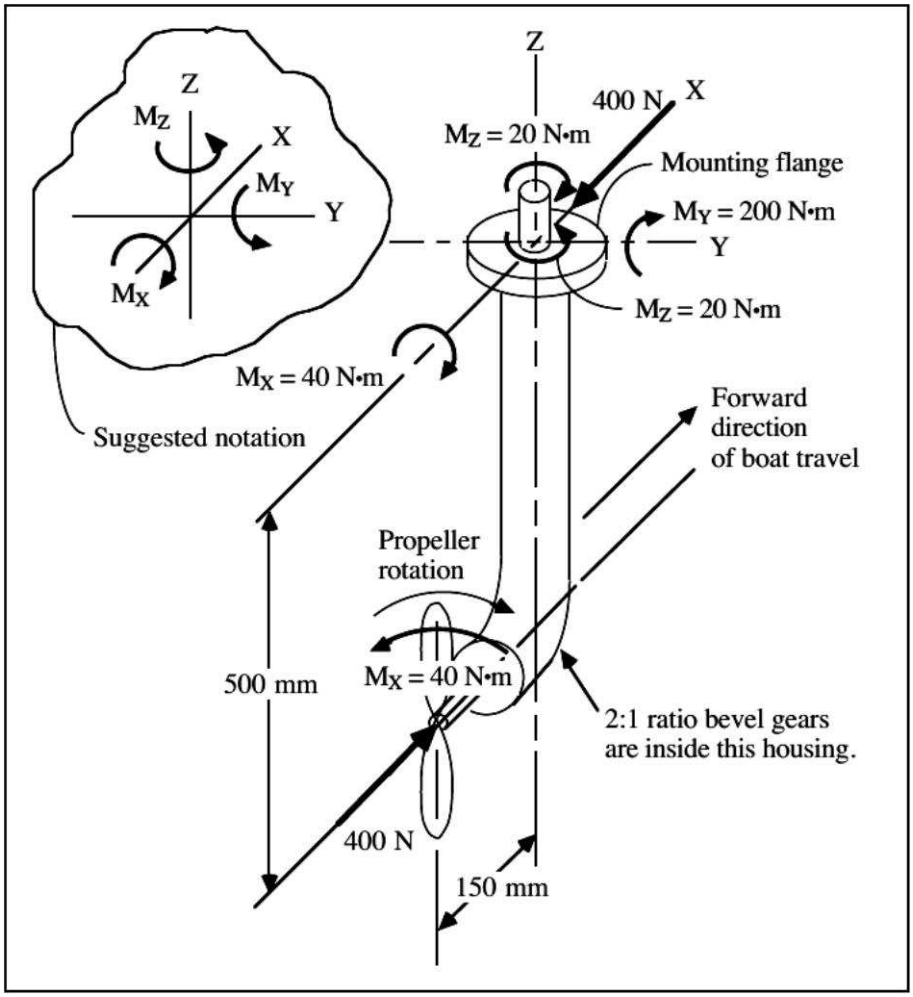




Fundamentals of Machine Component Design 7th edition Juvinall Solutions Manual

SOLUTION (RP2.4)

**Known:** A rider is applying full weight to one pedal of a bicycle.

**Find:** Draw as free-bodies in equilibrium:

(a) The pedal, crank, and pedal sprocket assembly.
(b) The rear wheel and sprocket assembly.
(c) The front wheel.
(d) The entire bicycle and rider assembly.

**Schematic and Given Data:**

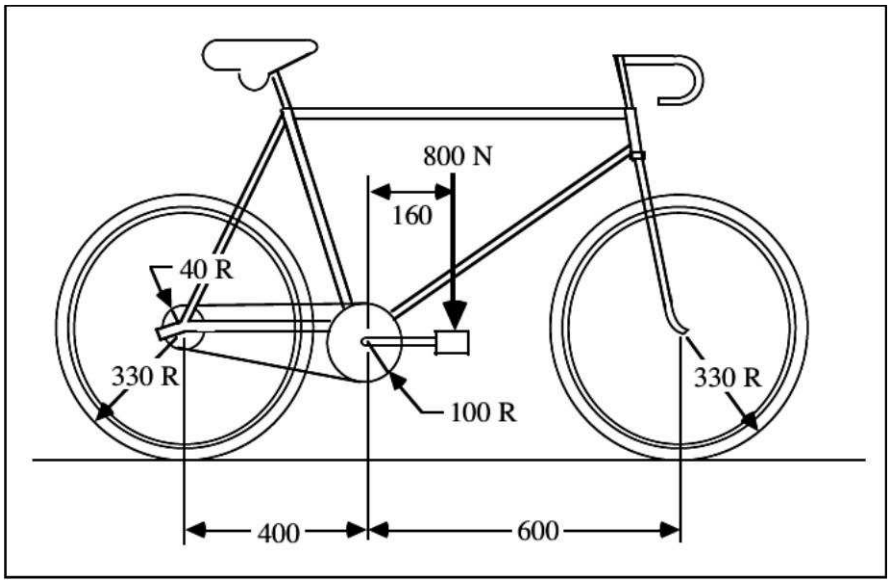


**Assumptions:**

1. The bicycle can be treated as a two-dimensional machine.
2. The bicycle weight is negligible.

**Analysis:**

1. For the pedal, crank, and pedal sprocket assembly, the chain force is F = 800(160/100) = 1280 N

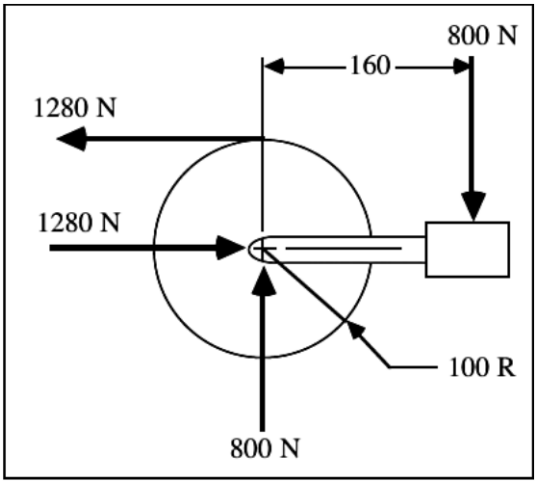




Fundamentals of Machine Component Design 7th edition Juvinall Solutions Manual

2. For the rear wheel and sprocket assembly,
   rear wheel gravity load = 800(440/1000) = 352 N
   rear wheel friction force = 1280(40/330) = 155.2 N
   horizontal bearing force = 1280 + 155.2 = 1435.2 N

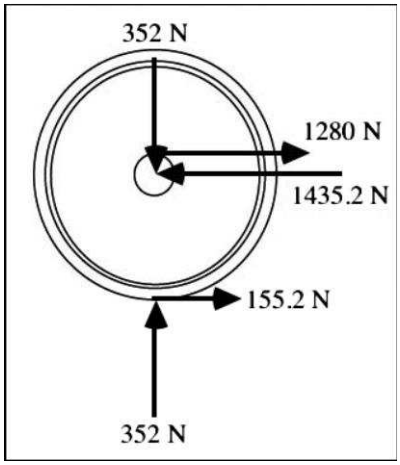


3. For the front wheel, front wheel gravity load = 800(560/1000) = 448 N

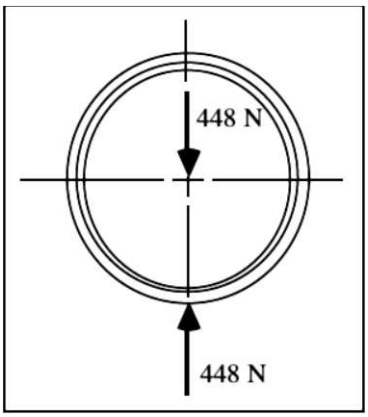


4. For the entire bicycle and rider assembly, the drawing is given below.

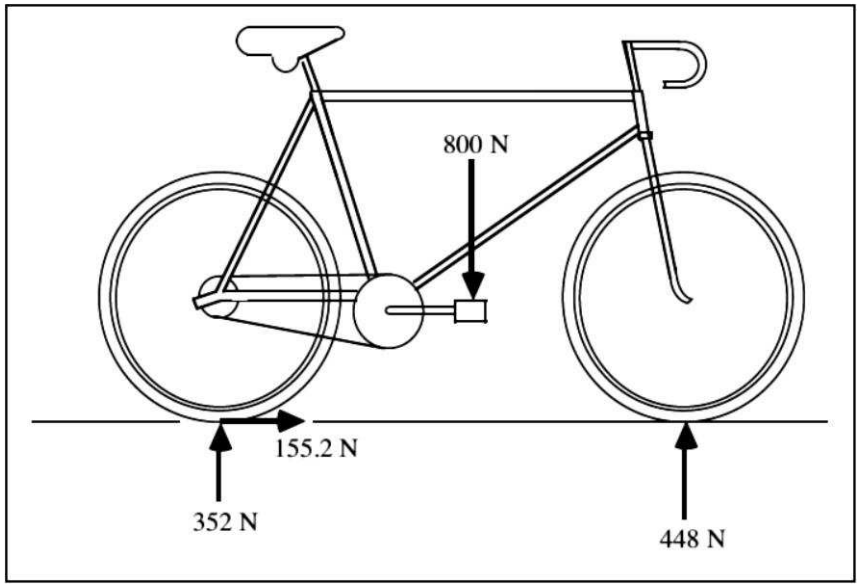




Fundamentals of Machine Component Design 7th edition Juvinall Solutions Manual

**Comments:** The drawing does not show the rearward 155.2 N inertia force necessary to establish $\sum F_H = 0$. It would be located thru the center of gravity of the cycle-plus-rider, the location of which is not given. Since this vector would be at some distance "h" above the ground, the resulting counter clockwise couple, 155.2 h, would be balanced by decreasing the vertical force on the front wheel and increasing the vertical force on the rear wheel, both by (155.2 h/1000) N.



Fundamentals of Machine Component Design 7th edition Juvinall Solutions Manual

SOLUTION (2.4)

**Known:** A bevel gear reducer with known input and output angular velocity is driven by a motor delivering a known torque of 12 N·m. The reducer housing is held in place by vertical forces applied at mountings A, B, C and D.

**Find:** Determine the forces applied to the reducer at each of the mountings:

(a) Assuming 100% reducer efficiency.

(b) Assuming 95% reducer efficiency.

**Schematic and Given Data:**

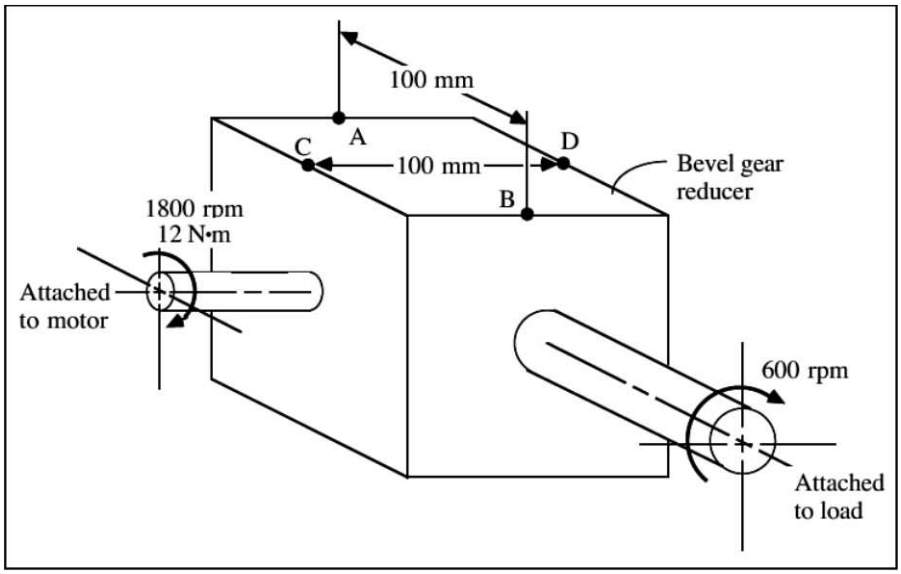


**Assumption:** The bevel gear reducer is in static equilibrium.

**Analysis:**

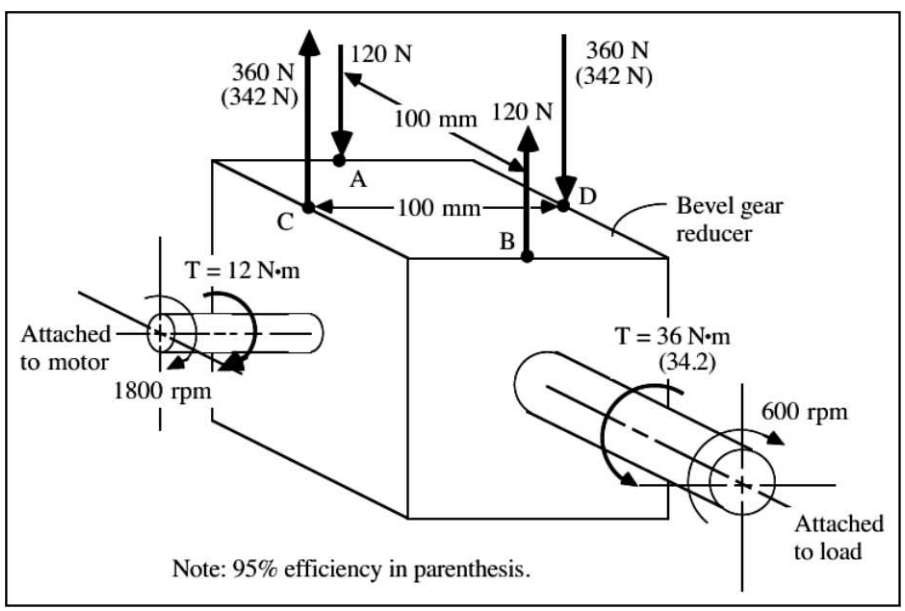




Fundamentals of Machine Component Design 7th edition Juvinall Solutions Manual

SOLUTION (RP2.5)

**Known:** A motor applies a known torque to the pinion shaft of a spur gear reducer.

**Find:** Sketch free-bodies in equilibrium for

(a) The pinion and shaft assembly.
(b) The gear and shaft assembly.
(c) The housing.
(d) The entire reducer assembly.

**Schematic and Given Data:**

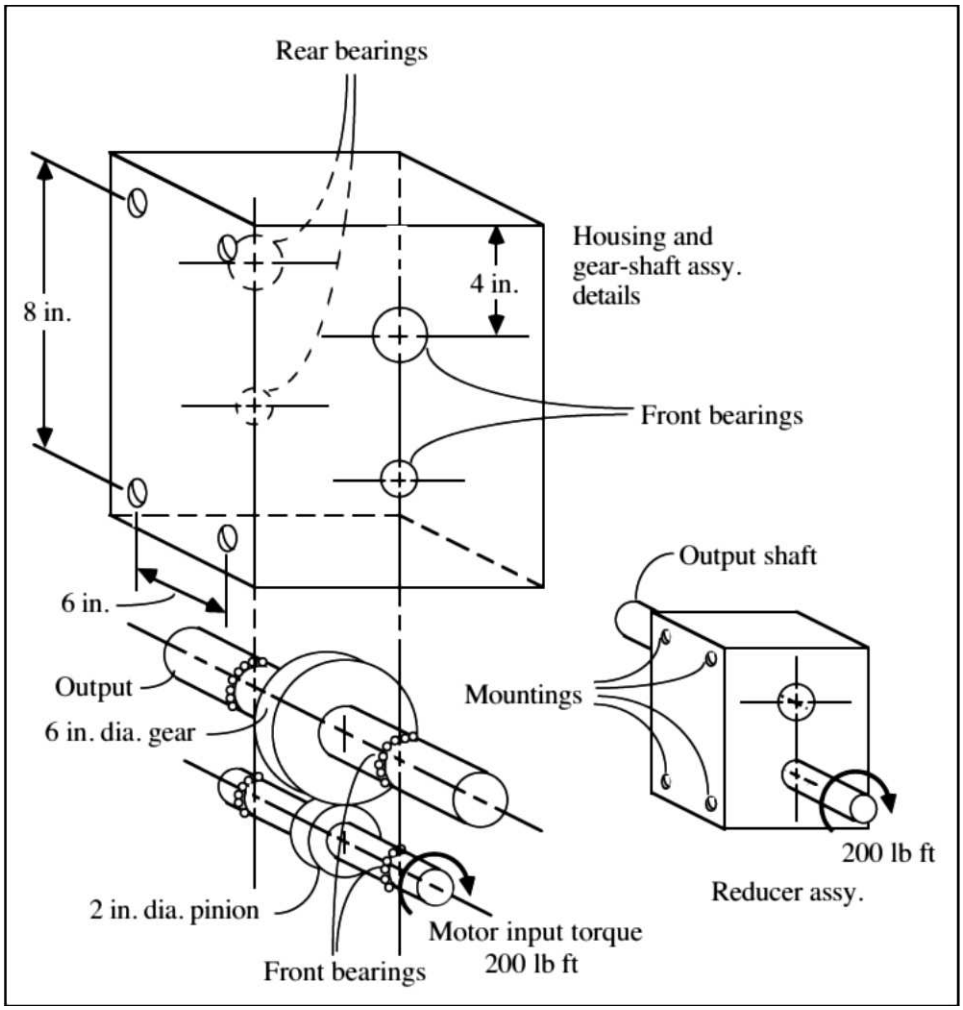


**Assumptions:**

1. The effect of gravity is negligible.
2. The forces between the gears act tangentially.



Fundamentals of Machine Component Design 7th edition Juvinall Solutions Manual

**Analysis:**

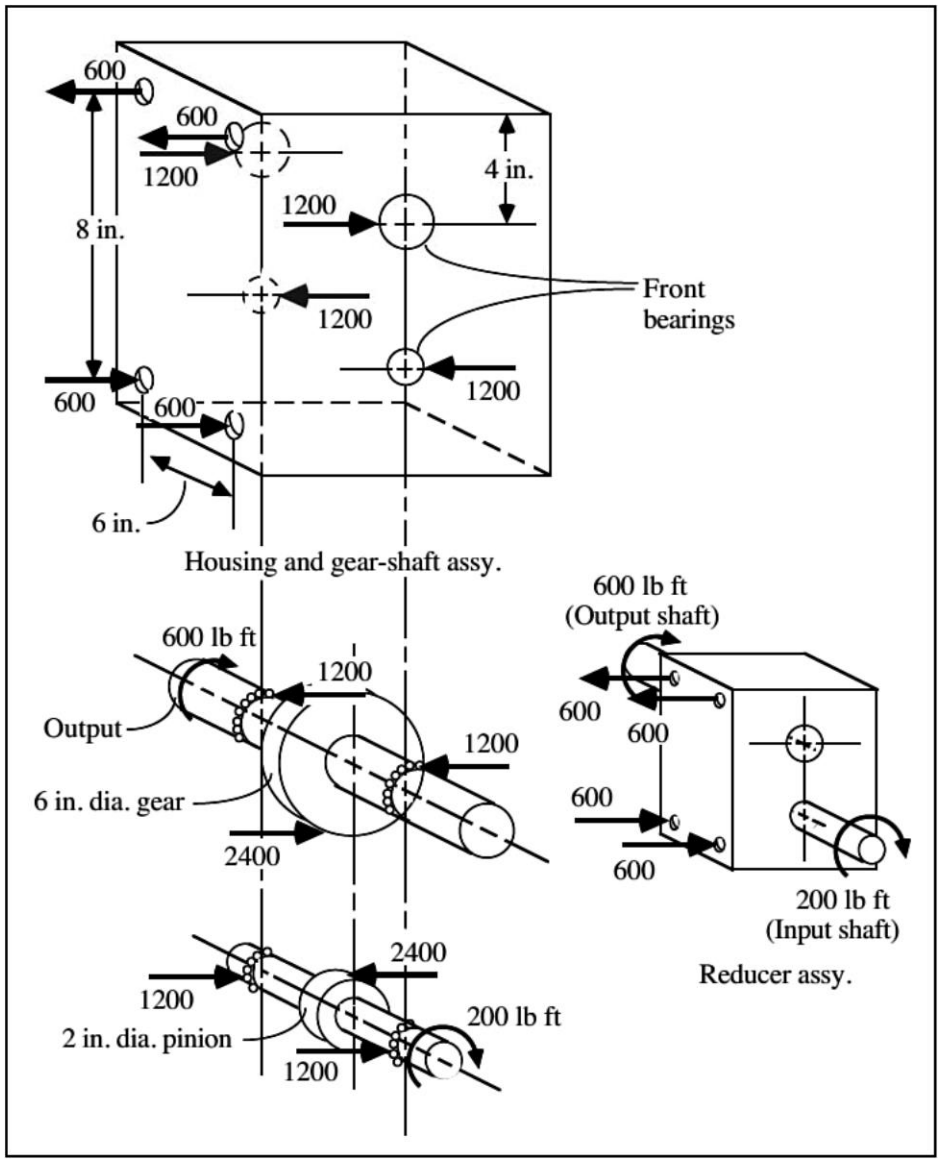




Fundamentals of Machine Component Design 7th edition Juvinall Solutions Manual

SOLUTION (2.5)

**Known:** An engine rotates with a known angular velocity and delivers a known torque to a transmission which drives a front and rear axle.

**Find:** Determine the forces applied to the free-body at A, B, C, and D.

**Schematic and Given Data:**

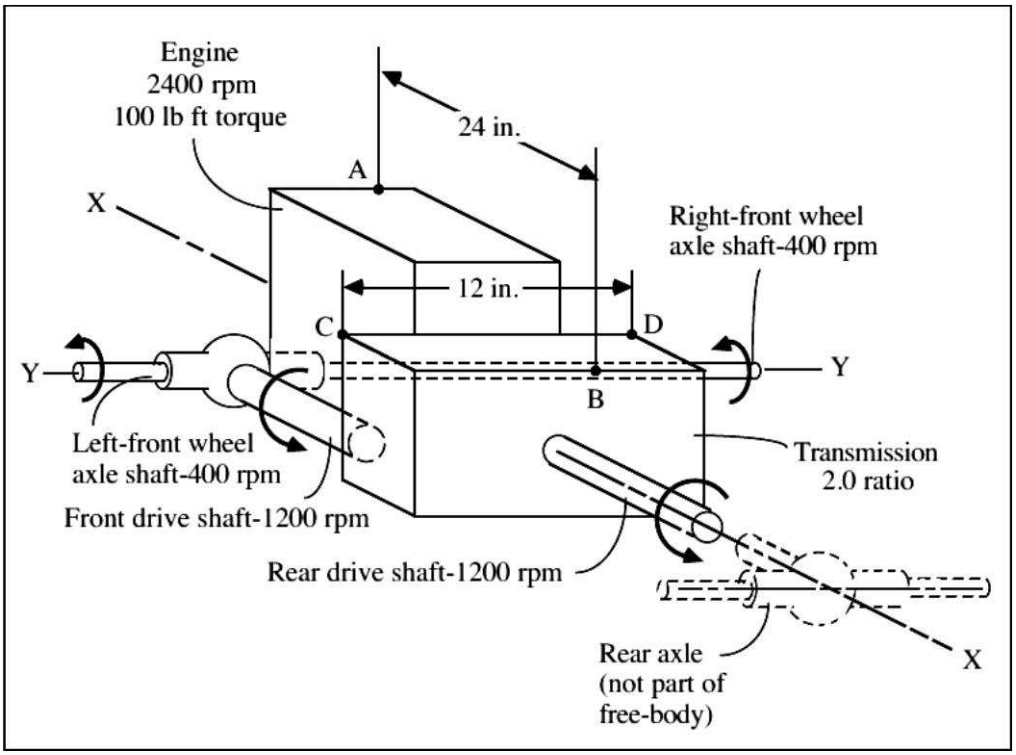


**Assumptions:**

1. The friction and gravity forces are negligible.
2. The mountings exert only vertical forces.
3. All four wheels have full traction.



Fundamentals of Machine Component Design 7th edition Juvinall Solutions Manual

**Analysis:**

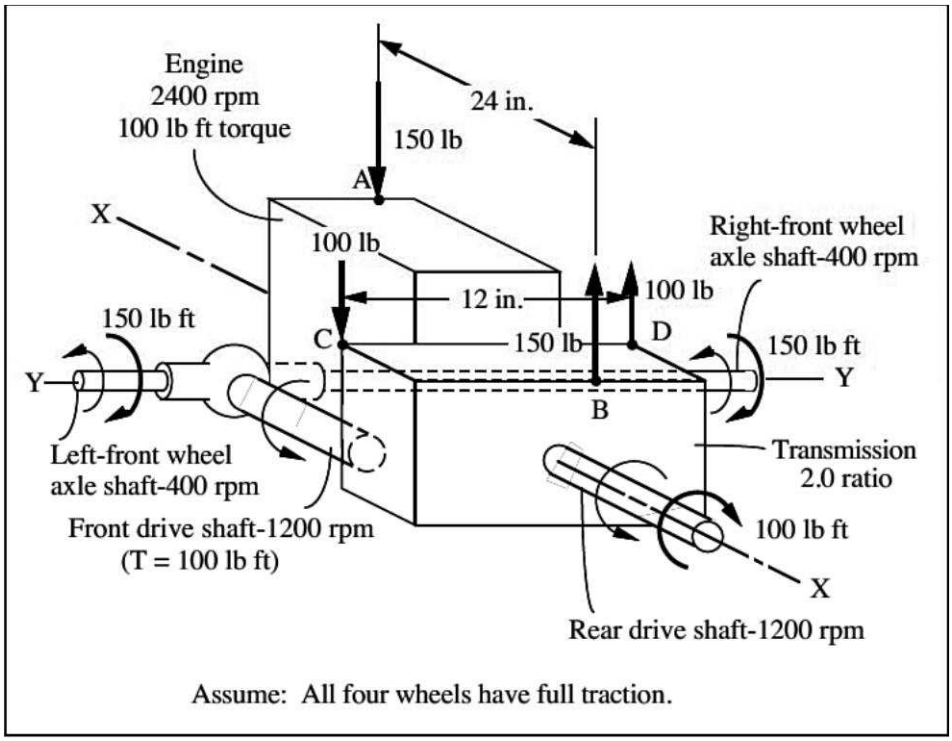


1. $$\text{Drive shaft torque} = \frac{(\text{Engine torque})(\text{Transmission ratio})}{\text{Number of drive shafts}}$$

   $$= (100)(2)/2 = 100 \text{ lb ft}$$

2. $$\text{Wheel torque} = \frac{(\text{Drive shaft torque})(\text{Axle ratio})}{\text{Number of wheels per drive shaft}}$$

   $$= (100)(3)/2 = 150 \text{ lb ft}$$

3. Therefore, A: 150 lb down ■
   B: 150 lb up ■
   C: 100 lb down ■
   D: 100 lb up ■



Fundamentals of Machine Component Design 7th edition Juvinall Solutions Manual

SOLUTION (2.6)

**Known:** A gear exerts the same known force on each of two geometrically different steel shafts supported by self-aligning bearings at A and B.

**Find:** Draw shear and bending moment diagrams for each shaft.

**Schematic and Given Data:**

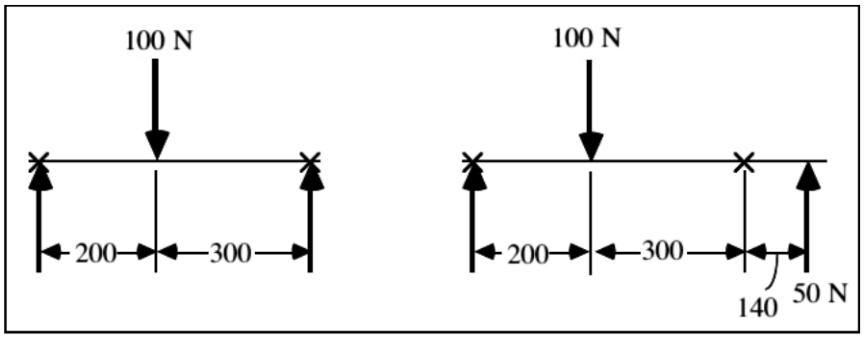


**Analysis:**

$$F_B = 100\left(\frac{200}{500}\right) = 40\text{ N}$$

$$F_B = \frac{-100(200) + 50(640)}{500} = 24\text{ N}$$

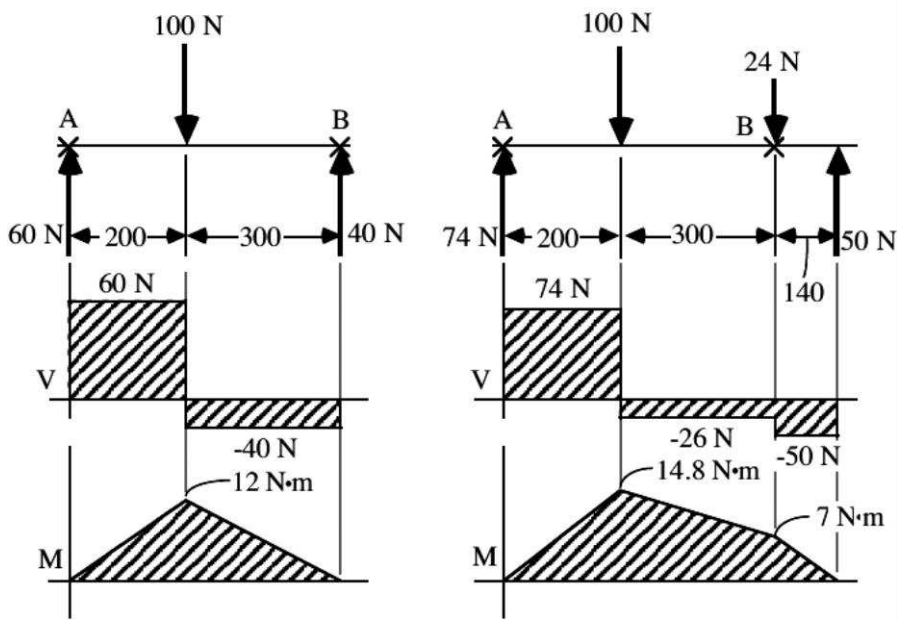




Fundamentals of Machine Component Design 7th edition Juvinall Solutions Manual

SOLUTION (RP2.6)

**Known:** A pulley of known radius is attached at its center to a structural member. A cable wrapped 90° around the pulley carries a known tension.

**Find:**

(a) Draw a free-body diagram of the structure supporting the pulley.

(b) Draw shear and bending moment diagrams for both the vertical and horizontal portions of the structure.

**Schematic and Given Data:**

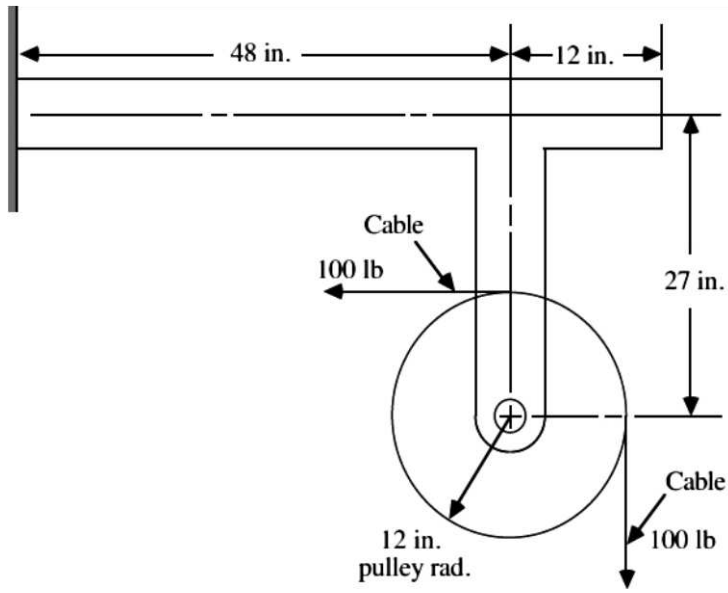


**Assumption:** The weight of the pulley and the supporting structure is negligible.

**Analysis:**

1. Free-body diagram of the structural member:

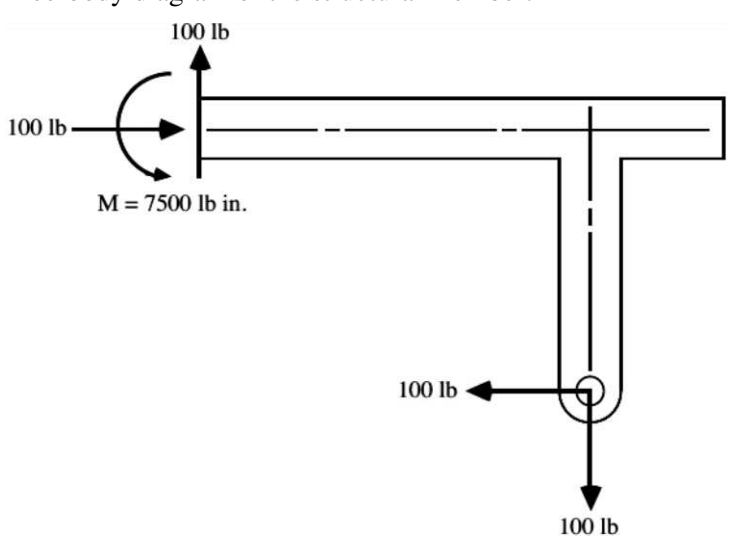


M = 100 (27+48) = 7500 lb in.



Fundamentals of Machine Component Design 7th edition Juvinall Solutions Manual

2. Vertical portion of member:

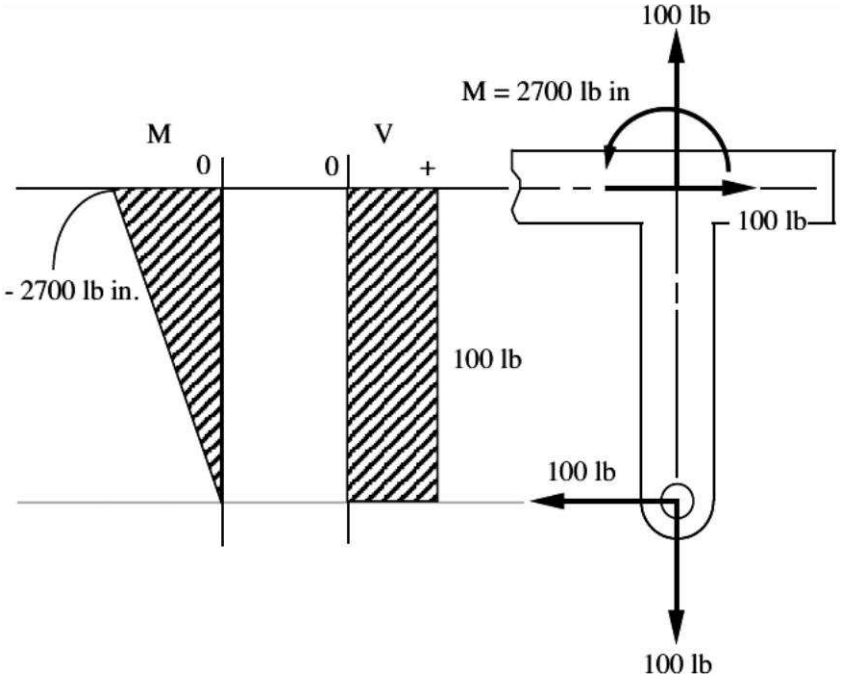


3. Horizontal portion of member:

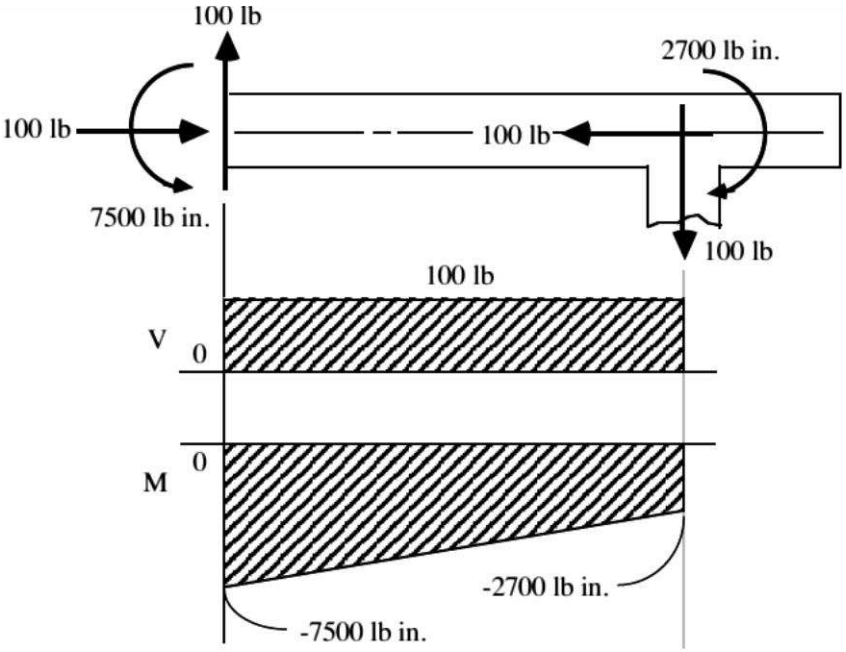




Fundamentals of Machine Component Design 7th edition Juvinall Solutions Manual

SOLUTION (RP2.7)

**Known:** A bevel gear is attached to a shaft supported by self-aligning bearings at A and B, and is driven by a motor. The axial force, radial force, and tangential force are known.

**Find:**

(a) Draw (to scale) axial load, shaft torque, shear force, and bending moment diagrams for the shaft.

(b) Determine the values of axial load and torque along the shaft.

**Schematic and Given Data:**

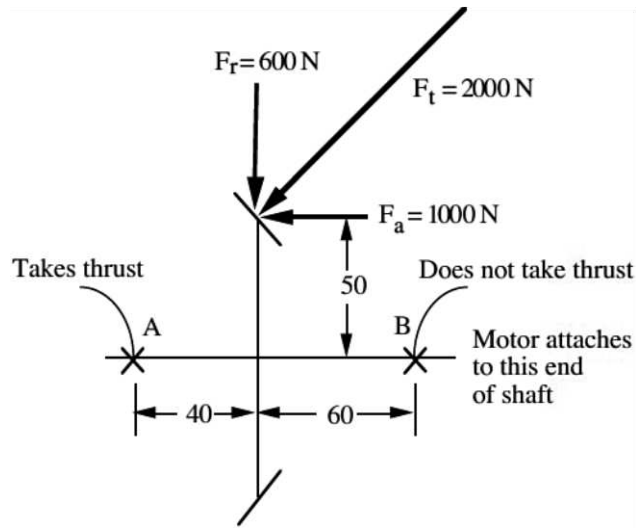


**Assumptions:**

1. The weight of the gear and shaft is negligible.
2. The bearing at A takes all the thrust load.

**Analysis:**

(a) Since bearing B carries no axial thrust load, $B_x = 0$. A free body diagram of the bevel gear and shaft is:

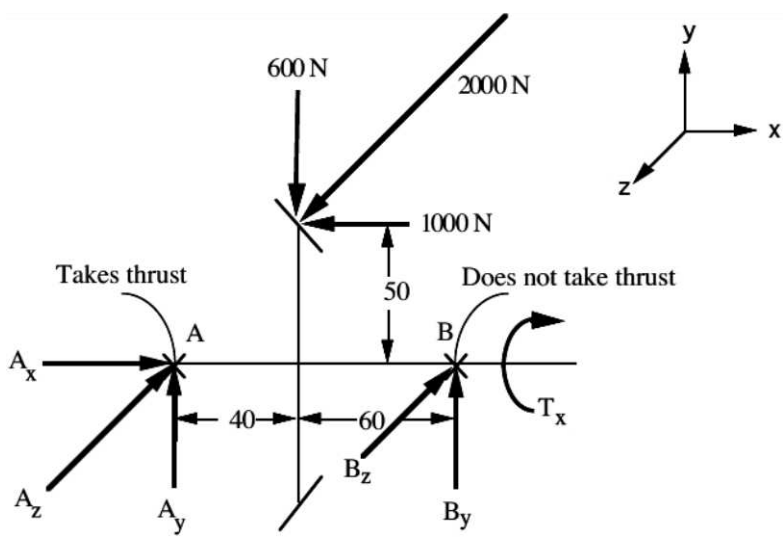




Fundamentals of Machine Component Design 7th edition Juvinall Solutions Manual

From force equilibrium:

1. $\sum M_{ZA} = 0: \; B_y = \dfrac{600(40) - 1000(50)}{100} = -260 \text{ N}$
2. $\sum F_y = 0: \; A_y - 600 + B_y = 0; \; A_y = 860 \text{ N}$
3. $\sum M_{yA} = 0: \; (2000)(40) - (B_Z)(100) = 0; \; B_Z = 800 \text{ N}$
4. $\sum M_{xx} = 0: \; T_x - (2000)(50) = 0; \; T_x = 100{,}000 \text{ N mm}$
5. $\sum F_x = 0: \; A_x - 1000 \text{ N} = 0; \; A_x = 1000 \text{ N}$
6. $\sum F_Z = 0: \; A_Z + B_Z - 2000 = 0; \; A_z = 1200 \text{ N}$

The answers are:

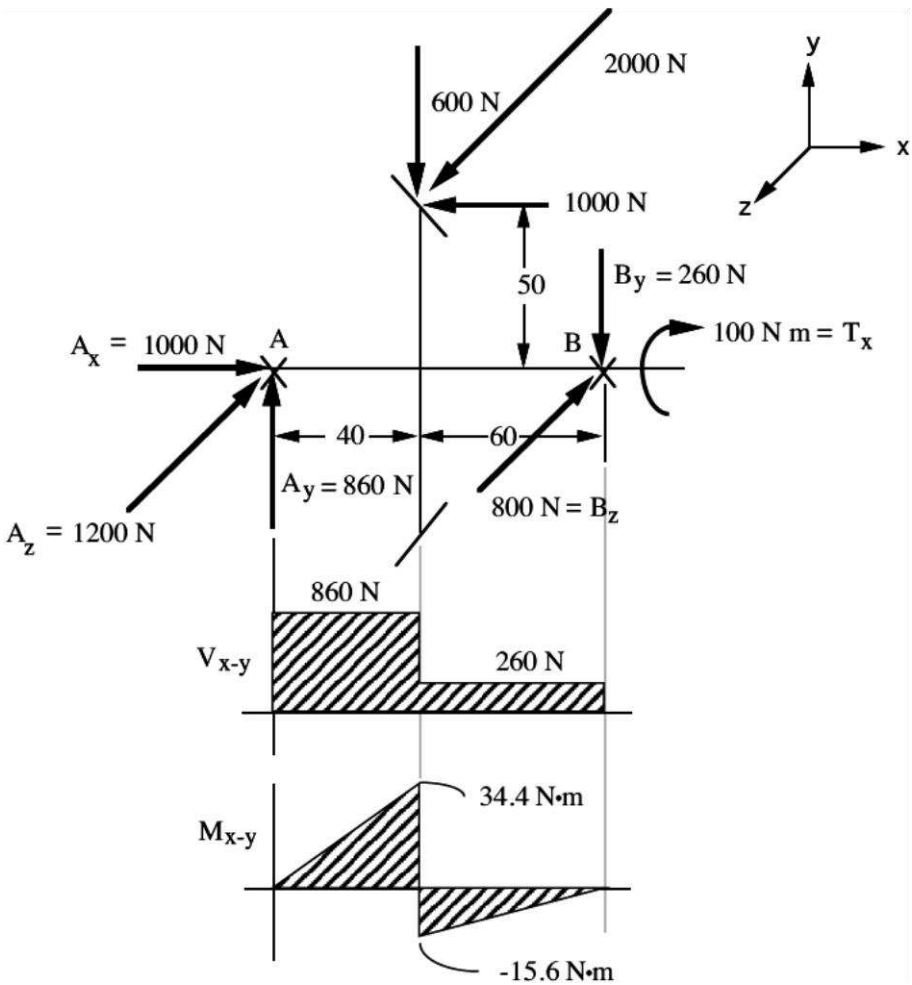




Fundamentals of Machine Component Design 7th edition Juvinall Solutions Manual

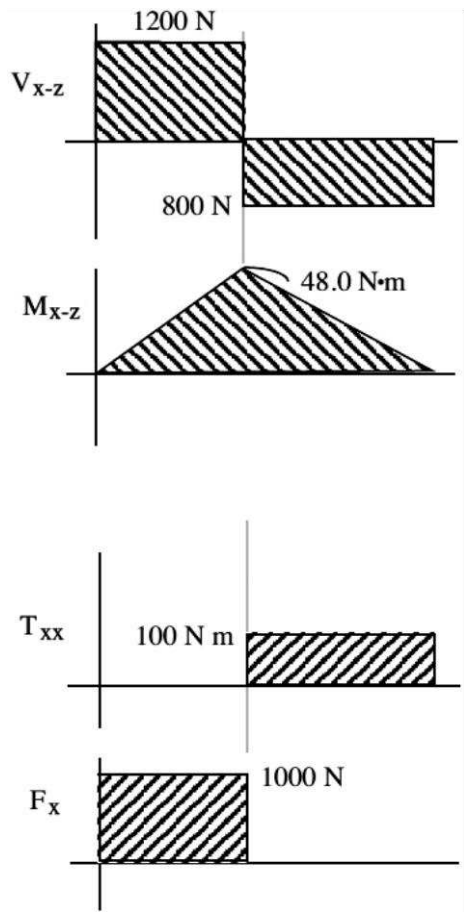


(b) The compressive force between the gear and the bearing A is 1000 N. The torque between the gear and the bearing B is 50 mm times the tangential gear force, $F_t$. For $F_t$ = 2000 N, this torque is (2 kN)(50 mm) = 100 N·m.

---



Fundamentals of Machine Component Design 7th edition Juvinall Solutions Manual

SOLUTION (2.7)

**Known:** The shaft with bevel gear is supported by self-aligning bearings A and B. Gear loads are known.

**Find:** Draw axial load, shaft torque, shear force, and bending moment diagrams for the shaft.

**Schematic and Given Data:**

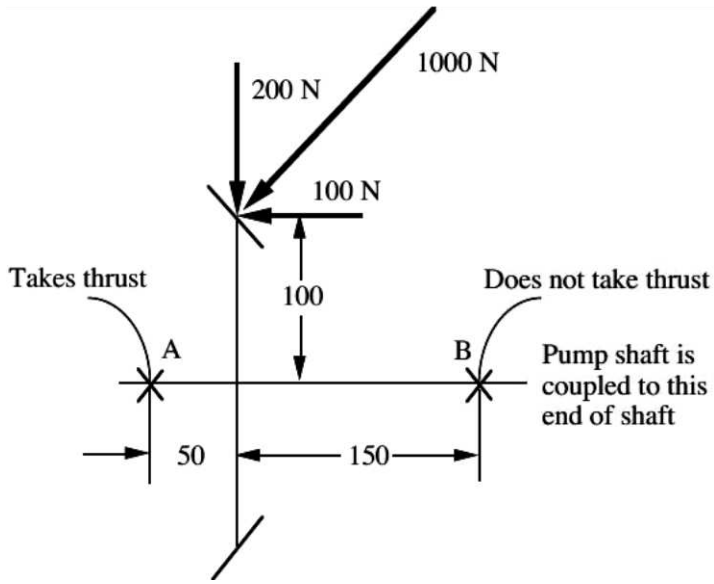


**Assumptions:**

1. The weight of the gear and shaft is negligible.
2. The bearing at A takes all the thrust load.

**Analysis:** A free body diagram of the shaft with bevel gear is:

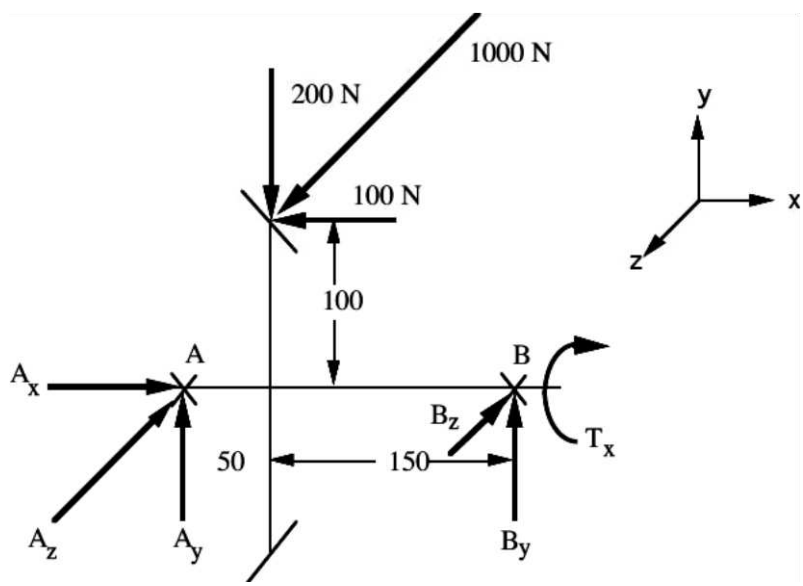




Fundamentals of Machine Component Design 7th edition Juvinall Solutions Manual

Force equilibrium requires:

1. $\sum M_{ZA} = 0 : B_y = \dfrac{100(100) - 200(50)}{200} = 0 \text{ N}$
2. $\sum F_y = 0 : A_y - 200 + B_y = 0; \; A_y = 200 \text{ N}$
3. $\sum M_{yA} = 0 : (1000)(50) - (B_Z)(200) = 0; \; B_Z = 250 \text{ N}$
4. $\sum M_{xx} = 0 : \; T_x - (1000)(100) = 0; \; T_x = 100 \text{ N m}$
5. $\sum F_x = 0 : \; A_x - 100 = 0; \; A_x = 100 \text{ N}$
6. $\sum F_Z = 0 : \; A_Z + B_Z - 1000 = 0; \; A_z = 750 \text{ N}$

The answers are:

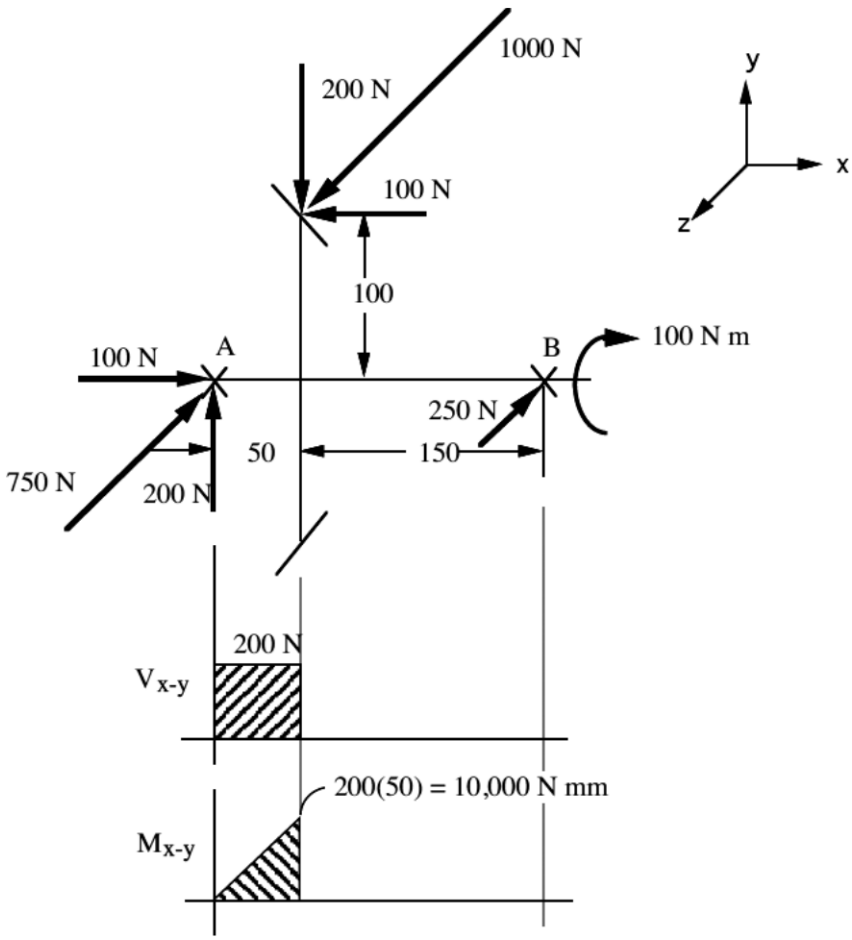




Fundamentals of Machine Component Design 7th edition Juvinall Solutions Manual

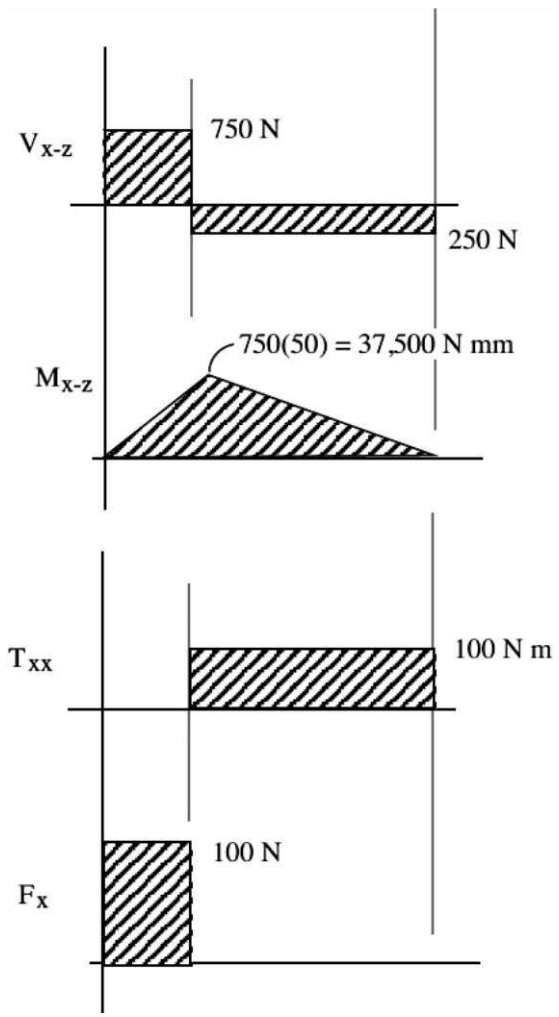




Fundamentals of Machine Component Design 7th edition Juvinall Solutions Manual

SOLUTION (2.8)

**Known:** A static force, F, is applied to the tooth of a gear that is keyed to a shaft.

**Find:** Identify the stresses in the key, and write an equation for each. State the assumptions, and discuss briefly their effects.

**Schematic and Given Data:**

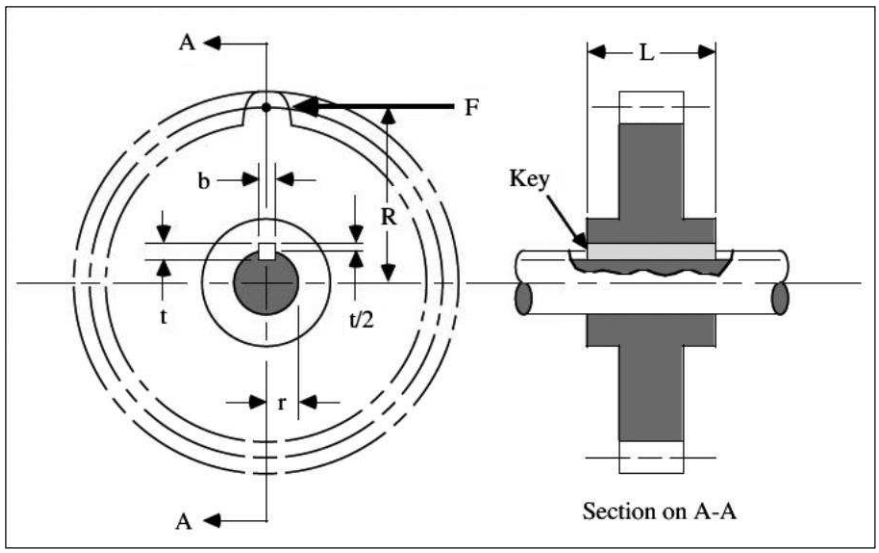


**Assumption:** The compressive forces on each side of the key are uniform.

**Analysis:**

1. <u>Compression on key sides</u>

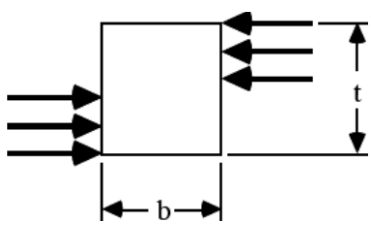


$$\left(\sigma_c \cdot L \cdot \frac{t}{2}\right) r \approx FR;$$

Hence, $\sigma_c \approx \dfrac{2FR}{(L)\,(t)\,(r)}$ or more precisely,

$$\sigma_c L \cdot \frac{t}{2}\left(r - \frac{t}{4}\right) = FR$$

so, $\sigma_c = \dfrac{2FR}{Lt\,(r - t/4)}$



Fundamentals of Machine Component Design 7th edition Juvinall Solutions Manual

2. Key shear

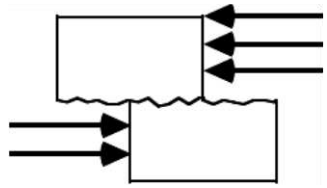

$\tau\,(bL)r = FR$; hence, $\tau = \dfrac{FR}{bLr}$

**Comment:** The compressive forces on each side of the key will most probably not be uniform because of key cocking.

---

SOLUTION (RP2.8)

**Known:** A screw with a square thread is transmitting axial force F through a nut with n threads engaged.

**Find:** Identify the types of stresses in the threaded portion of the screw and write an equation for each. State the assumptions made, and discuss briefly their effect.

**Schematic and Given Data:**

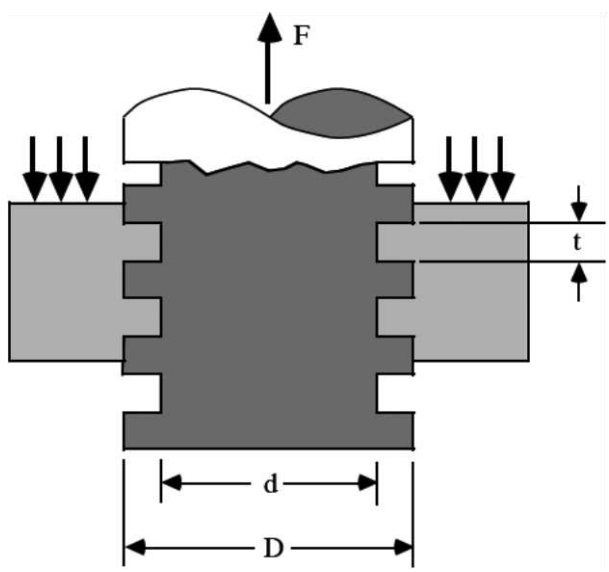


**Assumption:** The assumptions will be stated in the analysis section.

**Analysis:**

1. <u>Compression at interface.</u> Assuming uniform stress distribution, we have

$$\sigma = \frac{F}{\pi(D-d)n}$$ ■



Fundamentals of Machine Component Design 7th edition Juvinall Solutions Manual

(The bending of the thread would tend to concentrate the stress toward the inside diameter and also produce a tensile stress at the thread root. Geometric inaccuracy may concentrate the load at one portion of a thread.)

2. Shear at the base of threads. Assuming uniform distribution of $\tau$ across the cylindrical failure surface, we have

$$\tau = \frac{F}{\pi dnt} \qquad \blacksquare$$

(The stress concentration would create a higher stress in the thread root. The effect of thread helix angle is neglected.)



Fundamentals of Machine Component Design 7th edition Juvinall Solutions Manual

SOLUTION (2.9)

**Known:** A total gas force F is applied to the top of a piston.

**Find:**

(a) Copy the drawing and sketch the force paths through the piston, through the piston pin, and into the connecting rod.

(b) Identify the stresses in the piston pin and write an equation for each. State the assumptions made, and discuss briefly their effect.

**Schematic and Given Data:**

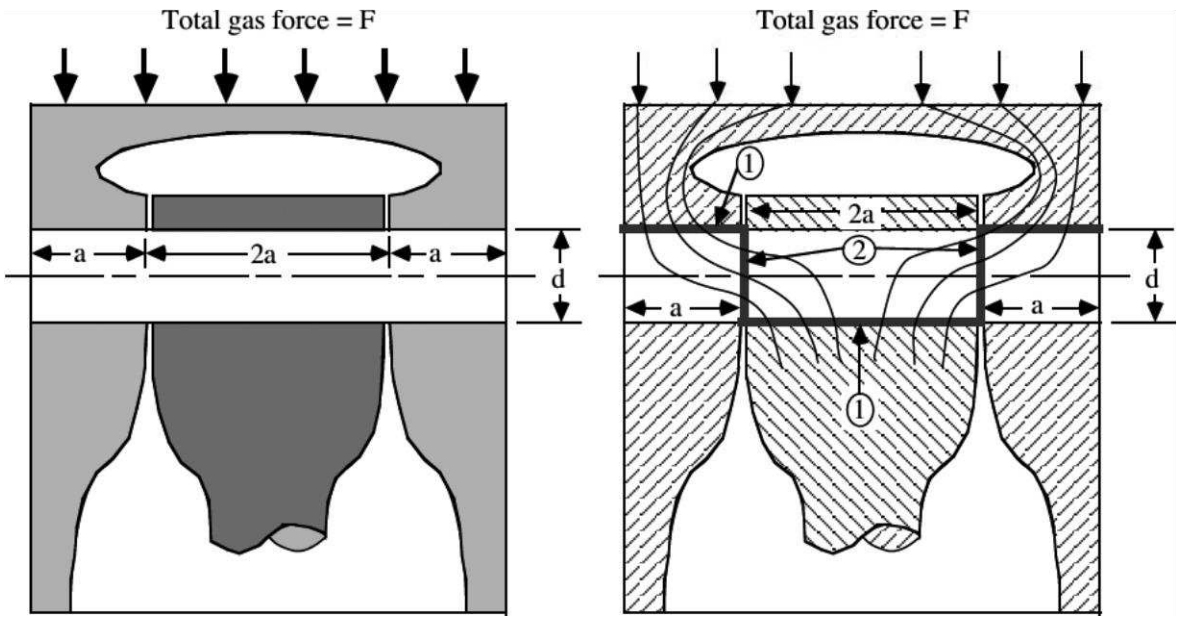


**Assumption:** The assumptions are stated in the analysis section.

**Analysis:**

1. Compression with piston and with rod: $\sigma = \dfrac{\text{Force}}{\text{Projected area}} = \dfrac{F^*}{2ad}$ ■

2. Transverse shear stress, $\tau = \dfrac{2F^{\Delta}}{\pi d^2}$ (for a solid pin) ■

3. Bending of pin (stresses depend on fit and rigidity of the members.)

$^*$ Assumes uniform axial distribution of stress which would not be strictly true due to pin bending.

$^{\Delta}$ Assumes uniform stress distribution. Actual stresses may be greater at top and bottom.



Fundamentals of Machine Component Design 7th edition Juvinall Solutions Manual

SOLUTION (RP2.9)

**Known:** A force P is applied to an engine crankshaft by a connecting rod. The shaft is supported by main bearings A and B. Torque is transmitted to an attached member through flange F.

**Find:**

(a) Draw the shaft, and show all loads necessary to place it in equilibrium as a free-body.

(b) Starting with P and following the force paths through the shaft to the flange, identify the locations of potentially critical stresses.

(c) Making appropriate simplifying assumptions, write an equation for each.

**Schematic and Given Data:**

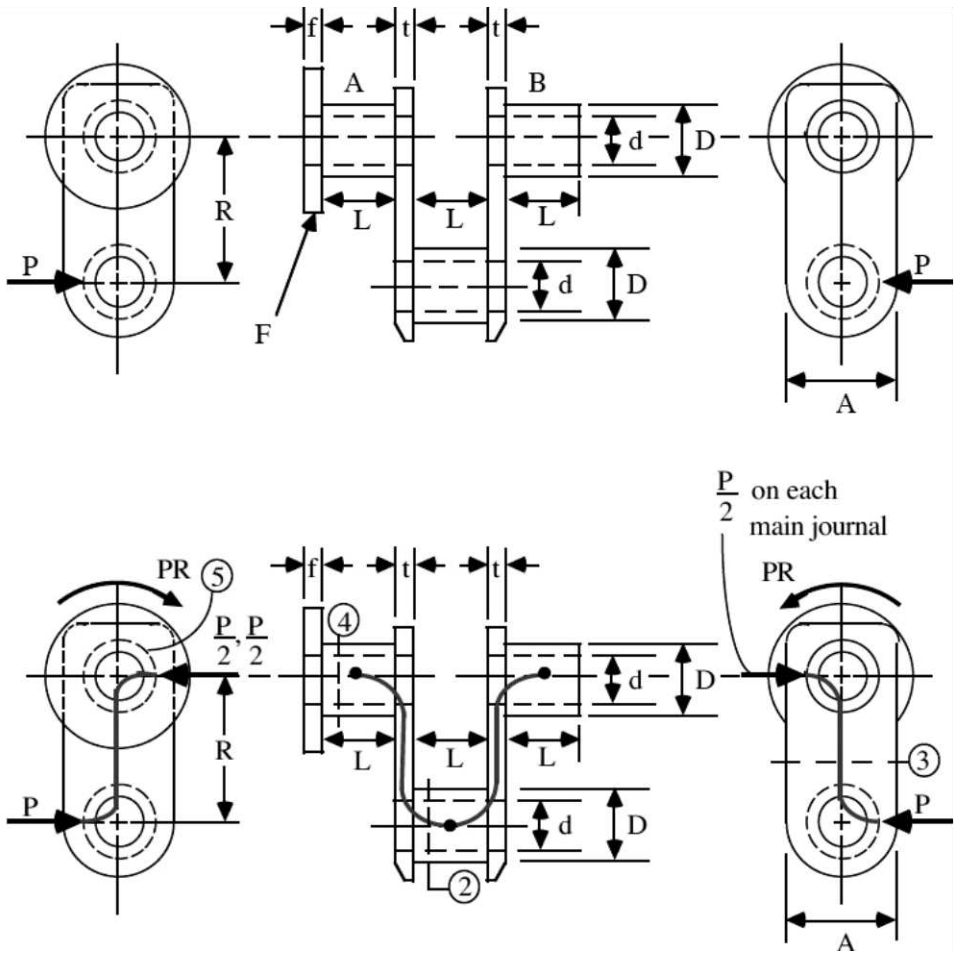


**Analysis:**

1. Where "P" is applied to the crankpin, the compressive stress (assuming uniform stress distribution) is given by:

$$\sigma = \frac{P}{\text{Projected Area}} = P/DL$$



Fundamentals of Machine Component Design 7th edition Juvinall Solutions Manual

2. The shear stress at section 2 (assuming uniform stress distribution) is:

$$\tau = \frac{P}{2\pi(D^2 - d^2)/4} : \ \tau = \frac{2P}{\pi(D^2 - d^2)}$$

3. The shear stress at section 3 (assuming a uniform distribution): $\tau = P/2tA$
4. The torsional stress at section 4 (neglecting stress concentration):

$$\tau = \frac{Tc}{J} = \frac{(PR)(D/2)}{\frac{\pi}{32}(D^4 - d^4)} = \frac{16PRD}{\pi(D^4 - d^4)}$$

5. The shear stress at cylindrical section 5:

$$\tau = \frac{T}{\pi Df(D/2)} = \frac{2PR}{\pi D^2 f}$$

6. Bending stresses are also present, the magnitudes of which depend on rigidities of the shaft and associated components, and on the fits between these components.

---



Fundamentals of Machine Component Design 7th edition Juvinall Solutions Manual

SOLUTION (2.10)

**Known:** A "T" bracket, attached to a fixed surface by four bolts, is loaded at point E.

**Find:**

(a) Copy the drawing and sketch paths of force flow going to each bolt.
(b) Determine the division of load among the four bolts.

**Schematic and Given Data:**

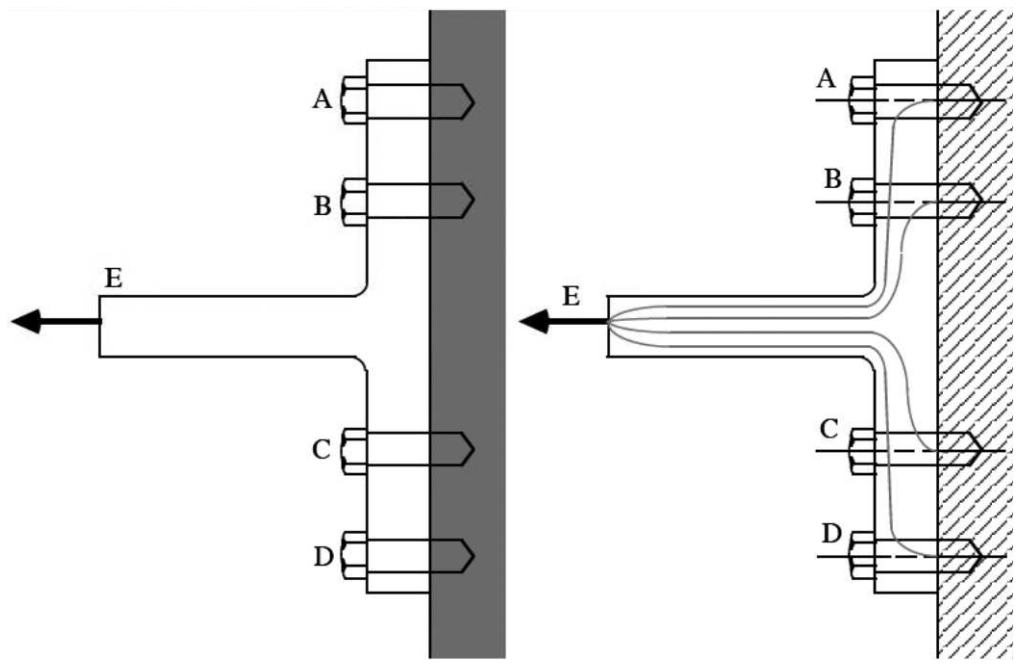


**Assumptions**

1. The T-bracket deflection is negligible.
2. The stiffness between point E and the plate through bolts B and C is twice the stiffness between point E and the plate through bolts A and D.

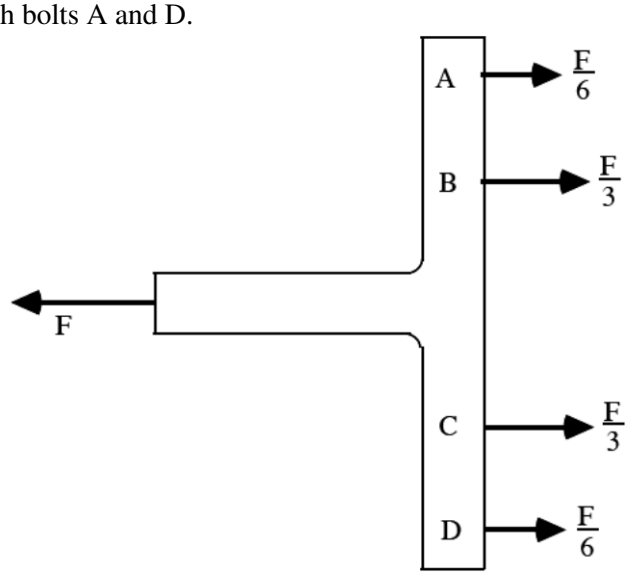




Fundamentals of Machine Component Design 7th edition Juvinall Solutions Manual

**Analysis:**

1. The force flow is shown in the above schematic.
2. If all "springs" deflect equally, bolts "B" and "C" each carry twice the load of bolts "A" and "D".

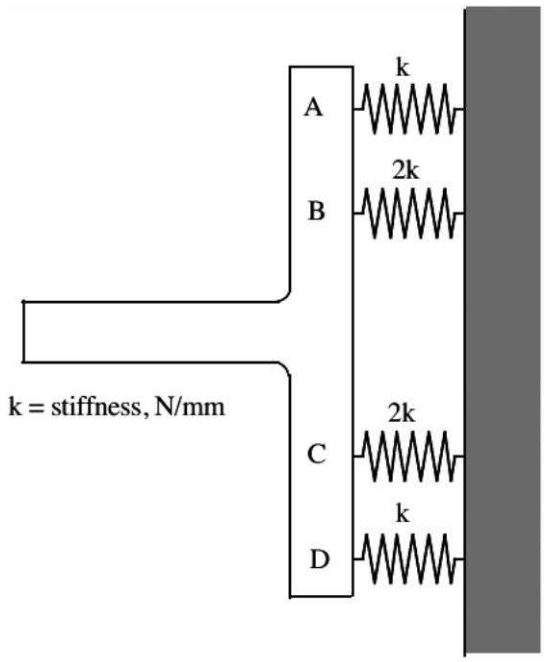


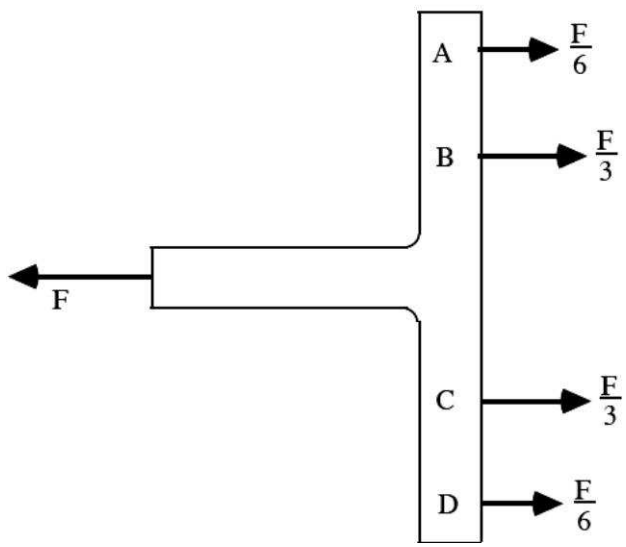




Fundamentals of Machine Component Design 7th edition Juvinall Solutions Manual

SOLUTION (RP2.10)

**Known:** A stiff horizontal bar, supported by four identical springs, is subjected to a known center load.

**Find:** Determine the load applied to each spring.

**Schematic and Given Data:**

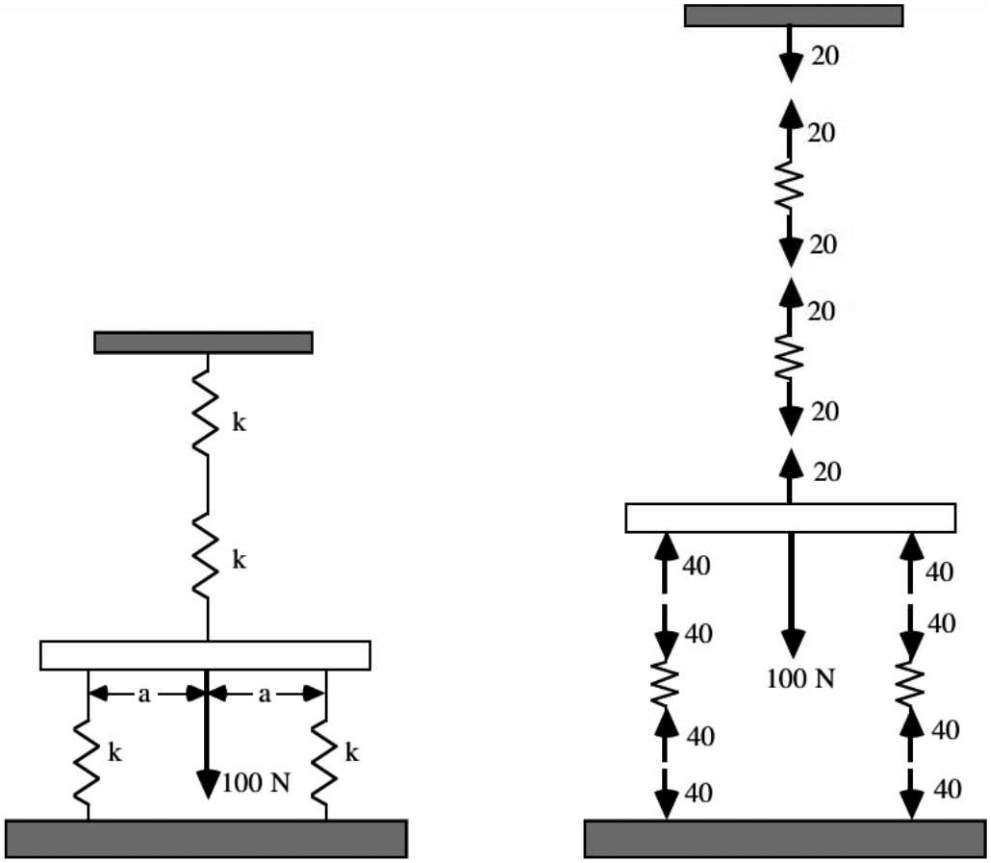


**Assumption:** The k of the horizontal bar is much greater than the k of the springs.

**Analysis:**

1. The upper springs each deflect only half as much as the lower springs, hence they carry only half as much load.
2. Let L = load carried by each lower spring. Then,
   2L + L/2 = 100 N and L = 40 N
3. In summary, the lower springs carry 40 N, the upper springs 20 N. ■



Fundamentals of Machine Component Design 7th edition Juvinall Solutions Manual

SOLUTION (RP2.11)

**Known:** Two plates are joined with straps and a single row of rivets (or bolts). Plates, straps, and rivets are all made of ductile steel having yield strengths in tension, compression, and shear of 284, 284, and 160 MPa respectively.

**Find:**

(a) Calculate the force F that can be transmitted across the joint per pitch P, of joint width, based on the rivet shear strength.

(b) Determine minimum values of t, t′, and P that will permit the total joint to transmit this same force (thus giving a balanced design).

(c) Determine the efficiency of the joint (ratio of joint strength to strength of a continuous plate).

**Schematic and Given Data:**

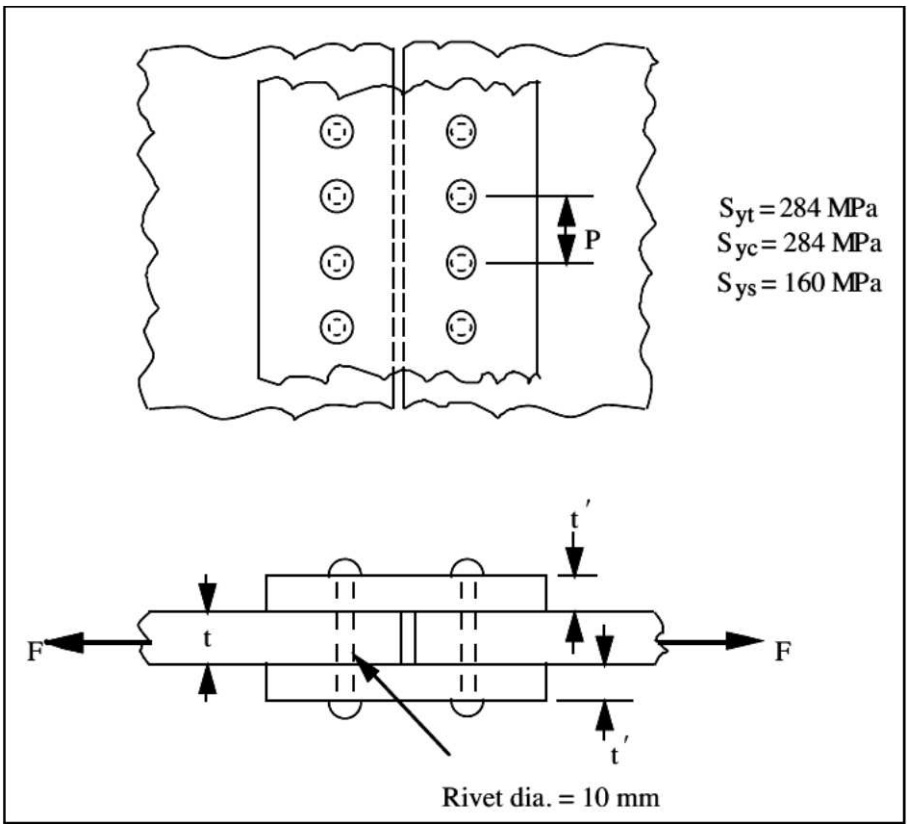


**Assumption:** The frictional forces between the plates and straps are negligible.

**Analysis:**

(a) Each pitch involves transmitting force "F" through 1 rivet in double shear:

$$F = 2\left(\frac{\pi d^2}{4}\right)\cdot S_{ys} = 2\,(25\pi\ \text{mm}^2)(160\ \text{MPa}) = 25{,}133\ \text{N}$$ ■

(b) For plate and strap to have equal tensile strength and equal compressive strength (at rivet interface), t = 2t′.



Fundamentals of Machine Component Design 7th edition Juvinall Solutions Manual

The compressive load carrying capacity (at rivet interface) is
F = Projected area · $S_{yc}$:
25,133 N = 10 t $mm^2$ · 284 MPa. Hence, t = 8.85 mm; t′ = 4.425 mm. ■

The tensile load carrying capacity (at rivet interface) is F = (P − 10) t · $S_{yt}$ :
25,133 N = (P − 10)(8.85) $mm^2$ · 284 MPa.
Hence, P = 20 mm. ■

(c) $$\text{Efficiency} = \frac{\text{Joint strength}}{\text{Strength of a continuous plate}} = \frac{25{,}133}{S_{yt}(t)(P)} =$$

$$\frac{25{,}133}{(284\ \text{MPa})(8.85\ \text{mm})(20\ \text{mm})} = 0.50 = 50\%$$

■



Fundamentals of Machine Component Design 7th edition Juvinall Solutions Manual