Design of Machinery 6th edition Norton Solutions Manual

SKU: 9781260113310-SOLUTIONS

PROBLEM 2-1

Statement: Find three (or other number as assigned) of the following common devices. Sketch careful kinematic diagrams and find their total degrees of freedom.

a. An automobile hood hinge mechanism
b. An automobile hatchback lift mechanism
c. An electric can opener
d. A folding ironing board
e. A folding card table
f. A folding beach chair
g. A baby swing
h. A folding baby walker
i. A fancy corkscrew as shown in Figure P2-9
j. A windshield wiper mechanism
k. A dump-truck dump mechanism
l. A trash truck dumpster mechanism
m. A pickup tailgate mechanism
n. An automobile jack
o. A collapsible auto radio antenna

Solution: See Mathcad file P0201.

Equation 2.1c is used to calculate the mobility (*DOF*) of each of the models below.

a. An automobile hood hinge mechanism.

The hood (3) is linked to the body (1) through two rocker links (2 and 4).

Number of links $L := 4$

Number of full joints $J_1 := 4$

Number of half joints $J_2 := 0$

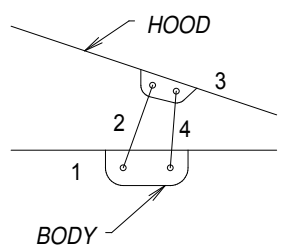

$$M := 3\cdot(L - 1) - 2\cdot J_1 - J_2$$

$$M = 1$$

b. An automobile hatchback lift mechanism.

The hatch (2) is pivoted on the body (1) and is linked to the body by the lift arm, which can be modeled as two links (3 and 4) connected through a translating slider joint.

Design of Machinery 6th edition Norton Solutions Manual

Number of links $L := 4$

Number of full joints $J_1 := 4$

Number of half joints $J_2 := 0$

$$M := 3\cdot(L - 1) - 2\cdot J_1 - J_2$$

$$M = 1$$

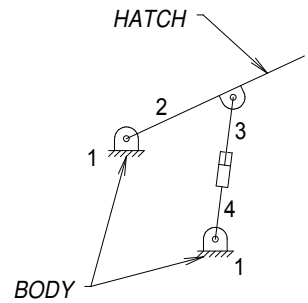

c. An electric can opener has 2 *DOF*.

d. A folding ironing board.

The board (1) itself has one pivot (full) joint and one pin-in-slot sliding (half) joint. The two legs (2 and 3) have a common pivot. One leg connects to the pivot joint on the board and the other to the slider joint.

Number of links $L := 3$

Number of full joints $J_1 := 2$

Number of half joints $J_2 := 1$

$$M := 3\cdot(L - 1) - 2\cdot J_1 - J_2$$

$$M = 1$$

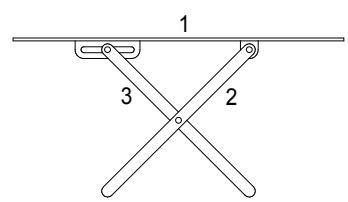

e. A folding card table has 7 *DOF*: One for each leg, 2 for location in *xy* space, and one for angular orientation.

f. A folding beach chair.

The seat (3) and the arms (6) are ternary links. The seat is linked to the front leg(2), the back (5) and a coupling link (4). The arms are linked to the front leg (2), the rear leg (1), and the back (5). Links 1, 2, 4, and 5 are binary links. The analysis below is appropriate when the chair is not fully opened. When fully opened, one or more links are prevented from moving by a stop. Subtract 1 DOF when forced against the stop.

Number of links $L := 6$

Number of full joints $J_1 := 7$

Number of half joints $J_2 := 0$

$$M := 3\cdot(L - 1) - 2\cdot J_1 - J_2$$

$$M = 1$$

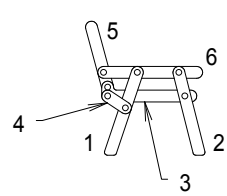

g. A baby swing has 4 *DOF*: One for the angular orientation of the swing with respect to the frame, and 3 for the location and orientation of the frame with respect to a 2-D frame.

Design of Machinery 6th edition Norton Solutions Manual

h. A folding baby walker has 4 *DOF*: One for the degree to which it is unfolded, and 3 for the location and orientation of the walker with respect to a 2-D frame.

i. A fancy corkscrew has 2 *DOF*: The screw can be rotated and the arms rotate to translate the screw.

j. A windshield wiper mechanism has 1 *DOF*: The position of the wiper blades is defined by a single input.

k. A dump-truck dump mechanism has 1 *DOF*: The angle of the dump body is determined by the length of the hydraulic cylinder that links it to the body of the truck.

l. A trash truck dumpster mechanism has 2 *DOF*: These are generally a rotation and a translation.

m. A pickup tailgate mechanism has 1 *DOF*:

n. An automobile jack has 4 *DOF*: One is the height of the jack and the other 3 are the position and orientation of the jack with respect to a 2-D frame.

o. A collapsible auto radio antenna has as many *DOF* as there are sections, less one.

Design of Machinery 6th edition Norton Solutions Manual

PROBLEM 2-2

Statement: How many DOF do you have in your wrist and hand combined?

Solution: See Mathcad file P0202.

1. Holding the palm of the hand level and facing toward the floor, the hand can be rotated about an axis through the wrist that is parallel to the floor (and perpendicular to the forearm axis) and one perpendicular to the floor (2 *DOF*). The wrist can rotate about the forearm axis (1 *DOF*).
2. Each finger (and thumb) can rotate up and down and side-to-side about the first joint. Additionally, each finger can rotate about each of the two remaining joints for a total of 4 *DOF* for each finger (and thumb).
3. Adding all *DOF*, the total is

Wrist	1
Hand	2
Thumb	4
Fingers 4x4	16
TOTAL	23

Design of Machinery 6th edition Norton Solutions Manual

PROBLEM 2-3

Statement: How many *DOF* do the following joints have?

a. Your knee
b. Your ankle
c. Your shoulder
d. Your hip
e. Your knuckle

Solution: See Mathcad file P0203.

a. Your knee.

1 *DOF*: A rotation about an axis parallel to the ground.

b. Your ankle.

3 *DOF*: Three rotations about mutually perpendicular axes.

c. Your shoulder.

3 *DOF*: Three rotations about mutually perpendicular axes.

d. Your hip.

3 *DOF*: Three rotations about mutually perpendicular axes.

e Your knuckle.

2 *DOF*: Two rotations about mutually perpendicular axes.

Design of Machinery 6th edition Norton Solutions Manual

PROBLEM 2-4

Statement: How many DOF do the following have in their normal environment?

a. A submerged submarine

b. An earth-orbit satellite

c. A surface ship

d. A motorcycle (road bike)

e. A two-button mouse

f. A computer joy stick.

Solution: See Mathcad file P0204.

a. A submerged submarine.
Using a coordinate frame attached to earth, or an inertial coordinate frame, a submarine has 6 *DOF*: 3 linear coordinates and 3 angles.

b. An earth-orbit satellite.
If the satellite was just a particle it would have 3 *DOF*. But, since it probably needs to be oriented with respect to the earth, sun, etc., it has 6 *DOF*.

c. A surface ship.
There is no difference between a submerged submarine and a surface ship, both have 6 *DOF*. One might argue that, for an earth-centered frame, the depth of the ship with respect to mean sea level is constant, however that is not strictly true. A ship's position is generally given by two coordinates (longitude and latitude). For a given position, a ship can also have pitch, yaw, and roll angles. Thus, for all practical purposes, *a surface ship has 5 DOF*.

d. A motorcycle.
At an intersection, the motorcycle's position is given by two coordinates. In addition, it will have some heading angle (turning a corner) and roll angle (if turning). Thus, there are 4 *DOF*.

e. A two-button mouse.
A two-button mouse has *4 DOF*. It can move in the x and y directions and each button has *1 DOF*.

f. A computer joy stick.
The joy stick has 2 *DOF* (x and y) and orientation, for a total of 3 *DOF*.

Design of Machinery 6th edition Norton Solutions Manual

PROBLEM 2-5

Statement: Are the joints in Problem 2-3 force closed or form closed?

Solution: See Mathcad file P0205.

They are force closed by ligaments that hold them together. None are geometrically closed.

Design of Machinery 6th edition Norton Solutions Manual

PROBLEM 2-6

Statement: Describe the motion of the following items as pure rotation, pure translation, or complex planar motion.

a. A windmill
b. A bicycle (in the vertical plane, not turning)
c. A conventional "double-hung" window
d. The keys on a computer keyboard
e. The hand of a clock
f. A hockey puck on the ice
g. A "casement" window

Solution: See Mathcad file P0206.

a. A windmill.
Pure rotation.

b. A bicycle (in the vertical plane, not turning).
Pure translation for the frame, complex planar motion for the wheels.

c. A conventional "double-hung" window.
Pure translation.

d. The keys on a computer keyboard.
Pure translation.

e. The hand of a clock.
Pure rotation.

f. A hockey puck on the ice.
Complex planar motion.

g. A "casement" window.
Pure rotation.

Design of Machinery 6th edition Norton Solutions Manual

PROBLEM 2-7

Statement: Calculate the mobility of the linkages assigned from Figure P2-1 part 1 and part 2.

Solution: See Figure P2-1 and Mathcad file P0207.

1. Use equation 2.1c (Kutzbach's modification) to calculate the mobility.

a. Number of links $L := 6$

Number of full joints $J_1 := 7$

Number of half joints $J_2 := 1$

$M := 3\cdot(L - 1) - 2\cdot J_1 - J_2$

$M = 0$

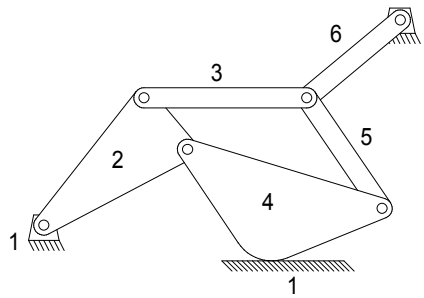

(a)

b. Number of links $L := 3$

Number of full joints $J_1 := 2$

Number of half joints $J_2 := 1$

$M := 3\cdot(L - 1) - 2\cdot J_1 - J_2$

$M = 1$

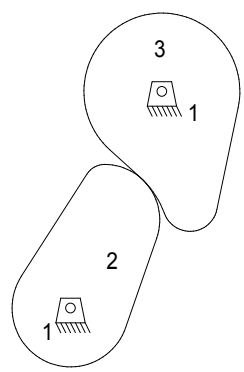

(b)

c. Number of links $L := 4$

Number of full joints $J_1 := 4$

Number of half joints $J_2 := 0$

$M := 3\cdot(L - 1) - 2\cdot J_1 - J_2$

$M = 1$

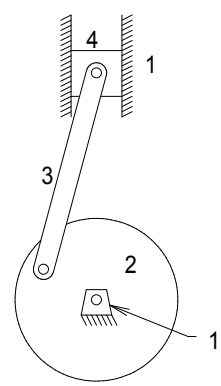

(c)

Design of Machinery 6th edition Norton Solutions Manual

d. Number of links $L := 7$

Number of full joints $J_1 := 7$

Number of half joints $J_2 := 1$

$$M := 3\cdot(L - 1) - 2\cdot J_1 - J_2$$

$$M = 3$$

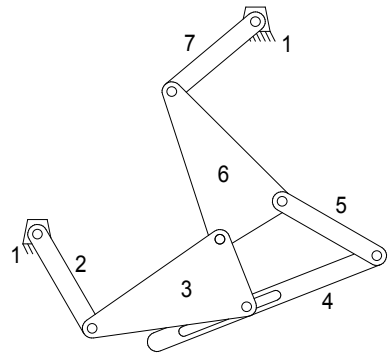

(d)

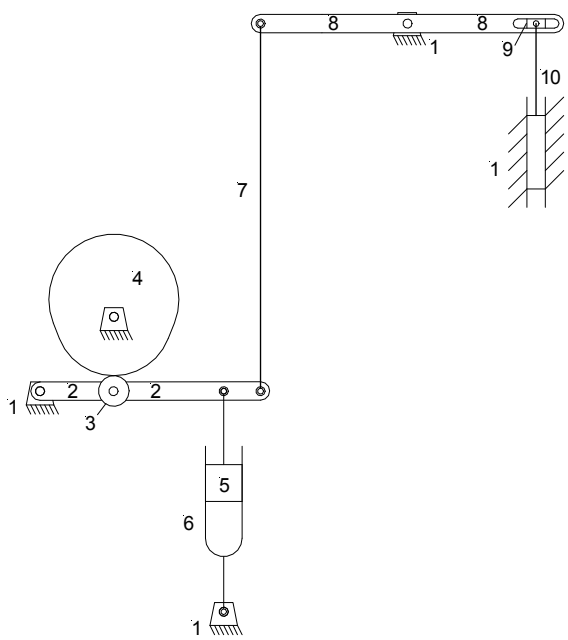

(e)

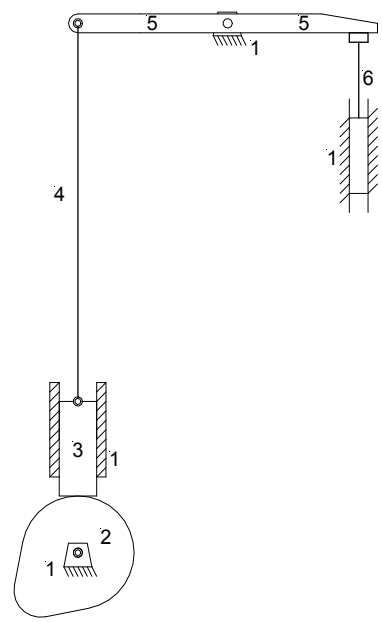

(f)

e. Number of links $L := 10$

Number of full joints $J_1 := 13$

Number of half joints $J_2 := 0$

$$M := 3\cdot(L - 1) - 2\cdot J_1 - J_2$$

$$M = 1$$

f. Number of links $L := 6$

Number of full joints $J_1 := 6$

Number of half joints $J_2 := 2$

$$M := 3\cdot(L - 1) - 2\cdot J_1 - J_2$$

$$M = 1$$

Design of Machinery 6th edition Norton Solutions Manual

g. Number of links $L := 8$

Number of full joints $J_1 := 9$

Number of half joints $J_2 := 2$

$M := 3 \cdot (L - 1) - 2 \cdot J_1 - J_2$

$M = 1$

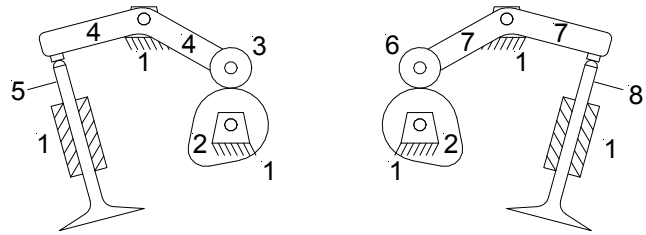

(g)

h. Number of links $L := 4$

Number of full joints $J_1 := 4$

Number of half joints $J_2 := 0$

$M := 3 \cdot (L - 1) - 2 \cdot J_1 - J_2$

$M = 1$

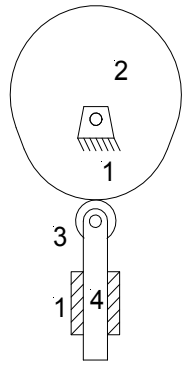

(h)

Design of Machinery 6th edition Norton Solutions Manual

PROBLEM 2-8

Statement: Identify the items in Figure P2-1 as mechanisms, structures, or preloaded structures.

Solution: See Figure P2-1 and Mathcad file P0208.

1. Use equation 2.1c (Kutzbach's modification) to calculate the mobility and the definitions in Section 2.5 of the text to classify the linkages.

a. Number of links $L := 6$

Number of full joints $J_1 := 7$

Number of half joints $J_2 := 1$

$M := 3 \cdot (L - 1) - 2 \cdot J_1 - J_2$

$M = 0$ Structure

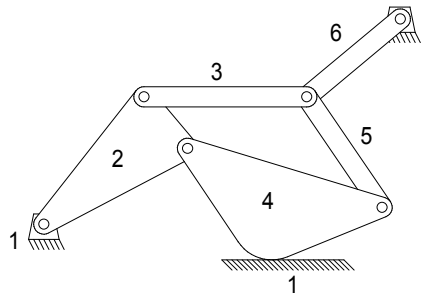

(a)

b. Number of links $L := 3$

Number of full joints $J_1 := 2$

Number of half joints $J_2 := 1$

$M := 3 \cdot (L - 1) - 2 \cdot J_1 - J_2$

$M = 1$ Mechanism

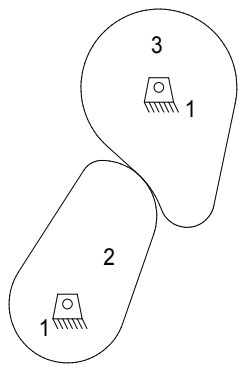

(b)

c. Number of links $L := 4$

Number of full joints $J_1 := 4$

Number of half joints $J_2 := 0$

$M := 3 \cdot (L - 1) - 2 \cdot J_1 - J_2$

$M = 1$ Mechanism

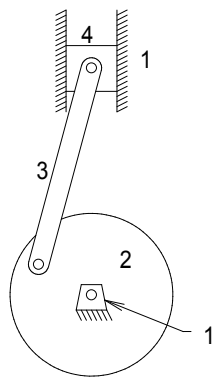

(c)

Design of Machinery 6th edition Norton Solutions Manual

d. Number of links $L := 7$

Number of full joints $J_1 := 7$

Number of half joints $J_2 := 1$

$M := 3 \cdot (L - 1) - 2 \cdot J_1 - J_2$

$M = 3$ Mechanism

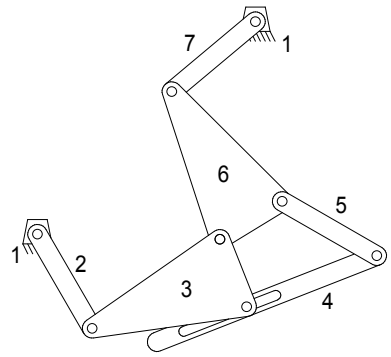

(d)

PROBLEM 2-9

Statement: Use linkage transformation on the linkage of Figure P2-1a to make it a 1-*DOF* mechanism.

Solution: See Figure P2-1a and Mathcad file P0209.

1. The mechanism in Figure P2-1a has mobility:

Number of links $L := 6$

Number of full joints $J_1 := 7$

Number of half joints $J_2 := 1$

$M := 3 \cdot (L - 1) - 2 \cdot J_1 - J_2$

$M = 0$

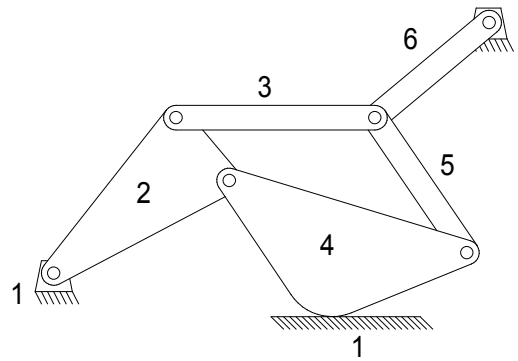

2. Use rule 2, which states: "Any full joint can be replaced by a half joint, but this will increase the *DOF* by one." One way to do this is to replace one of the pin joints with a pin-in-slot joint such as that shown in Figure 2-3c. Choosing the joint between links 2 and 4, we now have mobility:

Number of links $L := 6$

Number of full joints $J_1 := 6$

Number of half joints $J_2 := 2$

$M := 3 \cdot (L - 1) - 2 \cdot J_1 - J_2$

$M = 1$

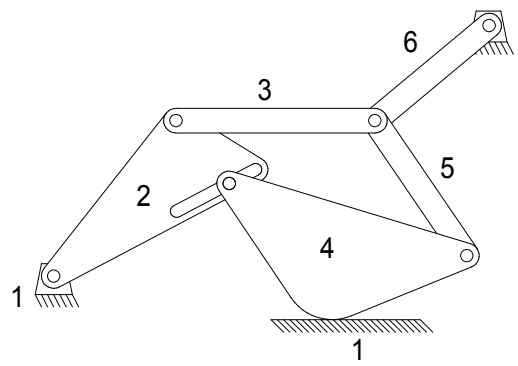

Design of Machinery 6th edition Norton Solutions Manual

PROBLEM 2-10

Statement: Use linkage transformation on the linkage of Figure P2-1d to make it a 2-*DOF* mechanism.

Solution: See Figure P2-1d and Mathcad file P0210.

1. The mechanism in Figure P2-1d has mobility:

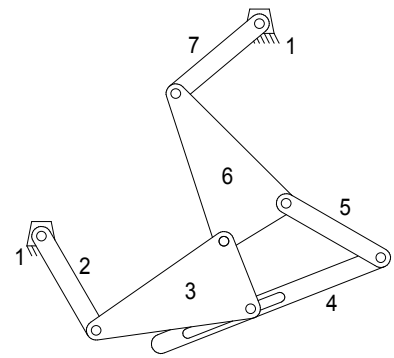

Number of links $L := 7$

Number of full joints $J_1 := 7$

Number of half joints $J_2 := 1$

$$M := 3\cdot(L - 1) - 2\cdot J_1 - J_2$$

$$M = 3$$

2. Use rule 3, which states: "Removal of a link will reduce the *DOF* by one." One way to do this is to remove link 7 such that link 6 pivots on the fixed pin attached to the ground link (1). We now have mobility:

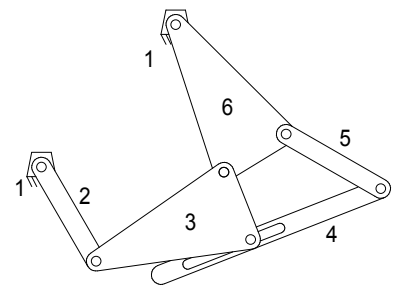

Number of links $L := 6$

Number of full joints $J_1 := 6$

Number of half joints $J_2 := 1$

$$M := 3\cdot(L - 1) - 2\cdot J_1 - J_2$$

$$M = 2$$

Design of Machinery 6th edition Norton Solutions Manual

PROBLEM 2-11

Statement: Use number synthesis to find all the possible link combinations for 2-*DOF*, up to 9 links, to hexagonal order, using only revolute joints.

Solution: See Mathcad file P0211.

1. Use equations 2.4a and 2.6 with $DOF = 2$ and iterate the solution for valid combinations. Note that the number of links must be odd to have an even *DOF* (see Eq. 2.4). The smallest possible 2-*DOF* mechanism is then 5 links since three will give a structure (the delta triplet, see Figure 2-7).

$$L := B + T + Q + P + H \qquad L - 3 - M := T + 2\cdot Q + 3\cdot P + 4\cdot H \qquad M := 2$$

$$L - 5 := T + 2\cdot Q + 3\cdot P + 4\cdot H$$

2. For $L := 5$

$$0 := T + 2\cdot Q + 3\cdot P + 4\cdot H \qquad 0 = T = Q = P = H \qquad B := 5$$

3. For $L := 7$

$$2 := T + 2\cdot Q + 3\cdot P + 4\cdot H \qquad H := 0 \qquad P := 0$$

Case 1: $Q := 0$ $\quad T := 2 - 2\cdot Q - 3\cdot P - 4\cdot H \quad T = 2$

$B := L - T - Q - P - H \quad B = 5$

Case 2: $Q := 1$ $\quad T := 2 - 2\cdot Q - 3\cdot P - 4\cdot H \quad T = 0$

$B := L - T - Q - P - H \quad B = 6$

4. For $L := 9$

$$4 := T + 2\cdot Q + 3\cdot P + 4\cdot H$$

Case 1: $H := 1$ $\quad T := 0 \quad Q := 0 \quad P := 0$

$B := L - T - Q - P - H \quad B = 8$

Case 2a: $H := 0$ $\quad 4 := T + 2\cdot Q + 3\cdot P$

$9 := B + T + Q + P$

Case 2b: $P := 1$ $\quad 1 := T + 2\cdot Q \quad Q := 0 \quad T := 1$

$B := L - T - Q - P - H \quad B = 7$

Case 2c: $P := 0$ $\quad 4 := T + 2\cdot Q$

$9 := B + T + Q$

Case 2c1: $Q := 2$ $\quad T := 4 - 2\cdot Q \quad T = 0$

$B := 9 - T - Q \quad B = 7$

Case 2c2: $Q := 1$ $\quad T := 4 - 2\cdot Q \quad T = 2$

$B := 9 - T - Q \quad B = 6$

Case 2c3: $Q := 0$ $\quad T := 4 - 2\cdot Q \quad T = 4$

$B := 9 - T - Q \quad B = 5$

Design of Machinery 6th edition Norton Solutions Manual

PROBLEM 2-12

Statement: Find all of the valid isomers of the eightbar 1-*DOF* link combinations in Table 2-2 (p. 38) having:

a. Four binary and four ternary links.

b. Five binaries, two ternaries, and one quaternary link.

c. Six binaries and two quaternary links.

d. Six binaries, one ternary, and one pentagonal link.

Solution: See Mathcad file P0212.

1. Table 2-3 lists 16 possible isomers for an eightbar chain. However, Table 2-2 shows that there are five possible link sets, four of which are listed above. Therefore, we expect that the 16 valid isomers are distributed among the five link sets and that there will be fewer than 16 isomers among the four link sets listed above.
2. One method that is helpful in finding isomers is to represent the linkage in terms of molecules as defined in Franke's Condensed Notations for Structural Synthesis. A summary of the rules for obtaining Franke's molecules follows:

   (1) The links of order greater than 2 are represented by circles.

   (2) A number is placed within each circle (the "valence" number) to describe the type (ternary, quaternary, etc.) of link.

   (3) The circles are connected using straight lines. The number of straight lines emanating from a circle must be equal to its valence number.

   (4) Numbers (0, 1, 2, etc.) are placed on the straight lines to correspond to the number of binary links used in connecting the higher order links.

   (5) There is one-to-one correspondence between the molecule and the kinematic chain that it represents.

a. Four binary and four ternary links.

Draw 4 circles with valence numbers of 3 in each. Then find all unique combinations of straight lines that can be drawn that connect the circles such that there are exactly three lines emanating from each circle and the total of the numbers written on the lines is exactly equal to 4. In this case, there are three valid isomers as depicted by Franke's molecules and kinematic chains below.

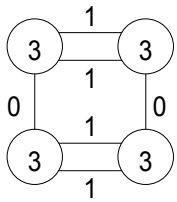

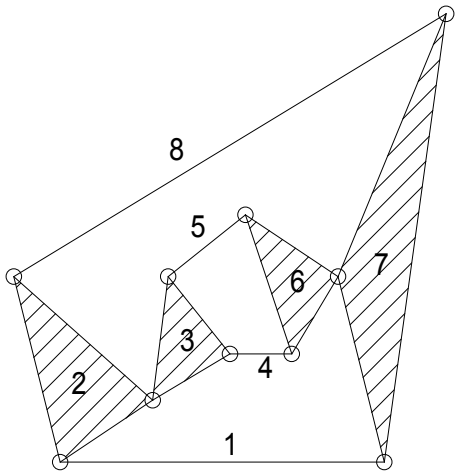

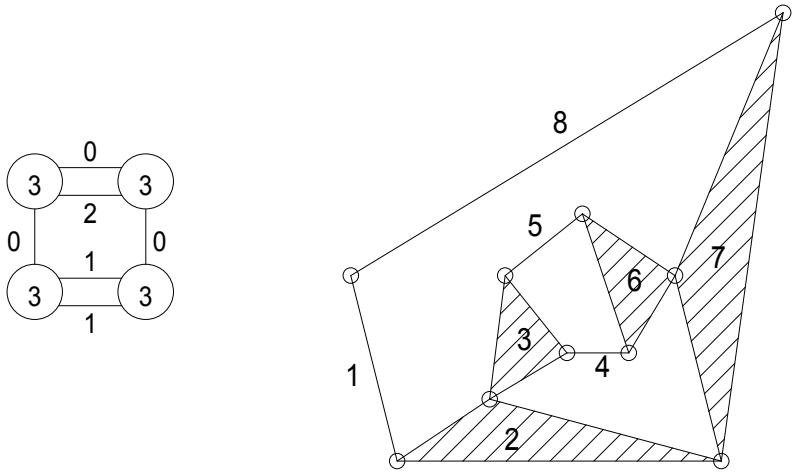

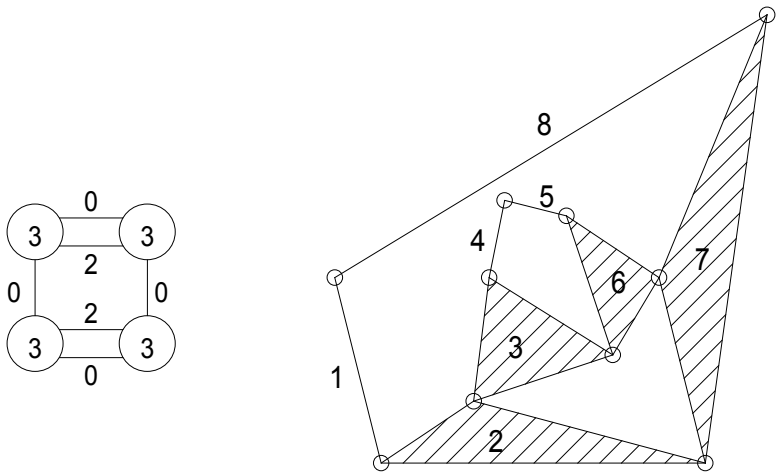

The mechanism shown in Figure P2-5b is the same eightbar isomer as that depicted schematically above.

b. Five binaries, two ternaries, and one quaternary link.

Draw 2 circles with valence numbers of 3 in each and one with a valence number of 4. Then find all unique combinations of straight lines that can be drawn that connect the circles such that there are exactly three lines emanating from each circle with valence of three and four lines from the circle with valence of four; and the total of the numbers written on the lines is exactly equal to 5. In this case, there are five valid isomers as depicted by Franke's molecules and kinematic chains below.

Design of Machinery 6th edition Norton Solutions Manual

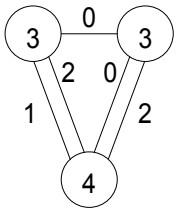
3
0
3
2
0
1
2
4

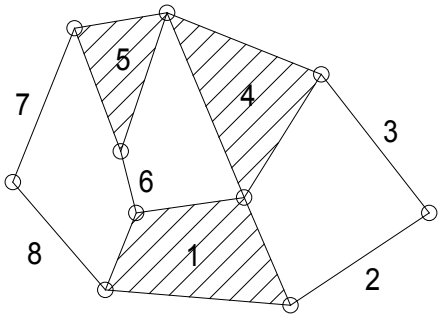
5
4
7
3
6
8
1
2

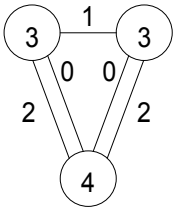
3
1
3
0
0
2
2
4

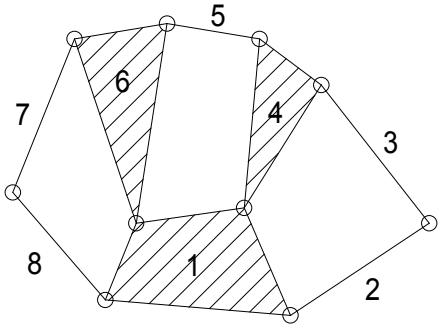
5
6
7
4
3
8
1
2

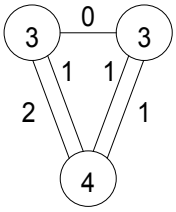
3
0
3
1
1
2
1
4

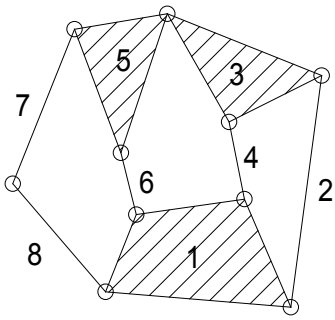
5
3
7
4
6
2
8
1

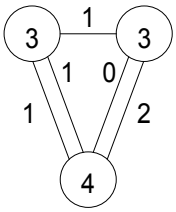
3
1
3
1
0
1
2
4

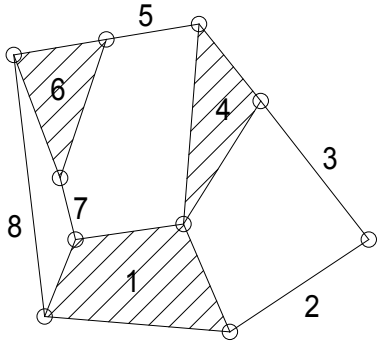
5
6
4
3
7
8
1
2

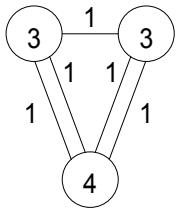

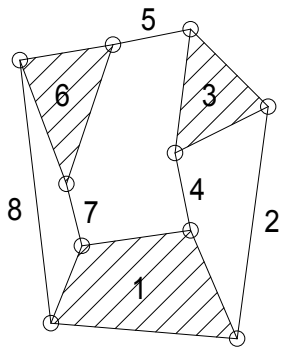

c. Six binaries and two quaternary links.

Draw 2 circles with valence numbers of 4 in each. Then find all unique combinations of straight lines that can be drawn that connect the circles such that there are exactly four lines emanating from each circle and the total of the numbers written on the lines is exactly equal to 6. In this case, there are two valid isomers as depicted by Franke's molecules and kinematic chains below.

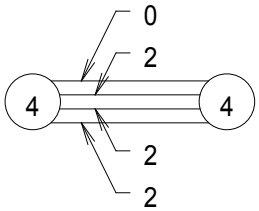

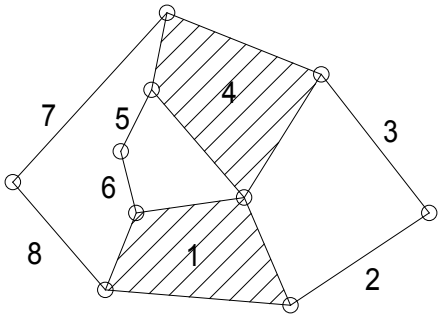

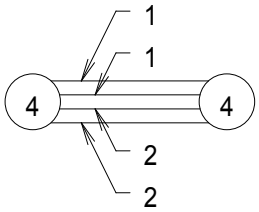

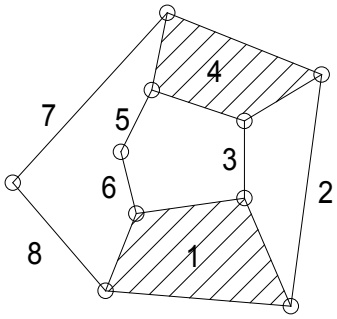

d. Six binaries, one ternary, and one pentagonal link.

There are no valid implementations of 6 binary links with 1 pentagonal link.

Design of Machinery 6th edition Norton Solutions Manual

PROBLEM 2-13

Statement: Use linkage transformation to create a 1-*DOF* mechanism with two sliding full joints from a Stephenson's sixbar linkage as shown in Figure 2-14a (p. 47).

Solution: See Figure 2-14a and Mathcad file P0213.

1. The mechanism in Figure 2-14a has mobility:

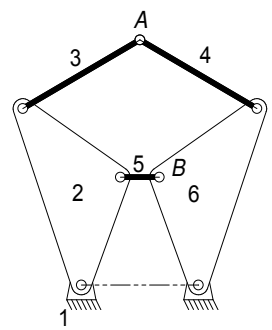

Number of links $L := 6$

Number of full joints $J_1 := 7$

Number of half joints $J_2 := 0$

$$M := 3\cdot(L - 1) - 2\cdot J_1 - J_2$$

$$M = 1$$

2. Use rule 1, which states: "Revolute joints in any loop can be replaced by prismatic joints with no change in *DOF* of the mechanism, provided that at least two revolute joints remain in the loop." One way to do this is to replace pin joints at *A* and *B* with translating full slider joints such as that shown in Figure 2-3b.

Note that the sliders are attached to links 3 and 5 in such a way that they cannot rotate relative to the links. The number of links and 1-*DOF* joints remains the same. There are no 2-*DOF* joints in either mechanism.

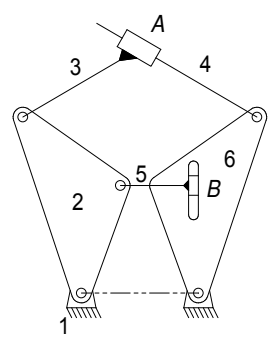

Design of Machinery 6th edition Norton Solutions Manual

PROBLEM 2-14

Statement: Use linkage transformation to create a 1-*DOF* mechanism with one sliding full joint a half joint from a Stephenson's sixbar linkage as shown in Figure 2-14b (p. 48).

Solution: See Figure 2-14a and Mathcad file P0213.

1. The mechanism in Figure 2-14b has mobility:

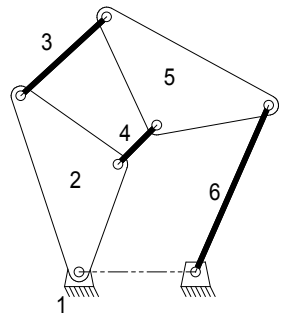

Number of links $L := 6$

Number of full joints $J_1 := 7$

Number of half joints $J_2 := 0$

$$M := 3\cdot(L - 1) - 2\cdot J_1 - J_2$$

$$M = 1$$

2. To get the sliding full joint, use rule 1, which states: "Revolute joints in any loop can be replaced by prismatic joints with no change in *DOF* of the mechanism, provided that at least two revolute joints remain in the loop." One way to do this is to replace pin joint links 3 and 5 with a translating full slider joint such as that shown in Figure 2-3b.

Note that the slider is attached to link 3 in such a way that it cannot rotate relative to the link. The number of links and 1-*DOF* joints remains the same.

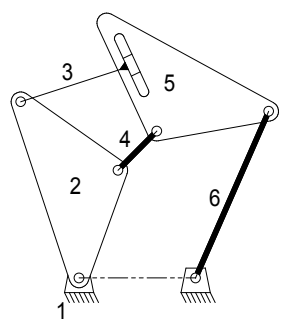

3. To get the half joint, use rule 4 on page 42, which states: "The combination of rules 2 and 3 above will keep the original *DOF* unchanged." One way to do this is to remove link 6 (and its two nodes) and insert a half joint between links 5 and 1.

Number of links $L := 5$

Number of full joints $J_1 := 5$

Number of half joints $J_2 := 1$

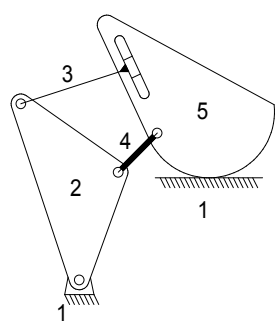

$$M := 3\cdot(L - 1) - 2\cdot J_1 - J_2$$

$$M = 1$$

Design of Machinery 6th edition Norton Solutions Manual

PROBLEM 2-15

Statement: Calculate the Grashof condition of the fourbar mechanisms defined below. Build cardboard models of the linkages and describe the motions of each inversion. Link lengths are in inches (or double given numbers for centimeters).

Part 1.

a.	2	4.5	7	9
b.	2	3.5	7	9
c.	2	4.0	6	8

Part 2.

d.	2	4.5	7	9
e.	2	4.0	7	9
f.	2	3.5	7	9

Solution: See Mathcad file P0215

1. Use inequality 2.8 to determine the Grashof condition.

$$Condition(a,b,c,d) := \left| \begin{array}{l} S \leftarrow min(a,b,c,d) \\ L \leftarrow max(a,b,c,d) \\ SL \leftarrow S + L \\ PQ \leftarrow a + b + c + d - SL \\ return \ \text{"Grashof"} \ \ if \ \ SL < PQ \\ return \ \text{"Special Grashof"} \ \ if \ \ SL = PQ \\ return \ \text{"non-Grashof"} \ \ otherwise \end{array} \right.$$

a. $Condition(2,4.5,7,9) = \text{"Grashof"}$

b. $Condition(2,3.5,7,9) = \text{"non-Grashof"}$

c. $Condition(2,4.0,6,8) = \text{"Special Grashof"}$

This is a special case Grashof since the sum of the shortest and longest is equal to the sum of the other two link lengths.

d. $Condition(2,4.5,7,9) = \text{"Grashof"}$

e. $Condition(2,4.9,7,9) = \text{"Grashof"}$

f. $Condition(2,3.5,7,9) = \text{"non-Grashof"}$

Design of Machinery 6th edition Norton Solutions Manual

PROBLEM 2-16

Statement: Which type(s) of electric motor would you specify

a. To drive a load with large inertia.
b. To minimize variation of speed with load variation.
c. To maintain accurate constant speed regardless of load variations.

Solution: See Mathcad file P0216.

a. Motors with high starting torque are suited to drive large inertia loads. Those with this characteristic include series-wound, compound-wound, and shunt-wound DC motors, and capacitor-start AC motors.

b. Motors with flat torque-speed curves (in the operating range) will minimize variation of speed with load variation. Those with this characteristic include shunt-wound DC motors, and synchronous and capacitor-start AC motors.

b. Speed-controlled DC motors will maintain accurate constant speed regardless of load variations.

Design of Machinery 6th edition Norton Solutions Manual

PROBLEM 2-17

Statement: Describe the difference between a cam-follower (half) joint and a pin joint.

Solution: See Mathcad file P0217.

1. A pin joint has one rotational *DOF*. A cam-follower joint has 2 *DOF*, rotation and translation. The pin joint also captures its lubricant in the annulus between pin and bushing while the cam-follower joint squeezes its lubricant out of the joint.

Design of Machinery 6th edition Norton Solutions Manual

PROBLEM 2-18

Statement: Examine an automobile hood hinge mechanism of the type described in Section 2.14. Sketch it carefully. Calculate its *DOF* and Grashof condition. Make a cardboard model. Analyze it with a free-body diagram. Describe how it keeps the hood up.

Solution: Solution of this problem will depend upon the specific mechanism modeled by the student.

Design of Machinery 6th edition Norton Solutions Manual

PROBLEM 2-19

Statement: Find an adjustable arm desk lamp of the type shown in Figure P2-2. Sketch it carefully. Measure it and sketch it to scale. Calculate its *DOF* and Grashof condition. Make a cardboard model. Analyze it with a free-body diagram. Describe how it keeps itself stable. Are there any positions in which it loses stability? Why?

Solution: Solution of this problem will depend upon the specific mechanism modeled by the student.

Design of Machinery 6th edition Norton Solutions Manual

PROBLEM 2-20

Statement: The torque-speed curve for a 1/8 hp permanent magnet (PM) DC motor is shown in Figure P2-3. The rated speed for this fractional horsepower motor is 2500 rpm at a rated voltage of 130V.

Determine:

a) The rated torque in oz-in (ounce-inches, the industry standard for fractional hp motors)

b) The no-load speed

c) Plot the power-torque curve and determine the maximum power that the motor can deliver.

Given: Rated speed, N_R $\quad N_R := 2500 \cdot rpm$ $\quad$ Rated power, H_R $\quad H_R := \frac{1}{8} \cdot hp$

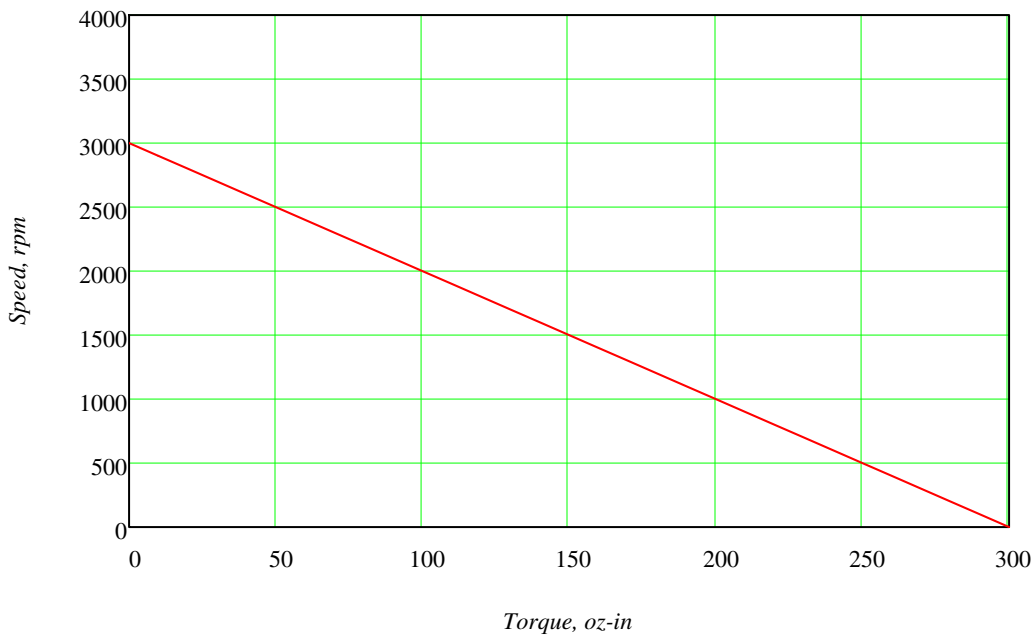

Figure P2-3 Torque-speed Characteristic of a 1/8 HP, 2500 rpm PM DC Motor

Solution: See Figure P2-3 and Mathcad file P0220.

a. The rated torque is found by dividing the rated power by the rated speed:

Rated torque, T_R $\quad T_R := \frac{H_R}{N_R}$ $\quad T_R = 50 \cdot ozf \cdot in$

b. The no-load speed occurs at $T = 0$. From the graph this is 3000 rpm.

c. The power is the product of the speed and the torque. From the graph the equation for the torque-speed curve is:

$$N(T) := -\frac{3000 \cdot rpm}{300 \cdot ozf \cdot in} \cdot T + 3000 \cdot rpm$$

and the power, therefore, is:

Design of Machinery 6th edition Norton Solutions Manual

$$H(T) := -10 \cdot \frac{rpm}{ozf \cdot in} \cdot T^2 + 3000 \cdot rpm \cdot T$$

Plotting the power as a function of torque over the range $T := 0 \cdot ozf \cdot in, 10 \cdot ozf \cdot in .. 300 \cdot ozf \cdot in$

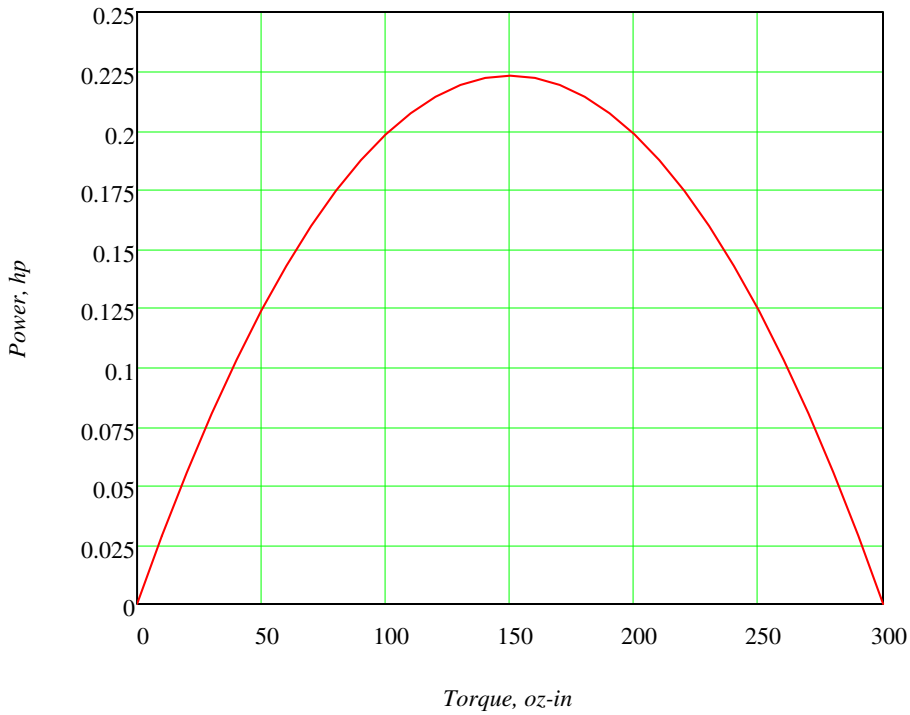

Maximum power occurs when $dH/dT = 0$. The value of T at maximum power is:

Value of T at H_{max}	$T_{Hmax} := 3000 \cdot rpm \cdot \frac{ozf \cdot in}{2 \cdot 10 \cdot rpm}$	$T_{Hmax} = 150 \cdot ozf \cdot in$
Maximum power	$H_{max} := H(T_{Hmax})$	$H_{max} = 0.223 \cdot hp$
Speed at max power	$N_{Hmax} := N(T_{Hmax})$	$N_{Hmax} = 1500 \cdot rpm$

Note that the curve goes through the rated power point of 0.125 hp at the rated torque of 50 oz-in.

PROBLEM 2-21

Statement: Find the mobility of the mechanisms in Figure P2-4.

Solution: See Figure P2-4 and Mathcad file P0221.

1. Use equation 2.1c (Kutzbach's modification) to calculate the mobility.

a. This is a basic fourbar linkage. The input is link 2 and the output is link 4. The cross-hatched pivot pins at $O2$ and $O4$ are attached to the ground link (1).

Number of links $L := 4$

Number of full joints $J_1 := 4$

Number of half joints $J_2 := 0$

$$M := 3\cdot(L - 1) - 2\cdot J_1 - J_2$$

$$M = 1$$

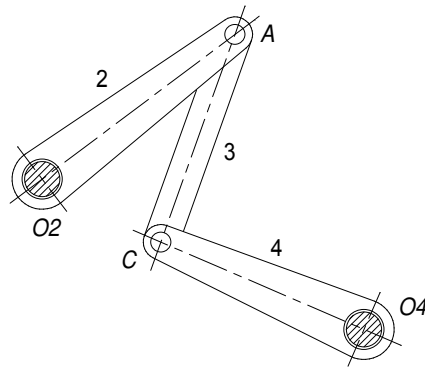

b. This is a fourbar linkage. The input is link 2, which in this case is the wheel 2 with a pin at A, and the output is link 4. The cross-hatched pivot pins at $O2$ and $O4$ are attached to the ground link (1).

Number of links $L := 4$

Number of full joints $J_1 := 4$

Number of half joints $J_2 := 0$

$$M := 3\cdot(L - 1) - 2\cdot J_1 - J_2$$

$$M = 1$$

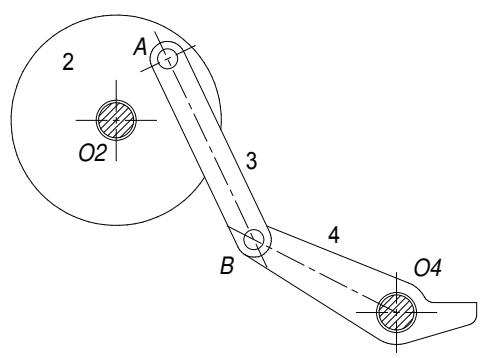

c. This is a 3-cylinder, rotary, internal combustion engine. The pistons (sliders) 6, 7, and 8 drive the output crank (2) through piston rods (couplers 3, 4, and 5). There are 3 full joints at the crank where rods 3, 4and 5 are pinned to crank 2. The cross-hatched crank-shaft at $O2$ is supported by the ground link (1) through bearings.

Design of Machinery 6th edition Norton Solutions Manual

Number of links $L := 8$

Number of full joints $J_1 := 10$

Number of half joints $J_2 := 0$

$$M := 3 \cdot (L - 1) - 2 \cdot J_1 - J_2$$

$$M = 1$$

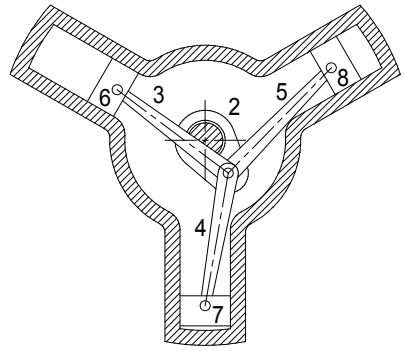

d. This is a fourbar linkage. The input is link 2, which in this case is a wheel with a pin at A, and the output is the vertical member on the coupler, link 3. Since the lengths of links 2 and 4 (O_2A and O_4B) are the same, the coupler link (3) has curvilinear motion and AB remains parallel to O_2O_4 throughout the cycle. The cross-hatched pivot pins at O_2 and O_4 are attached to the ground link (1).

Number of links $L := 4$

Number of full joints $J_1 := 4$

Number of half joints $J_2 := 0$

$$M := 3 \cdot (L - 1) - 2 \cdot J_1 - J_2$$

$$M = 1$$

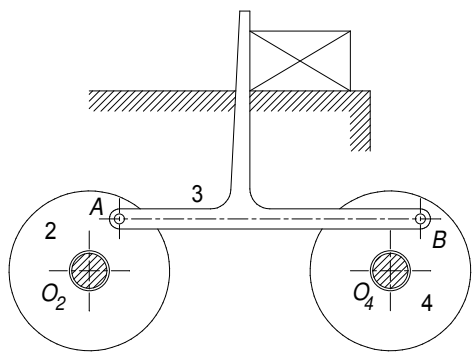

e. This is a fourbar linkage with an output dyad. The input (rocker) is link 2 and the output (rocker) is link 8. Links 5 and 6 are redundant, i.e. the mechanism will have the same motion if they are removed. The input fourbar consists of links 1, 2, 3, and 4. The output dyad consists of links 7 and 8. The cross-hatched pivot pins at *O2, O4* and *O*8 are attached to the ground link (1). In the calculation below, the redundant links and their joints are not counted (subtract 2 links and 4 joints from the totals).

Design of Machinery 6th edition Norton Solutions Manual

Number of links $L := 6$

Number of full joints $J_1 := 7$

Number of half joints $J_2 := 0$

$$M := 3\cdot(L - 1) - 2\cdot J_1 - J_2$$

$$M = 1$$

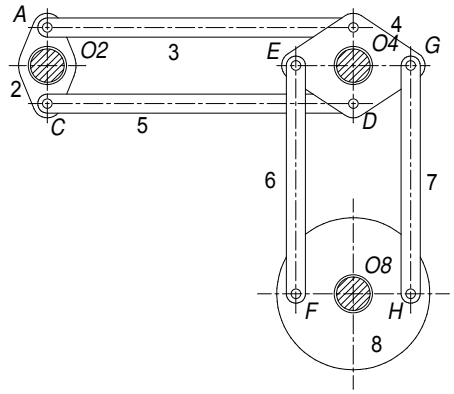

f. This is a fourbar offset slider-crank linkage. The input is link 2 (crank) and the output is link 4 (slider block). The cross-hatched pivot pin at $O2$ is attached to the ground link (1).

Number of links $L := 4$

Number of full joints $J_1 := 4$

Number of half joints $J_2 := 0$

$$M := 3\cdot(L - 1) - 2\cdot J_1 - J_2$$

$$M = 1$$

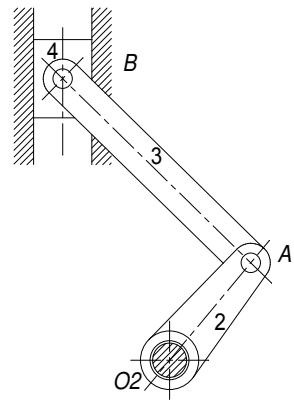

g. This is a fourbar linkage with an alternate output dyad. The input (rocker) is link 2 and the outputs (rockers) are links 4 and 6. The input fourbar consists of links 1, 2, 3, and 4. The alternate output dyad consists of links 5 and 6. The cross-hatched pivot pins at $O2$, $O4$ and $O6$ are attached to the ground link (1).

Number of links $L := 6$

Number of full joints $J_1 := 7$

Number of half joints $J_2 := 0$

$$M := 3\cdot(L - 1) - 2\cdot J_1 - J_2$$

$$M = 1$$

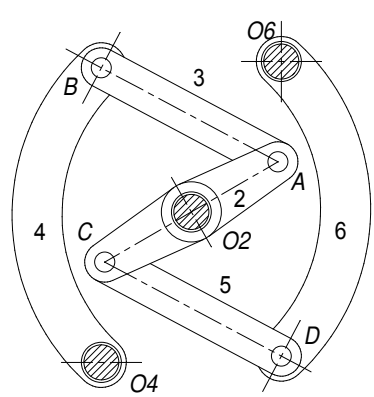

Design of Machinery 6th edition Norton Solutions Manual

h. This is a ninebar mechanism with three redundant links, which reduces it to a sixbar. Since this mechanism is symmetrical about a vertical centerline, we can split it into two mirrored mechanisms to analyze it. Either links 2, 3 and 5 or links 7, 8 and 9 are redundant. To analyze it, consider 7, 8 and 9 as the redundant links. Analyzing the ninebar, there are two full joints at the pins *A, B* and *C* for a total of 12 joints.

Number of links $L := 9$

Number of full joints $J_1 := 12$

Number of half joints $J_2 := 0$

$$M := 3\cdot(L - 1) - 2\cdot J_1 - J_2$$

$$M = 0$$

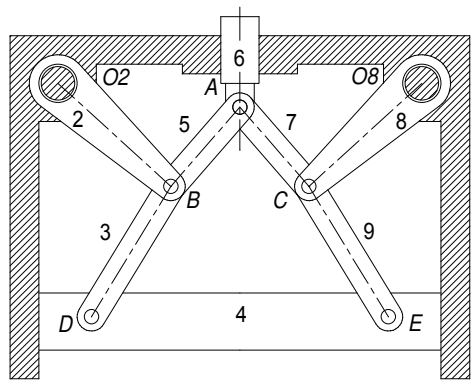

The result is that this mechanism seems to be a structure. By splitting it into mirror halves about the vertical centerline the mobility is found to be 1. Subtract the 3 redundant links and their 5 (6 minus the joint at *A*) associated joints to determine the mobility of the mechanism.

Number of links $L := 9 - 3$

Number of full joints $J_1 := 12 - 5$

Number of half joints $J_2 := 0$

$$M := 3\cdot(L - 1) - 2\cdot J_1 - J_2$$

$$M = 1$$

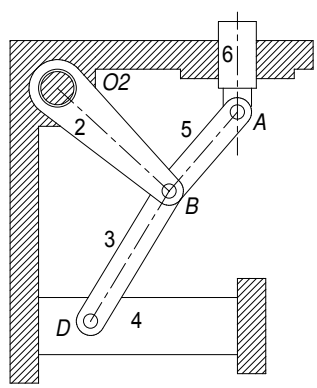

Design of Machinery 6th edition Norton Solutions Manual

PROBLEM 2-22

Statement: Find the Grashof condition and Barker classifications of the mechanisms in Figure P2-4a, b, and d.

Solution: See Figure P2-4 and Mathcad file P0222.

1. Use inequality 2.8 to determine the Grashof condition and Table 2-4 to determine the Barker classification.

$$Condition(a,b,c,d) := \left| \begin{array}{l} S \leftarrow min(a,b,c,d) \\ L \leftarrow max(a,b,c,d) \\ SL \leftarrow S + L \\ PQ \leftarrow a + b + c + d - SL \\ return \ \text{"Grashof"} \quad if \ SL < PQ \\ return \ \text{"Special Grashof"} \quad if \ SL = PQ \\ return \ \text{"non-Grashof"} \quad otherwise \end{array} \right.$$

a. This is a basic fourbar linkage. The input is link 2 and the output is link 4. The cross-hatched pivot pins at $O2$ and $O4$ are attached to the ground link (1).

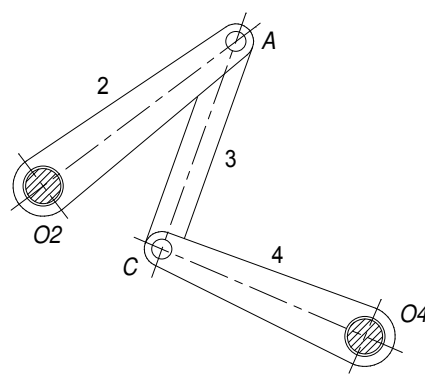

$L_1 := 174 \qquad L_2 := 116$

$L_3 := 108 \qquad L_4 := 110$

$Condition(L_1, L_2, L_3, L_4) = \text{"non-Grashof"}$

This is a Barker Type 5 RRR1 (non-Grashof, longest link grounded).

b. This is a fourbar linkage. The input is link 2, which in this case is the wheel with a pin at A, and the output is link 4. The cross-hatched pivot pins at $O2$ and $O4$ are attached to the ground link (1).

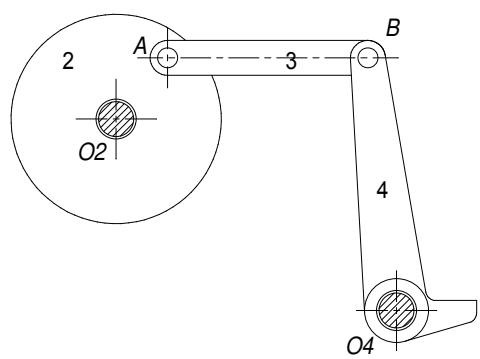

$L_1 := 162 \qquad L_2 := 40$

$L_3 := 96 \qquad L_4 := 122$

$Condition(L_1, L_2, L_3, L_4) = \text{"Grashof"}$

This is a Barker Type 2 GCRR (Grashof, shortest link is input).

Design of Machinery 6th edition Norton Solutions Manual

d. This is a fourbar linkage. The input is link 2, which in this case is a wheel with a pin at A, and the output is the vertical member on the coupler, link 3. Since the lengths of links 2 and 4 (O_2A and O_4B) are the same, the coupler link (3) has curvilinear motion and AB remains parallel to O_2O_4 throughout the cycle. The cross-hatched pivot pins at O_2 and O_4 are attached to the ground link (1).

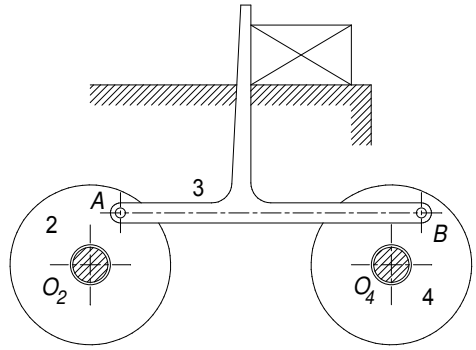

$L_1 := 150$ $L_2 := 30$

$L_3 := 150$ $L_4 := 30$

$Condition(L_1, L_2, L_3, L_4) =$ "Special Grashof"

This is a Barker Type 13 S2X (special case Grashof, two equal pairs, parallelogram).

Design of Machinery 6th edition Norton Solutions Manual

PROBLEM 2-23

Statement: Find the rotability of each loop of the mechanisms in Figure P2-4e, f, and g.

Solution: See Figure P2-4 and Mathcad file P0223.

1. Use inequality 2.15 to determine the rotability of each loop in the given mechanisms.

e. This is a fourbar linkage with an output dyad. The input (rocker) is link 2 and the output (rocker) is link 8. Links 5 and 6 are redundant, i.e. the mechanism will have the same motion if they are removed. The input fourbar consists of links 1, 2, 3, and 4. The output dyad consists of links 7 and 8. The cross-hatched pivot pins at *O*2, *O*4 and *O*8 are attached to the ground link (1). In the calculation below, the redundant links and their joints are not counted (subtract 2 links and 4 joints from the totals).

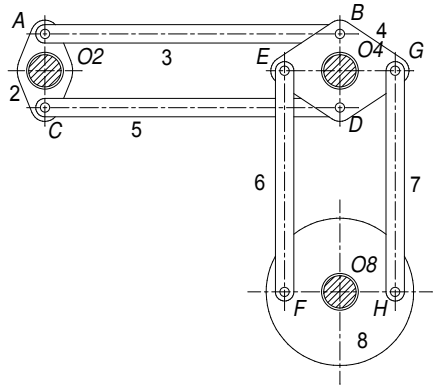

There are two loops in this mechanism. The first loop consists of links 1, 2, 3 (or 5), and 4. The second consists of links 1, 4, 7 (or 6), and 8. By inspection, we see that the sum of the shortest and longest in each loop is equal to the sum of the other two. Thus, both loops are Class III.

f. This is a fourbar offset slider-crank linkage. The input is link 2 (crank) and the output is link 4 (slider block). The cross-hatched pivot pin at *O*2 is attached to the ground link (1).

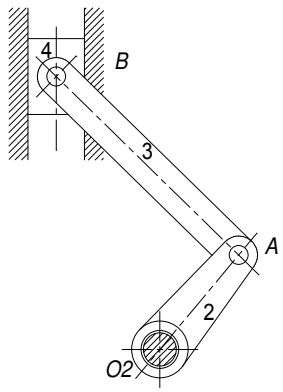

We can analyze this linkage if we replace the slider (4) with an infinitely long binary link that is pinned at B to link 3 and pinned to ground (1). Then links 1 and 4 for are both infinitely long. Since these two links are equal in length and, if we say they are finite in length but very long, the rotability of the mechanism will be determined by the relative lengths of 2 and 3. Thus, this is a Class I linkage since link 2 is shorter than link 3.

g. This is a fourbar linkage with an alternate output dyad. The input (rocker) is link 2 and the outputs (rockers) are links 4 and 6. The input fourbar consists of links 1, 2, 3, and 4. The alternate output dyad consists of links 5 and 6. The cross-hatched pivot pins at *O*2, *O*4 and *O*6 are attached to the ground link (1).

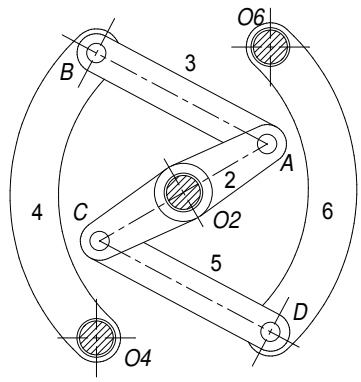

$r_1 := 87$ $r_2 := 49$

$r_3 := 100$ $r_4 := 153$

Using the notation of inequality 2.15, $N := 4$

Design of Machinery 6th edition Norton Solutions Manual

$L_N := r_4$ $L_1 := r_2$

$L_2 := r_1$ $L_3 := r_3$

$L_N + L_1 = 202$ $L_2 + L_3 = 187$

Since $L_N + L_1 > L_2 + L_3$, this is a class II mechanism.

Design of Machinery 6th edition Norton Solutions Manual

PROBLEM 2-24

Statement: Find the mobility of the mechanisms in Figure P2-5.

Solution: See Figure P2-5 and Mathcad file P0224.

1. Use equation 2.1c (Kutzbach's modification) to calculate the mobility. In the kinematic representations of the linkages below, binary links are depicted as single lines with nodes at their end points whereas higher order links are depicted as 2-D bars.

a. This is a sixbar linkage with 4 binary (1, 2, 5, and 6) and 2 ternary (3 and 4) links. The inverted U-shaped link at the top of Figure P2-5a is represented here as the binary link 6.

Number of links $L := 6$

Number of full joints $J_1 := 7$

Number of half joints $J_2 := 0$

$$M := 3\cdot(L - 1) - 2\cdot J_1 - J_2$$

$$M = 1$$

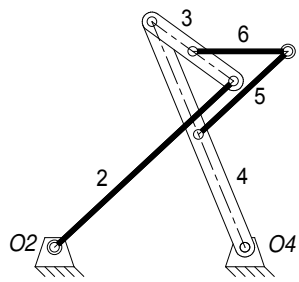

b. This is an eightbar linkage with 4 binary (1, 4, 7, and 8) and 4 ternary (2, 3, 5, and 6) links. The inverted U-shaped link at the top of Figure P2-5b is represented here as the binary link 8.

Number of links $L := 8$

Number of full joints $J_1 := 10$

Number of half joints $J_2 := 0$

$$M := 3\cdot(L - 1) - 2\cdot J_1 - J_2$$

$$M = 1$$

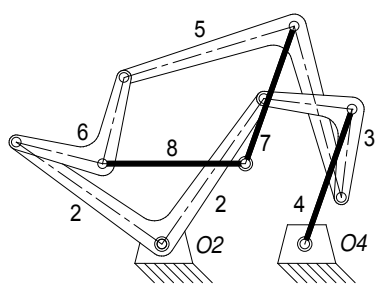

Design of Machinery 6th edition Norton Solutions Manual

PROBLEM 2-25

Statement: Find the mobility of the ice tongs in Figure P2-6.

a. When operating them to grab the ice block.

b. When clamped to the ice block but before it is picked up (ice grounded).

c. When the person is carrying the ice block with the tongs.

Solution: See Figure P2-6 and Mathcad file P0225.

1. Use equation 2.1c (Kutzbach's modification) to calculate the mobility.

a. In this case there are two links and one full joint and 1 *DOF*.

Number of links $L := 2$

Number of full joints $J_1 := 1$

Number of half joints $J_2 := 0$

$$M := 3\cdot(L - 1) - 2\cdot J_1 - J_2 \qquad M = 1$$

b. When the block is clamped in the tongs another link and two more full joints are added reducing the *DOF* to zero (the tongs and ice block form a structure).

Number of links $L := 2 + 1$

Number of full joints $J_1 := 1 + 2$

Number of half joints $J_2 := 0$

$$M := 3\cdot(L - 1) - 2\cdot J_1 - J_2 \qquad M = 0$$

c. When the block is being carried the system has at least 4 *DOF*: x, y, and z position and orientation about a vertical axis.

Design of Machinery 6th edition Norton Solutions Manual

PROBLEM 2-26

Statement: Find the mobility of the automotive throttle mechanism shown in Figure P2-7.

Solution: See Figure P2-7 and Mathcad file P0226.

1. This is an eightbar linkage with 8 binary links. It is assumed that the joint between the gas pedal (2) and the roller (3) that pivots on link 4 is a full joint, i.e. the roller rolls without slipping. The pivot pins at $O2$, $O4$, $O6$, and $O8$ are attached to the ground link (1). Use equation 2.1c (Kutzbach's modification) to calculate the mobility.

Number of links $L := 8$

Number of full joints $J_1 := 10$

Number of half joints $J_2 := 0$

$M := 3\cdot(L - 1) - 2\cdot J_1 - J_2$ $\qquad M = 1$

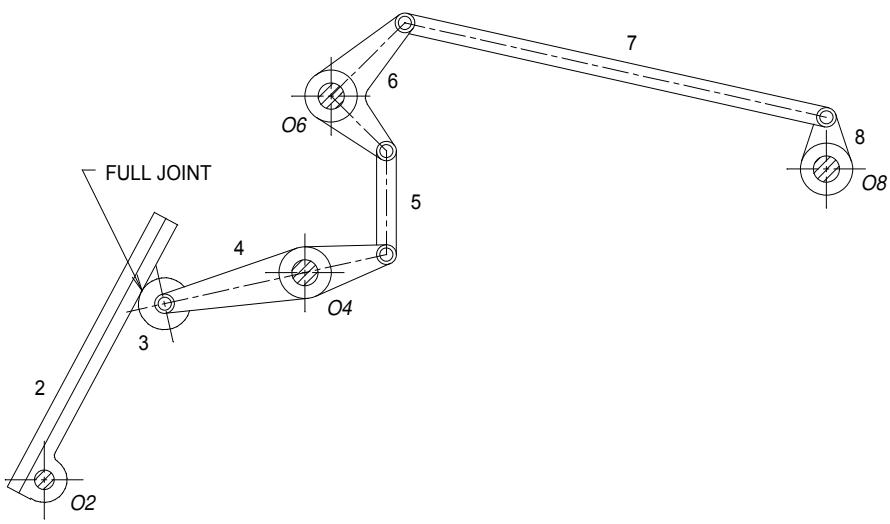

Design of Machinery 6th edition Norton Solutions Manual

PROBLEM 2-27

Statement: Sketch a kinematic diagram of the scissors jack shown in Figure P2-8 and determine its mobility. Describe how it works.

Solution: See Figure P2-8 and Mathcad file P0227.

1. The scissors jack depicted is a seven link mechanism with eight full and two half joints (see kinematic diagram below). Link 7 is a variable length link. Its length is changed by rotating the screw with the jack handle (not shown). The two blocks at either end of link 7 are an integral part of the link. The block on the left is threaded and acts like a nut. The block on the right is not threaded and acts as a bearing. Both blocks have pins that engage the holes in links 2, 3, 5, and 6. Joints *A* and *B* have 2 full joints a piece. For any given length of link 7 the jack is a structure ($DOF = 0$). When the screw is turned to give the jack a different height the jack has 1 *DOF*.

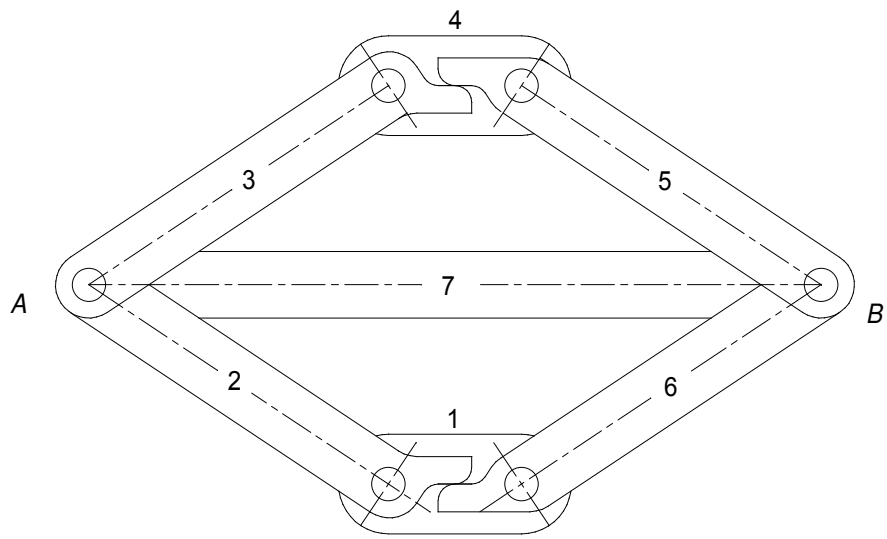

Number of links $L := 7$

Number of full joints $J_1 := 8$

Number of half joints $J_2 := 2$

$M := 3\cdot(L - 1) - 2\cdot J_1 - J_2$ $M = 0$

Design of Machinery 6th edition Norton Solutions Manual

PROBLEM 2-28

Statement: Find the mobility of the corkscrew in Figure P2-9.

Solution: See Figure P2-9 and Mathcad file P0228.

1. The corkscrew is made from 4 pieces: the body (1), the screw (2), and two arms with teeth (3), one of which is redundant. The second arm is present to balance the forces on the assembly but is not necessary from a kinematic standpoint. So, kinematically, there are 3 links (body, screw, and arm), 2 full joints (sliding joint between the screw and the body, and pin joint where the arm rotates on the body), and 1 half joint where the arm teeth engage the screw "teeth". Using equation 2.1c, the *DOF* (mobility) is

Number of links $L := 3$

Number of full joints $J_1 := 2$

Number of half joints $J_2 := 1$

$$M := 3\cdot(L - 1) - 2\cdot J_1 - J_2 \qquad M = 1$$

Design of Machinery 6th edition Norton Solutions Manual

PROBLEM 2-29

Statement: Figure P2-10 shows Watt's sun and planet drive that he used in his steam engine. The beam 2 is driven in oscillation by the piston of the engine. The planet gear is fixed rigidly to link 3 and its center is guided in the fixed track 1. The output rotation is taken from the sun gear 4. Sketch a kinematic diagram of this mechanism and determine its *DOF*. Can it be classified by the Barker scheme? If so, what Barker class and subclass is it?

Solution: See Figure P2-10 and Mathcad file P0229.

1. Sketch a kinematic diagram of the mechanism. The mechanism is shown on the left and a kinematic model of it is sketched on the right. It is a fourbar linkage with 1 *DOF* (see below).

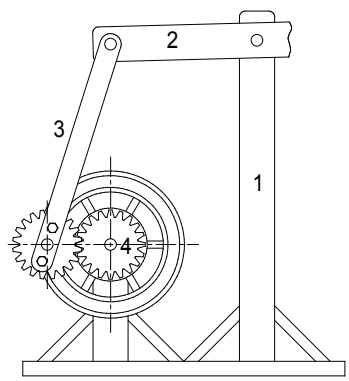

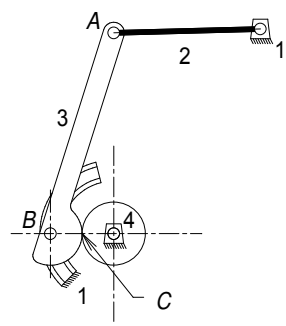

2. Use equation 2.1c to determine the *DOF* (mobility). There are 4 links, 3 full pin joints, 1 half pin-in-slot joint (at *B*), and 1 half joint (at the interface *C* between the two gears, shown above by their pitch circles). Links 1 and 3 are ternary.

Kutzbach's mobility equation (2.1c)

Number of links $L := 4$

Number of full joints $J_1 := 3$

Number of half joints $J_2 := 2$

$$M := 3\cdot(L - 1) - 2\cdot J_1 - J_2 \qquad M = 1$$

3. The Barker classification scheme requires that we have 4 link lengths. The motion of link 3 can be modeled by a basic fourbar if the half joint at *B* is replaced with a full pin joint and a link is added to connect *B* and the fixed pivot that is coincident with the center of curvature of the slot that guides pin *B*.

$L_1 := 2.15 \qquad L_2 := 1.25$

$L_3 := 1.80 \qquad L_4 := 0.54$

This is a Grashof linkage and the Barker classification is I-4 (type 4) because the shortest link is the output.

Design of Machinery 6th edition Norton Solutions Manual

PROBLEM 2-30

Statement: Figure P2-11 shows a bicycle hand brake lever assembly. Sketch a kinematic diagram of this device and draw its equivalent linkage. Determine its mobility. Hint: Consider the flexible cable to be a link.

Solution: See Figure P2-11 and Mathcad file P0230.

1. The motion of the flexible cable is along a straight line as it leaves the guide provided by the handle bar so it can be modeled as a translating full slider that is supported by the handlebar (link 1). The brake lever is a binary link that pivots on the ground link. Its other node is attached through a full pin joint to a third link, which drives the slider (link 4).

Number of links $L := 4$

Number of full joints $J_1 := 4$

Number of half joints $J_2 := 0$

$$M := 3\cdot(L - 1) - 2\cdot J_1 - J_2$$

$$M = 1$$

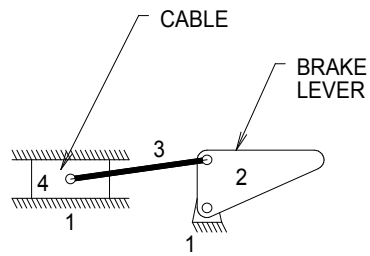

PROBLEM 2-31

Statement: Figure P2-12 shows a bicycle brake caliper assembly. Sketch a kinematic diagram of this device and draw its equivalent linkage. Determine its mobility under two conditions.

a. Brake pads not contacting the wheel rim.
b. Brake pads contacting the wheel rim.

Hint: Consider the flexible cable to be replaced by forces in this case.

Solution: See Figure P2-12 and Mathcad file P0231.

1. The rigging of the cable requires that there be two brake arms. However, kinematically they operate independently and can be analyzed that way. Therefore, we only need to look at one brake arm. When the brake pads are not contacting the wheel rim there is a single lever (link 2) that is pivoted on a full pin joint that is attached to the ground link (1). Thus, there are two links (frame and brake arm) and one full pin joint.

Number of links $L := 2$

Number of full joints $J_1 := 1$

Number of half joints $J_2 := 0$

$$M := 3\cdot(L - 1) - 2\cdot J_1 - J_2$$

$$M = 1$$

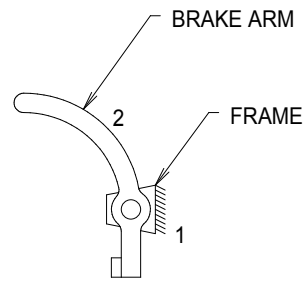

2. When the brake pad contacts the wheel rim we could consider the joint between the pad, which is rigidly attached to the brake arm and is, therefore, a part of link 2, to be a half joint. The brake arm (with pad), wheel (which is constrained from moving laterally by the frame), and the frame constitute a structure.

Number of links $L := 2$

Number of full joints $J_1 := 1$

Number of half joints $J_2 := 1$

$$M := 3\cdot(L - 1) - 2\cdot J_1 - J_2$$

$$M = 0$$

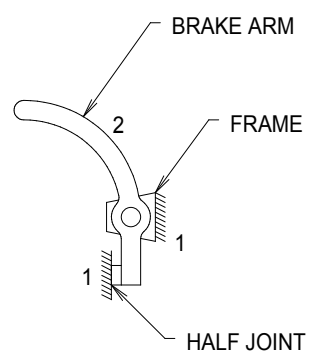

Design of Machinery 6th edition Norton Solutions Manual

PROBLEM 2-32

Statement: Find the mobility, the Grashof condition, and the Barker classifications of the mechanism in Figure P2-13.

Solution: See Figure P2-13 and Mathcad file P0232.

1. Use equation 2.1c (Kutzbach's modification) to calculate the mobility.

   When there is no cable in the jaw or before the cable is crimped this is a basic fourbar mechanism with 4 full pin joints:

   Number of links $L := 4$

   Number of full joints $J_1 := 4$

   Number of half joints $J_2 := 0$ $\quad M := 3\cdot(L-1) - 2\cdot J_1 - J_2$ $\quad M = 1$

   When there is a cable in the jaw this is a threebar mechanism with 3 full pin joints. While the cable is clamped the jaws are stationary with respect to each other so that link 4 is grounded along with link 1, leaving only three operational links.

   Number of links $L := 3$

   Number of full joints $J_1 := 3$

   Number of half joints $J_2 := 0$ $\quad M := 3\cdot(L-1) - 2\cdot J_1 - J_2$ $\quad M = 0$

2. Use inequality 2.8 to determine the Grashof condition and Table 2-4 to determine the Barker classification.

```
Condition(a,b,c,d) := | S ← min(a,b,c,d)
                      | L ← max(a,b,c,d)
                      | SL ← S + L
                      | PQ ← a + b + c + d − SL
                      | return "Grashof"  if SL < PQ
                      | return "Special Grashof"  if SL = PQ
                      | return "non-Grashof"  otherwise
```

$L_1 := 0.92$ $\quad L_2 := 0.27$

$L_3 := 0.50$ $\quad L_4 := 0.60$

$Condition(L_1, L_2, L_3, L_4) =$ "non-Grashof"

The Barker classification is II-1 (Type 5) RRR1 (non-Grashof, longest link grounded).

Design of Machinery 6th edition Norton Solutions Manual

PROBLEM 2-33

Statement: The approximate torque-speed curve and its equation for a 185 W shunt-wound DC motor are shown in Figure P2-14. The rated speed for this motor is 10000 rpm at a rated voltage of 130V. Determine:

a) The rated torque in N-mm

b) The no-load speed

c) The operating speed range

d) Plot the power-torque curve in the operating range and determine the maximum power that the motor can deliver in the that range.

Given: Rated speed, N_R $\quad N_R := 10000 \cdot rpm$ $\quad$ Rated power, H_R

$H_R := 185 \cdot W$

$$S(T) := \begin{cases} -0.098 \cdot \dfrac{N_R}{T_R} \cdot T + 1.1 \cdot N_R & \text{if } T \le 450 \cdot N \cdot mm \\ -1.501 \cdot \dfrac{N_R}{T_R} \cdot T + 4.675 \cdot N_R & \text{otherwise} \end{cases}$$

$T := 0 \cdot N \cdot mm, 10 \cdot N \cdot mm .. 550 \cdot N \cdot mm$

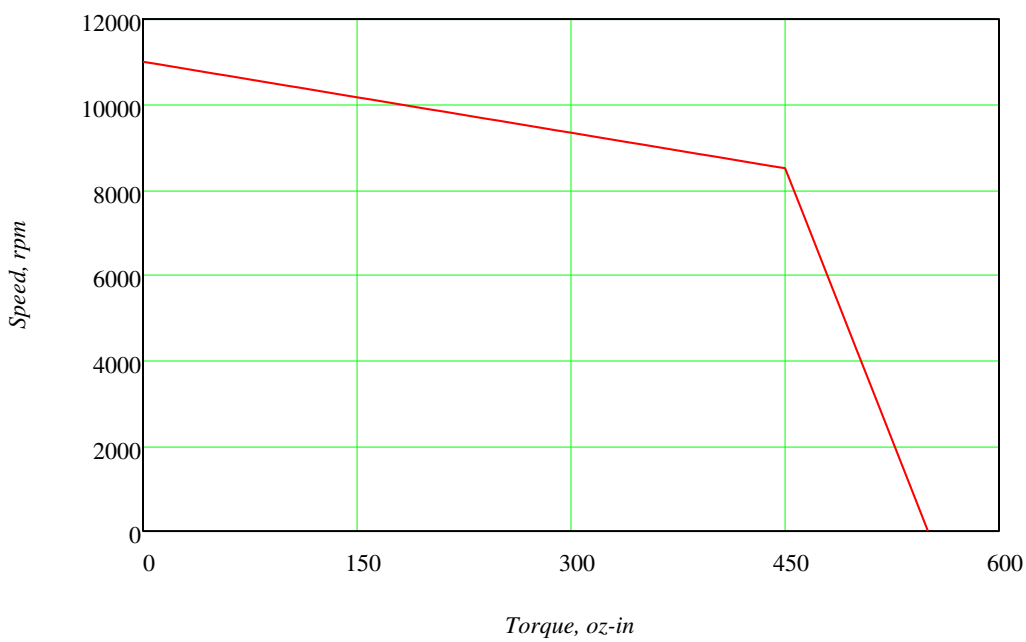

Figure P2-14 Torque-speed Characteristic of a 185 W, 10000 rpm DC Motor

Solution: See Figure P2-3 and Mathcad file P0220.

Design of Machinery 6th edition Norton Solutions Manual

a. The rated torque is found by dividing the rated power by the rated speed:

Rated torque, T_R $\quad T_R := \dfrac{H_R}{N_R} \quad T_R = 177 \cdot N \cdot mm$

b. The no-load speed occurs at $T = 0$. From the graph this is 11000 rpm.

c. The operating speed range for a shunt-wound DC motor is the speed at which the motor begins to stall up to the no-load speed. For the approximate torque-speed curve given in this problem the minimum speed is defined as the speed at the knee of the curve.

$Nop_{min} := S(450 \cdot N \cdot mm) \qquad Nop_{min} = 8504 \cdot rpm$

$Nop_{max} := S(0 \cdot N \cdot mm) \qquad Nop_{max} = 11000 \cdot rpm$

d. The power is the product of the speed and the torque. From the graph the equation for the torque-speed curve over the operating range is:

$$S(T) := -\frac{2500 \cdot rpm}{450 \cdot N \cdot mm} \cdot T + 11000 \cdot rpm$$

and the power, therefore, is:

$$H(T) := S(T) \cdot T$$

Plotting the power as a function of torque over the range $T := 0 \cdot N \cdot mm, 10 \cdot N \cdot mm .. 450 \cdot N \cdot mm$

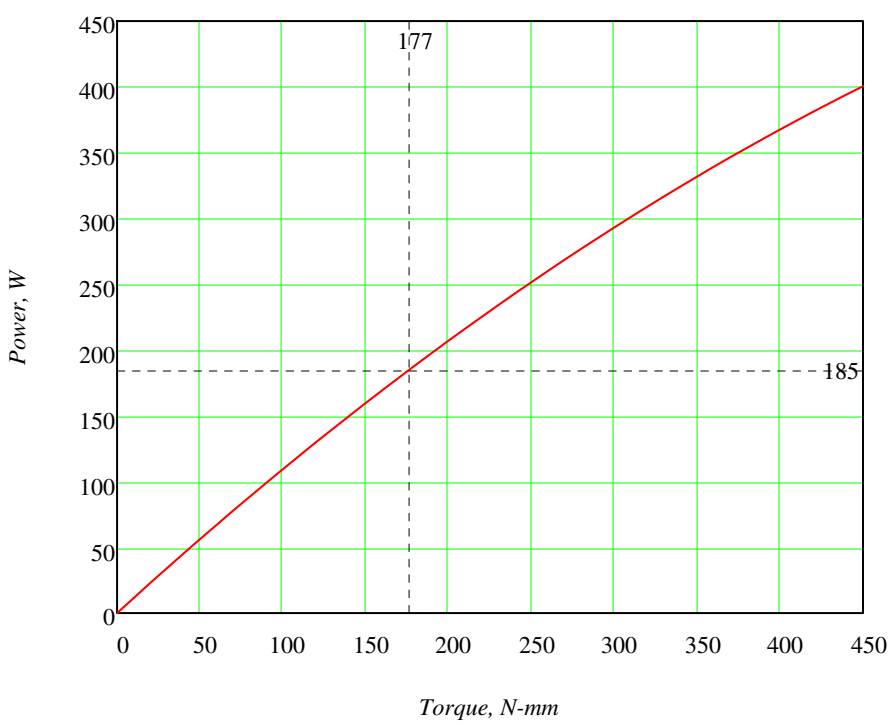

Maximum power occurs at the maximum torque in the operating range. The value of T at maximum power is:

Design of Machinery 6th edition Norton Solutions Manual

Value of T at H_{max}	$T_{Hmax} := 450 \cdot N \cdot mm$	$T_{Hmax} = 450 \cdot N \cdot mm$
Maximum power	$H_{max} := H\left(T_{Hmax}\right)$	$H_{max} = 401 \cdot W$
Speed at max power	$N_{Hmax} := S\left(T_{Hmax}\right)$	$N_{Hmax} = 8500 \cdot rpm$

Note that the curve goes through the rated power point of 185W at the rated torque of 177 N-mm.

Design of Machinery 6th edition Norton Solutions Manual

PROBLEM 2-34

Statement: Figure P2-15 shows a power hacksaw, used to cut metal. Link 5 pivots at O5 and its weight forces the sawblade against the workpiece while the linkage moves the blade (link 4) back and forth within link 5 to cut the part. Sketch its kinematic diagram, determine its mobility and its type (i.e., is it a fourbar, a Watt's sixbar, a Stephenson's sixbar, an eightbar, or what?) Use reverse linkage transformation to determine its pure revolute-jointed equivalent linkage.

Solution: See Figure P2-15 and Mathcad file P0234.

1. Sketch a kinematic diagram of the mechanism. The mechanism is shown on the left and a kinematic model of it is sketched on the right. It is a fivebar linkage with 1 *DOF* (see below).

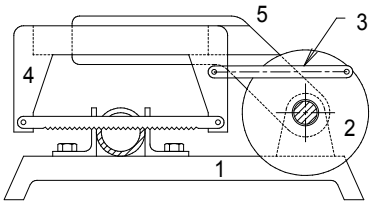

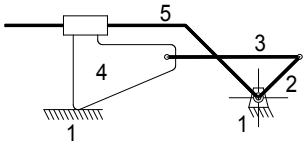

2. Use equation 2.1c to determine the *DOF* (mobility). There are 5 links, 4 full pin joints, 1 full sliding joint, and 1 half joint (at the interface between the hacksaw blade and the pipe being cut).

Kutzbach's mobility equation (2.1c)

Number of links $L := 5$

Number of full joints $J_1 := 5$

Number of half joints $J_2 := 1$

$$M := 3\cdot(L - 1) - 2\cdot J_1 - J_2 \qquad M = 1$$

3. Use rule 1 to transform the full sliding joint to a full pin joint for no change in *DOF*. Then use rules 2 and 3 by changing the half joint to a full pin joint and adding a link for no change in *DOF*. The resulting kinematically equivalent linkage has 6 links, 7 full pin joints, no half joints, and is shown below.

Kutzbach's mobility equation (2.1c)

Number of links $L := 6$

Number of full joints $J_1 := 7$

Number of half joints $J_2 := 0$

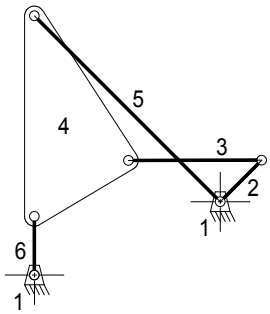

$$M := 3\cdot(L - 1) - 2\cdot J_1 - J_2$$

$$M = 1$$

Design of Machinery 6th edition Norton Solutions Manual

PROBLEM 2-35

Statement: Figure P2-16 shows a manual press used to compact powdered materials. Sketch its kinematic diagram, determine its mobility and its type (i.e., is it a fourbar, a Watt's sixbar, a Stephenson's sixbar, an eightbar, or what?) Use reverse linkage transformation to determine its pure revolute-jointed equivalent linkage.

Solution: See Figure P2-16 and Mathcad file P0235.

1. Sketch a kinematic diagram of the mechanism. The mechanism is shown on the left and a kinematic model of it is sketched on the right. It is a fourbar linkage with 1 *DOF* (see below).

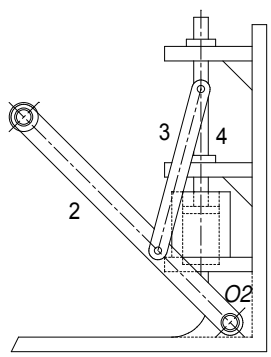

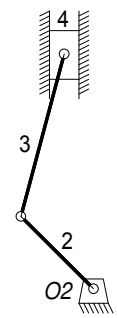

2. Use equation 2.1c to determine the *DOF* (mobility). There are 4 links, 3 full pin joints, 1 full sliding joint, and 0 half joints. This is a fourbar slider-crank.

Kutzbach's mobility equation (2.1c)

Number of links $L := 4$

Number of full joints $J_1 := 4$

Number of half joints $J_2 := 0$

$$M := 3\cdot(L - 1) - 2\cdot J_1 - J_2 \qquad M = 1$$

3. Use rule 1 to transform the full sliding joint to a full pin joint for no change in *DOF*. The resulting kinematically equivalent linkage has 4 links, 4 full pin joints, no half joints, and is shown below.

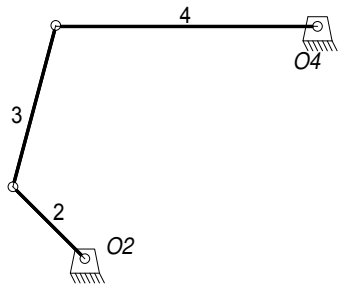

Design of Machinery 6th edition Norton Solutions Manual

PROBLEM 2-36

Statement: Sketch the equivalent linkage for the cam and follower mechanism in Figure P2-17 in the position shown. Show that it has the same *DOF* as the original mechanism.

Solution: See Figure P2-17 and Mathcad file P0236.

1. The cam follower mechanism is shown on the left and a kinematically equivalent model of it is sketched on the right.

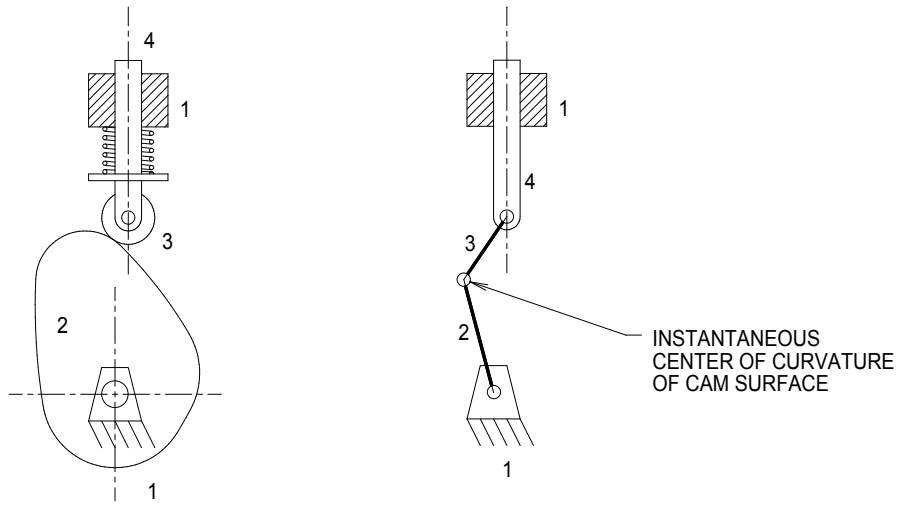

2. Use equation 2.1c to determine the *DOF* (mobility) of the original mechanism. There are 4 links, 2 full pin joints, 1 full sliding joint, 1 pure rolling joint and 0 half joints.

Kutzbach's mobility equation (2.1c)

Number of links $L := 4$

Number of full joints $J_1 := 4$

Number of half joints $J_2 := 0$

$$M := 3\cdot(L - 1) - 2\cdot J_1 - J_2 \qquad M = 1$$

3. Use equation 2.1c to determine the *DOF* (mobility) of the equivalent mechanism. There are 4 links, 3 full pin joints, 1 full sliding joint, and 0 half joints. This is a fourbar slider-crank.

Kutzbach's mobility equation (2.1c)

Number of links $L := 4$

Number of full joints $J_1 := 4$

Number of half joints $J_2 := 0$

$$M := 3\cdot(L - 1) - 2\cdot J_1 - J_2 \qquad M = 1$$

Design of Machinery 6th edition Norton Solutions Manual

PROBLEM 2-37

Statement: Describe the motion of the following rides, commonly found at an amusement park, as pure rotation, pure translation, or complex planar motion.

a. A Ferris wheel
b. A "bumper" car
c. A drag racer ride
d. A roller coaster whose foundation is laid out in a straight line
e. A boat ride through a maze
f. A pendulum ride
g. A train ride

Solution: See Mathcad file P0211.

a. A Ferris wheel
Pure rotation.

b. A "bumper car"
Complex planar motion.

c. A drag racer ride
Pure translation.

d. A roller coaster whose foundation is laid out in a straight line
Complex planar motion.

e. A boat ride through a maze
Complex planar motion.

f. A pendulum ride
Pure rotation.

g. A train ride
Complex planar motion.

Design of Machinery 6th edition Norton Solutions Manual

PROBLEM 2-38

Statement: Figure P2-1a is an example of a mechanism. Number the links, starting with 1. (Hint: Don't forget the "ground" link.) Letter the joints alphabetically, starting with *A*.

a. Using the link numbers, describe each link as binary, ternary, etc.

b. Using the joint letters, determine each joint's order.

c. Using the joint letters, determine whether each is a half or full joint.

Solution: See Figure P2-1a and Mathcad file P0238.

1. Label the link numbers and joint letters for Figure P2-1a.

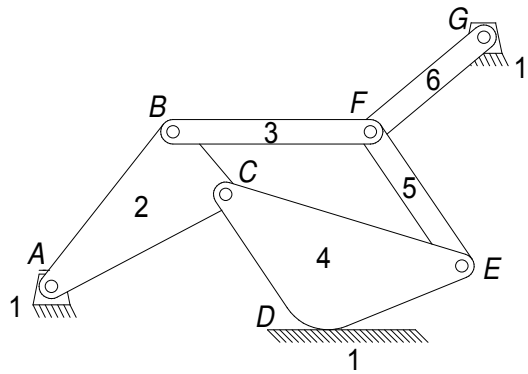

a. Using the link numbers, describe each link as binary, ternary, etc.

Link No.	Link Order
1	Ternary
2	Ternary
3	Binary
4	Ternary
5	Binary
6	Binary

b,c. Using the joint letters, determine each joint's order and whether each is a half or full joint.

Joint Letter	Joint Order	Half/Full
A	1	Full
B	1	Full
C	1	Full
D	1	Half
E	1	Full
F	2	Full
G	1	Full

Design of Machinery 6th edition Norton Solutions Manual

PROBLEM 2-39

Statement: Figure P2-1b is an example of a mechanism. Number the links, starting with 1. (Hint: Don't forget the "ground" link.) Letter the joints alphabetically, starting with *A*.

a. Using the link numbers, describe each link as binary, ternary, etc.

b. Using the joint letters, determine each joint's order.

c. Using the joint letters, determine whether each is a half or full joint.

Solution: See Figure P2-1b and Mathcad file P0239.

1. Label the link numbers and joint letters for Figure P2-1b.

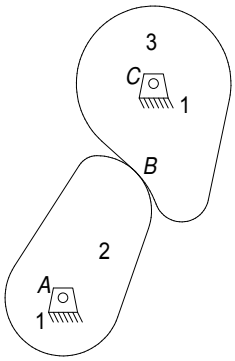

a. Using the link numbers, describe each link as binary, ternary, etc.

Link No.	Link Order
1	Binary
2	Binary
3	Binary

b,c. Using the joint letters, determine each joint's order and whether each is a half or full joint.

Joint Letter	Joint Order	Half/Full
A	1	Full
B	1	Half
C	1	Full

Design of Machinery 6th edition Norton Solutions Manual

PROBLEM 2-40

Statement: Figure P2-1c is an example of a mechanism. Number the links, starting with 1. (Hint: Don't forget the "ground" link.) Letter the joints alphabetically, starting with *A*.

a. Using the link numbers, describe each link as binary, ternary, etc.

b. Using the joint letters, determine each joint's order.

c. Using the joint letters, determine whether each is a half or full joint.

Solution: See Figure P2-1c and Mathcad file P0240.

1. Label the link numbers and joint letters for Figure P2-1c.

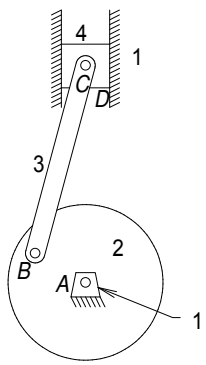

a. Using the link numbers, describe each link as binary, ternary, etc.

Link No.	Link Order
1	Binary
2	Binary
3	Binary
4	Binary

b,c. Using the joint letters, determine each joint's order and whether each is a half or full joint.

Joint Letter	Joint Order	Half/Full
A	1	Full
B	1	Full
C	1	Full
D	1	Full

Design of Machinery 6th edition Norton Solutions Manual

PROBLEM 2-41

Statement: Figure P2-1d is an example of a mechanism. Number the links, starting with 1. (Hint: Don't forget the "ground" link.) Letter the joints alphabetically, starting with *A*.

a. Using the link numbers, describe each link as binary, ternary, etc.

b. Using the joint letters, determine each joint's order.

c. Using the joint letters, determine whether each is a half or full joint.

Solution: See Figure P2-1d and Mathcad file P0241.

1. Label the link numbers and joint letters for Figure P2-1d.

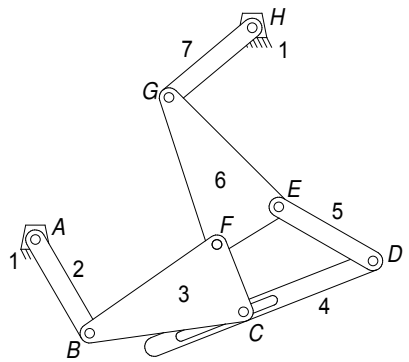

a. Using the link numbers, describe each link as binary, ternary, etc.

Link No.	Link Order
1	Binary
2	Binary
3	Ternary
4	Binary
5	Binary
6	Ternary
7	Binary

b,c. Using the joint letters, determine each joint's order and whether each is a half or full joint.

Joint Letter	Joint Order	Half/Full
A	1	Full
B	1	Full
C	1	Half
D	1	Full
E	1	Full
F	1	Full
G	1	Full
H	1	Full

Design of Machinery 6th edition Norton Solutions Manual

PROBLEM 2-42

Statement: Find the mobility, Grashof condition and Barker classification of the oil field pump shown in Figure P2-18.

Solution: See Figure P2-18 and Mathcad file P0242.

1. Use inequality 2.8 to determine the Grashof condition and Table 2-4 to determine the Barker classification.

$$Condition(a,b,c,d) := \left| \begin{array}{l} S \leftarrow min(a,b,c,d) \\ L \leftarrow max(a,b,c,d) \\ SL \leftarrow S + L \\ PQ \leftarrow a + b + c + d - SL \\ return \ \text{"Grashof"} \ \ if \ SL < PQ \\ return \ \text{"Special Grashof"} \ \ if \ SL = PQ \\ return \ \text{"non-Grashof"} \ \ otherwise \end{array} \right.$$

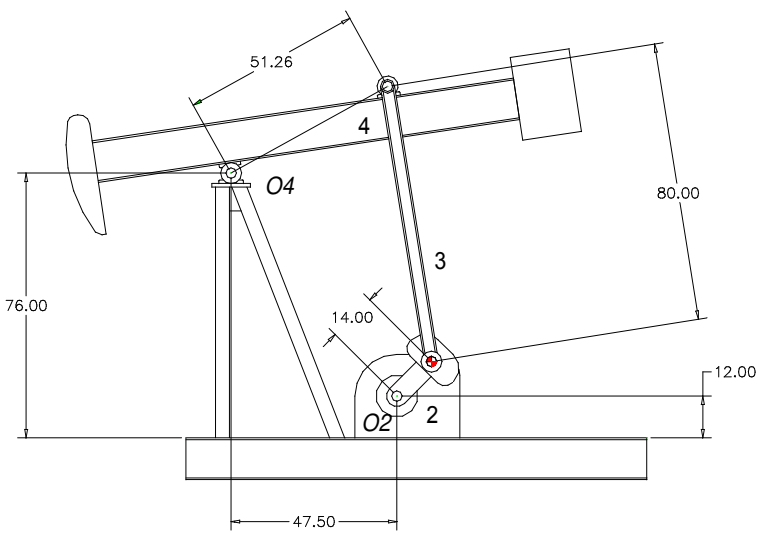

This is a basic fourbar linkage. The input is the 14-in-long crank (link 2) and the output is the top beam (link 4). The mobility (*DOF*) is found using equation 2.1c (Kutzbach's modification):

Number of links $L := 4$

Number of full joints $J_1 := 4$

Number of half joints $J_2 := 0$ $\quad M := 3\cdot(L - 1) - 2\cdot J_1 - J_2 \quad M = 1$

The link lengths and Grashof condition are

$$L_1 := \sqrt{(76 - 12)^2 + 47.5^2} \qquad L_1 = 79.701 \qquad L_2 := 14 \qquad L_3 := 80 \qquad L_4 := 51.26$$

$$Condition(L_1, L_2, L_3, L_4) = \text{"Grashof"}$$

This is a Barker Type 2 GCRR (Grashof, shortest link is input).

Design of Machinery 6th edition Norton Solutions Manual

PROBLEM 2-43

Statement: Find the mobility, Grashof condition and Barker classification of the aircraft overhead bin shown in Figure P2-19.

Solution: See Figure P2-19 and Mathcad file P0243.

1. Use inequality 2.8 to determine the Grashof condition and Table 2-4 to determine the Barker classification.

$$Condition(a,b,c,d) := \left| \begin{array}{l} S \leftarrow min(a,b,c,d) \\ L \leftarrow max(a,b,c,d) \\ SL \leftarrow S + L \\ PQ \leftarrow a + b + c + d - SL \\ return\ \text{"Grashof"}\ \ if\ \ SL < PQ \\ return\ \text{"Special Grashof"}\ \ if\ \ SL = PQ \\ return\ \text{"non-Grashof"}\ \ otherwise \end{array} \right.$$

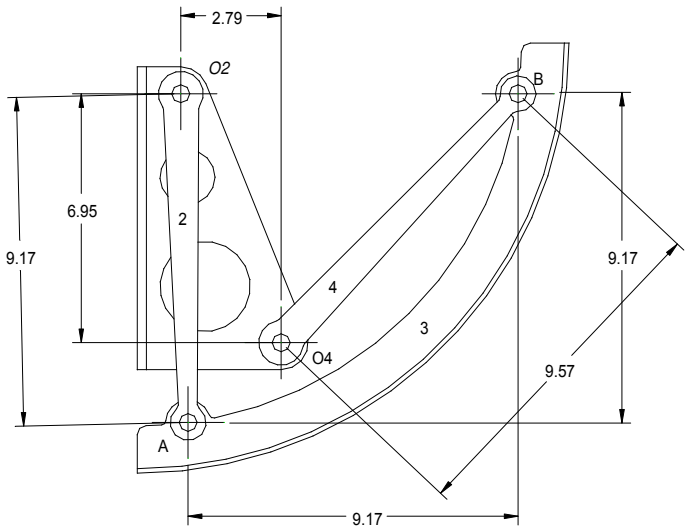

This is a basic fourbar linkage. The input is the link 2 and the output is link 4. The mobility (*DOF*) is found using equation 2.1c (Kutzbach's modification):

Number of links $L := 4$

Number of full joints $J_1 := 4$

Number of half joints $J_2 := 0$ $\quad M := 3\cdot(L-1) - 2\cdot J_1 - J_2 \quad M = 1$

The link lengths and Grashof condition are

$$L_1 := \sqrt{2.79^2 + 6.95^2} \qquad L_1 = 7.489 \qquad L_2 := 9.17$$

$$L_3 := \sqrt{9.17^2 + 9.17^2} \qquad L_3 = 12.968 \qquad L_4 := 9.57$$

$$Condition(L_1, L_2, L_3, L_4) = \text{"non-Grashof"}$$

This is a Barker Type 7 RRR3 (non-Grashof, longest link is coupler).

Design of Machinery 6th edition Norton Solutions Manual

PROBLEM 2-44

Statement: Figure P2-20 shows a "Rube Goldberg" mechanism that turns a light switch on when a room door is opened and off when the door is closed. The pivot at O_2 goes through the wall. There are two spring-loaded piston-in cylinder devices in the assembly. An arrangement of ropes and pulleys inside the room transfers the door swing into a rotation of link 2. Door opening rotates link 2 CW, pushing the switch up as shown in the figure, and door closing rotates link 2 CCW, pulling the switch down. Find the mobility of the linkage.

Solution: See Figure P2-20 and Mathcad file P0244.

1. Examination of the figure shows 20 links (including the switch) and 28 full joints. The second piston-in cylinder that actuates the switch is counted as a single binary link of variable length with joints at its ends. The other cylinder consists of two binary links, each link having one pin joint and one slider joint. There are no half joints.
2. Use equation 2.1c to determine the *DOF* (mobility).

Kutzbach's mobility equation (2.1c)

Number of links $L := 20$

Number of full joints $J_1 := 28$

Number of half joints $J_2 := 0$

$$M := 3\cdot(L - 1) - 2\cdot J_1 - J_2 \qquad M = 1$$

3. An alternative is to ignore the first piston-in cylinder that acts on the third bellcrank from O_2 since it does not affect the motion of the linkage (it acts only as a damper.) In that case, subtract two links and three full joints, giving $L = 18$, $J_1 = 25$ and $M = 1$.

Design of Machinery 6th edition Norton Solutions Manual

PROBLEM 2-45

Statement: All of the eightbar linkages in Figure 2-11 part 2 have eight possible inversions. Some of these will give motions similar to others. Those that have distinct motions are called *distinct inversions*. How many distinct inversions does the linkage in row 4, column 1 have?

Solution: See Figure 2-11, part 2 and Mathcad file P0245.

1. This isomer has one quaternary, two ternary, and five binary links arranged in a symmetrical fashion. Due to this symmetry, grounding link 2 or 7 gives the same inversion, as do grounding 3 or 6 and 4 or 5. This makes 3 of the possible 8 inversions the same leaving 5 distinct inversions. Distinct inversions are obtained by grounding link 1, 2, 3, 4, or 8 (or 1, 5, 6, 7, or 8) for a total of 5 distinct inversions.

Design of Machinery 6th edition Norton Solutions Manual

PROBLEM 2-46

Statement: All of the eightbar linkages in Figure 2-11 part 2 have eight possible inversions. Some of these will give motions similar to others. Those that have distinct motions are called *distinct inversions*. How many distinct inversions does the linkage in row 4, column 2 have?

Solution: See Figure 2-11, part 2 and Mathcad file P0246.

1. This isomer has four ternary, and four binary links arranged in a symmetrical fashion. Due to this symmetry, grounding link 1 or 5 gives the same inversion, as do grounding 2 or 8, 4 or 6, and 3 or 7. This makes 4 of the possible 8 inversions the same leaving 4 distinct inversions. Distinct inversions are obtained by grounding link 1, 2, 3, or 4 (or 5, 6, 7, or 8) for a total of 4 distinct inversions.

Design of Machinery 6th edition Norton Solutions Manual

PROBLEM 2-47

Statement: All of the eightbar linkages in Figure 2-11 part 2 have eight possible inversions. Some of these will give motions similar to others. Those that have distinct motions are called *distinct inversions*. How many distinct inversions does the linkage in row 4, column 3 have?

Solution: See Figure 2-11, part 2 and Mathcad file P0247.

1. This isomer has four ternary, and four binary links arranged in a symmetrical fashion. Due to this symmetry, grounding link 2 or 4 gives the same inversion, as does grounding 5 or 7. This makes 2 of the possible 8 inversions the same leaving 6 distinct inversions. Distinct inversions are obtained by grounding link 1, 2, 3, 5, 6 or 8 (or 1, 3, 4, 6, 7, or 8) for a total of 6 distinct inversions.

Design of Machinery 6th edition Norton Solutions Manual

PROBLEM 2-48

Statement: Find the mobility of the mechanism shown in Figure 3-33.

Solution: See Figure 3-33 and Mathcad file P0248.

1. Use equation 2.1c to determine the *DOF* (mobility). There are 6 links, 7 full pin joints (two at *B*), and no half-joints.

Kutzbach's mobility equation (2.1c)

Number of links $L := 6$

Number of full joints $J_1 := 7$

Number of half joints $J_2 := 0$

$$M := 3\cdot(L - 1) - 2\cdot J_1 - J_2 \qquad M = 1$$

Design of Machinery 6th edition Norton Solutions Manual

PROBLEM 2-49

Statement: Find the mobility of the mechanism shown in Figure 3-34.

Solution: See Figure 3-34 and Mathcad file P0249.

1. Use equation 2.1c to determine the *DOF* (mobility). There are 6 links, 7 full pin joints, and no half-joints.

Kutzbach's mobility equation (2.1c)

Number of links $L := 6$

Number of full joints $J_1 := 7$

Number of half joints $J_2 := 0$

$$M := 3\cdot(L - 1) - 2\cdot J_1 - J_2 \qquad M = 1$$

Design of Machinery 6th edition Norton Solutions Manual

PROBLEM 2-50

Statement: Find the mobility of the mechanism shown in Figure 3-35.

Solution: See Figure 3-35 and Mathcad file P0250.

1. Use equation 2.1c to determine the *DOF* (mobility). There are 6 links, 7 full pin joints, and no half-joints.

Kutzbach's mobility equation (2.1c)

Number of links $L := 6$

Number of full joints $J_1 := 7$

Number of half joints $J_2 := 0$

$$M := 3\cdot(L - 1) - 2\cdot J_1 - J_2 \qquad M = 1$$

Design of Machinery 6th edition Norton Solutions Manual

PROBLEM 2-51

Statement: Find the mobility of the mechanism shown in Figure 3-36.

Solution: See Figure 3-36 and Mathcad file P0251.

1. Use equation 2.1c to determine the *DOF* (mobility). There are 8 links, 10 full pin joints (two at O_4), and no half-joints.

Kutzbach's mobility equation (2.1c)

Number of links $L := 8$

Number of full joints $J_1 := 10$

Number of half joints $J_2 := 0$

$$M := 3\cdot(L - 1) - 2\cdot J_1 - J_2 \qquad M = 1$$

Design of Machinery 6th edition Norton Solutions Manual

PROBLEM 2-52

Statement: Find the mobility of the mechanism shown in Figure 3-37.

Solution: See Figure 3-37 and Mathcad file P0252.

1. Use equation 2.1c to determine the *DOF* (mobility). There are 6 links, 7 full pin joints (two at O_4), and no half-joints.

Kutzbach's mobility equation (2.1c)

Number of links $L := 6$

Number of full joints $J_1 := 7$

Number of half joints $J_2 := 0$

$$M := 3\cdot(L - 1) - 2\cdot J_1 - J_2 \qquad M = 1$$

Design of Machinery 6th edition Norton Solutions Manual

PROBLEM 2-53

Statement: Figure P2-1e is an example of a mechanism. Number the links, starting with 1. (Hint: Don't forget the "ground" link.) Letter the joints alphabetically, starting with *A*.

a. Using the link numbers, describe each link as binary, ternary, etc.

b. Using the joint letters, determine each joint's order.

c. Using the joint letters, determine whether each is a half or full joint.

Solution: See Figure P2-1e and Mathcad file P0253.

1. Label the link numbers and joint letters for Figure P2-1e.

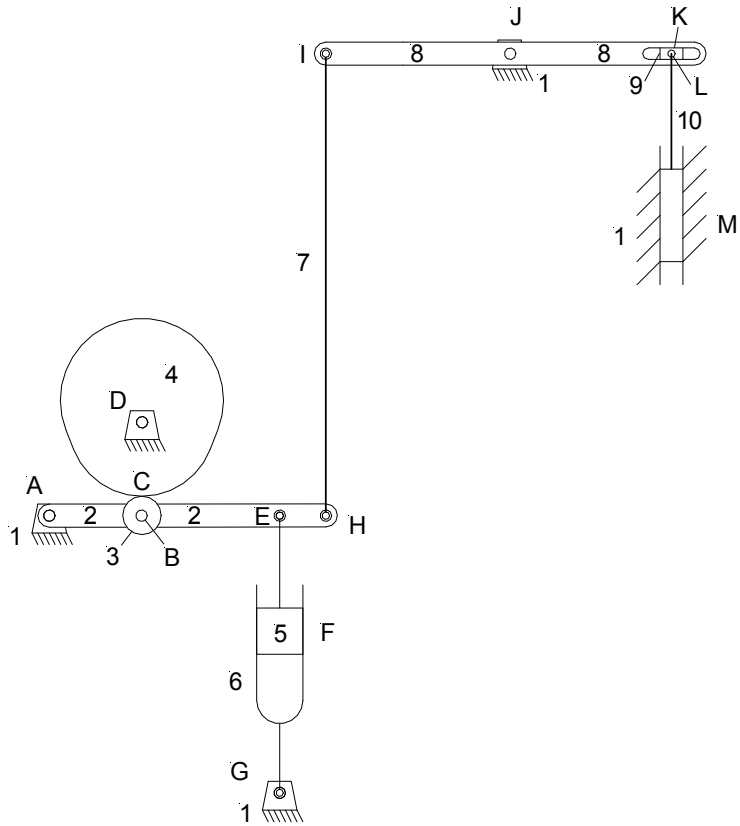

a. Using the link numbers, describe each link as binary, ternary, etc.

Link No.	Link Order	Link No.	Link Order
1	5 nodes	7	Binary
2	Quaternary	8	Ternary
3	Binary	9	Binary
4	Binary	10	Binary
5	Binary		
6	Binary		

Design of Machinery 6th edition Norton Solutions Manual

b,c. Using the joint letters, determine each joint's order and whether each is a half or full joint.

Joint Letter	Joint Order	Half/Full	Joint Classification
A	1	Full	Grounded rotating joint
B	1	Full	Moving rotating joint
C	1	Full	Pure rolling joint
D	1	Full	Grounded rotating joint
E	1	Full	Moving rotating joint
F	1	Full	Moving translating joint
G	1	Full	Grounded rotating joint
H	1	Full	Moving rotating joint
I	1	Full	Moving rotating joint
J	1	Full	Grounded rotating joint
K	1	Full	Moving translating joint
L	1	Full	Moving rotating joint
M	1	Full	Grounded translating joint

Design of Machinery 6th edition Norton Solutions Manual

PROBLEM 2-54

Statement: Figure P2-1f is an example of a mechanism. Number the links, starting with 1. (Hint: Don't forget the "ground" link.) Letter the joints alphabetically, starting with *A*.

a. Using the link numbers, describe each link as binary, ternary, etc.

b. Using the joint letters, determine each joint's order.

c. Using the joint letters, determine whether each is a half or full joint.

Solution: See Figure P2-1f and Mathcad file P0254.

1. Label the link numbers and joint letters for Figure P2-1f.

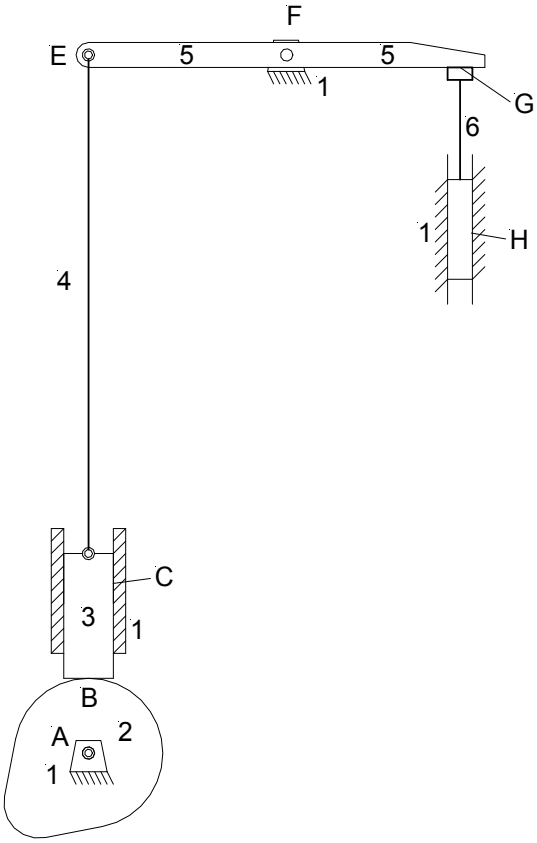

a. Using the link numbers, describe each link as binary, ternary, etc.

Link No.	Link Order
1	Quaternary
2	Binary
3	Ternary
4	Binary
5	Ternary
6	Binary

Design of Machinery 6th edition Norton Solutions Manual

b,c. Using the joint letters, determine each joint's order and whether each is a half or full joint.

Joint Letter	Joint Order	Half/Full	Joint Classification
A	1	Full	Grounded rotating joint
B	1	Full	Moving half joint
C	1	Full	Grounded translating joint
D	1	Full	Moving rotating joint
E	1	Full	Moving rotating joint
F	1	Full	Grounded rotating joint
G	1	Full	Moving half joint
H	1	Full	Grounded translating joint

Design of Machinery 6th edition Norton Solutions Manual

PROBLEM 2-55

Statement: Figure P2-1g is an example of a mechanism. Number the links, starting with 1. (Hint: Don't forget the "ground" link.) Letter the joints alphabetically, starting with *A*.

a. Using the link numbers, describe each link as binary, ternary, etc.

b. Using the joint letters, determine each joint's order.

c. Using the joint letters, determine whether each is a half or full joint.

Solution: See Figure P2-1g and Mathcad file P0255.

1. Label the link numbers and joint letters for Figure P2-1g.

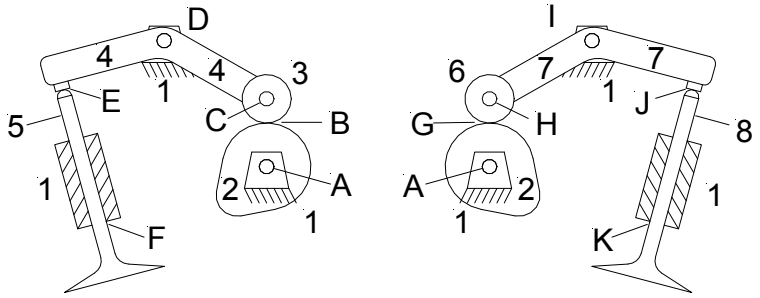

a. Using the link numbers, describe each link as binary, ternary, etc.

Link No.	Link Order	Link No.	Link Order
1	5 nodes	5	Binary
2	Binary	6	Binary
3	Binary	7	Ternary
4	Ternary	8	Binary

b,c. Using the joint letters, determine each joint's order and whether each is a half or full joint.

Joint Letter	Joint Order	Half/Full	Joint Classification
A	1	Full	Grounded rotating joint
B	1	Full	Moving rolling joint
C	1	Full	Moving rotating joint
D	1	Full	Grounded rotating joint
E	1	Half	Moving sliding joint
F	1	Full	Grounded translating joint
G	1	Full	Moving rolling joint
H	1	Full	Moving rotating joint
I	1	Full	Grounded rotating joint
J	1	Half	Moving sliding joint
K	1	Full	Grounded translating joint

Design of Machinery 6th edition Norton Solutions Manual

PROBLEM 2-56

Statement: For the example linkage shown in Figure 2-4 find the number of links and their respective link orders, the number of joints and their respective orders, and the mobility of the linkage.

Solution: See Figure 2-4 and Mathcad file P0256.

1. Label the link numbers and joint letters for Figure 2-4 example.

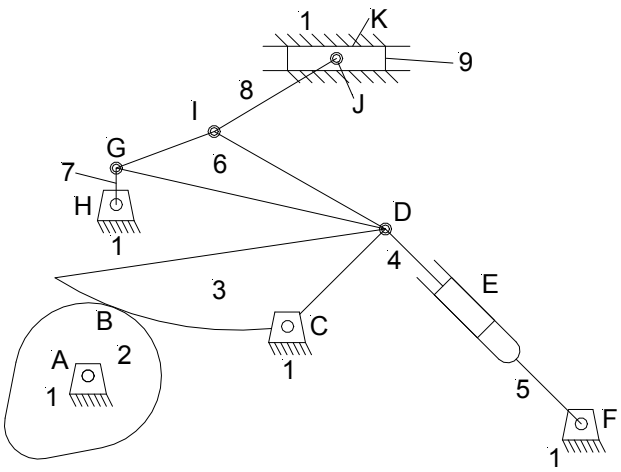

2. Using the link numbers, describe each link as binary, ternary, etc.

Link No.	Link Order	Link No.	Link Order
1	5 nodes	6	Ternary
2	Binary	7	Binary
3	Ternary	8	Binary
4	Binary	9	Binary
5	Binary		

3. Using the joint letters, determine each joint's order and whether each is a half or full joint.

Joint Letter	Joint Order	Half/Full	Joint Classification
A	1	Full	Grounded rotating joint
B	1	Half	Moving sliding joint
C	1	Full	Grounded rotating joint
D	2	Full	Moving rotating joint
E	1	Full	Moving translating joint
F	1	Full	Grounded rotating joint
G	1	Full	Moving rotating joint
H	1	Full	Grounded rotating joint
I	1	Full	Moving rotating joint
J	1	Full	Moving rotating joint
K	1	Full	Grounded translating joint

Design of Machinery 6th edition Norton Solutions Manual

4. Use equation 2.1c to calculate the *DOF* (mobility).

Kutzbach's mobility equation (2.1c)

Number of links $L := 9$ Number of full joints $J_1 := 11$ Number of half joints $J_2 := 1$

$M := 3 \cdot (L - 1) - 2 \cdot J_1 - J_2$ $M = 1$

Design of Machinery 6th edition Norton Solutions Manual

PROBLEM 2-57

Statement: For the linkage shown in Figure 2-5b find the number of joints and their respective orders, and mobility for:

a) The condition of a finite load *W* in the direction shown and a zero *F*

b) The condition of a finite load *W* and a finite load *F* both in the directions shown after link 6 is off the stop.

Solution: See Figure 2-5b and Mathcad file P0257.

1. Label the link numbers and joint letters for Figure 2-5b.

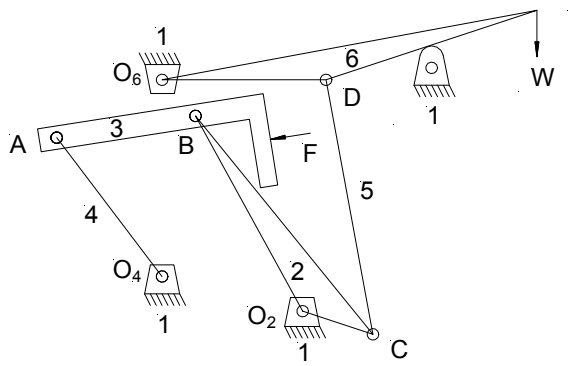

a) The condition of a finite load *W* in the direction shown and a zero *F:* Using the joint letters, determine each joint's order and whether each is a half or full joint. Link 6 is grounded so joint D is a grounded rotating joint and O_6 is not a joint. For this condition there is a total of 6 full joints and no half joints.

Joint Letter	Joint Order	Half/Full	Joint Classification
O_2	1	Full	Grounded rotating joint
B	1	Full	Moving rotating joint
C	1	Full	Moving rotating joint
D	1	Full	Grounded rotating joint
O_4	1	Full	Grounded rotating joint
A	1	Full	Moving rotating joint

Use equation 2.1c to calculate the *DOF* (mobility).

Kutzbach's mobility equation (2.1c)

Number of links $L := 5$ Number of full joints $J_1 := 6$ Number of half joints $J_2 := 0$

$M := 3\cdot(L - 1) - 2\cdot J_1 - J_2$ $M = 0$

b) The condition of a finite load *W* and a finite load *F* both in the directions shown after link 6 is off the stop. Using the joint letters, determine each joint's order and whether each is a half or full joint.

Joint Letter	Joint Order	Half/Full	Joint Classification
A	1	Full	Moving rotating joint
B	1	Full	Moving rotating joint
C	1	Full	Moving rotating joint
D	1	Full	Moving rotating joint

Design of Machinery 6th edition Norton Solutions Manual

O_2	1	Full	Grounded rotating joint
O_4	1	Full	Grounded rotating joint
O_6	1	Full	Grounded rotating joint

Use equation 2.1c to calculate the *DOF* (mobility).

Kutzbach's mobility equation (2.1c)

Number of links $L := 6$ Number of full joints $J_1 := 7$ Number of half joints $J_2 := 0$

$M := 3 \cdot (L - 1) - 2 \cdot J_1 - J_2$ $M = 1$

Design of Machinery 6th edition Norton Solutions Manual

PROBLEM 2-58

Statement: Figure P2-21a shows a "Nuremberg scissors" mechanism. Find its mobility.

Solution: See Figure P2-21a and Mathcad file P0258.

1. Use equation 2.1c to calculate the *DOF* (mobility).

Kutzbach's mobility equation (2.1c)

Number of links $L := 10$

Number of full joints $J_1 := 13$

Number of half joints $J_2 := 0$

$$M := 3\cdot(L - 1) - 2\cdot J_1 - J_2 \qquad M = 1$$

Design of Machinery 6th edition Norton Solutions Manual

PROBLEM 2-59

Statement: Figure P2-21b shows a mechanism. Find its mobility and classify its isomer type.

Solution: See Figure P2-21b and Mathcad file P0259.

1. Use equation 2.1c to calculate the *DOF* (mobility).

   Kutzbach's mobility equation (2.1c)

   Number of links $L := 6$

   Number of full joints $J_1 := 7$

   Number of half joints $J_2 := 0$

   $$M := 3\cdot(L - 1) - 2\cdot J_1 - J_2 \qquad M = 1$$

2. Using Figure 2-9, we see that the mechanism is a **Stephenson's sixbar isomer** (the two ternary links are connected with two binary links and one dyad).

Design of Machinery 6th edition Norton Solutions Manual

PROBLEM 2-60

Statement: Figure P2-21c shows a circular saw mounted on the coupler of a fourbar linkage. The centerline of the saw blade is at a coupler point that moves in an approximate straight line. Draw its kinematic diagram and determine its mobility.

Solution: See Figure P2-21c and Mathcad file P0260.

1. Draw a kinematic diagram of the mechanism. The saw's rotation axis is at point P and the saw is attached to link 3.

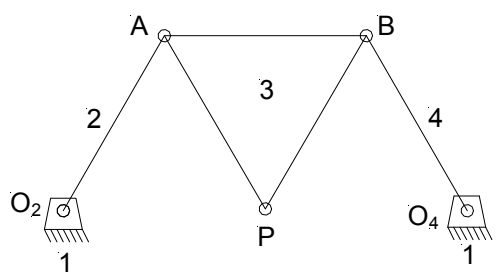

2. Use equation 2.1c to calculate the *DOF* (mobility).

Kutzbach's mobility equation (2.1c)

Number of links $L := 4$

Number of full joints $J_1 := 4$

Number of half joints $J_2 := 0$

$$M := 3\cdot(L - 1) - 2\cdot J_1 - J_2 \qquad M = 1$$

Design of Machinery 6th edition Norton Solutions Manual

PROBLEM 2-61

Statement: Figure P2-21d shows a log transporter. Draw a kinematic diagram of the mechanism, specify the number of links and joints, and then determine its mobility:

a) For the transporter wheels locked and no log in the "claw" of the mechanism

b) For the transporter wheels locked with it lifting a log

c) For the transporter moving a log to a destination in a straight line.

Solution: See Figure P2-21d and Mathcad file P0261.

1. Draw a kinematic diagram of the mechanism. Link 1 is the frame of the transporter. Joint B is of order 3. Actuators E and F provide two inputs (to get x-y motion) and actuator H provides an additional input for clamping logs.

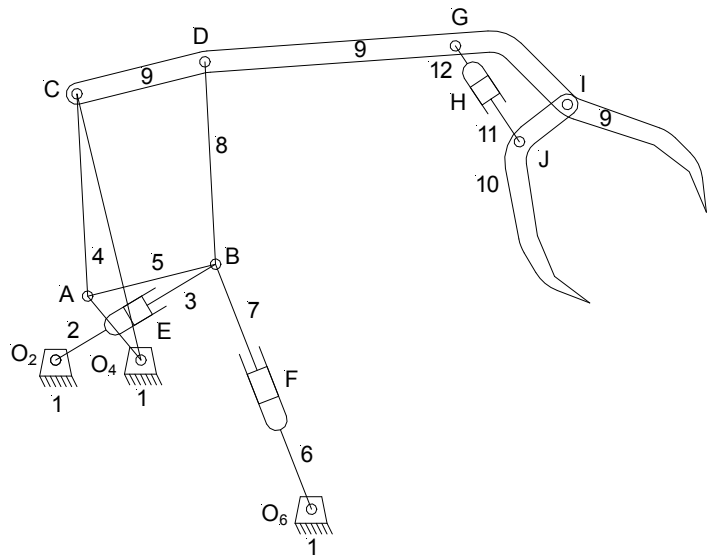

a) Wheels locked, no log in "claw."

Kutzbach's mobility equation (2.1c)

Number of links $L := 12$

Number of full joints $J_1 := 15$

Number of half joints $J_2 := 0$

$$M := 3\cdot(L - 1) - 2\cdot J_1 - J_2 \qquad M = 3$$

b) Wheels locked, log held tightly in the "claw." With a log held tightly between links 9 and 10 a structure will be formed by links 9 through 12 and the log so that there will only be 9 links and 11 joints active.

Number of links $L := 9$

Number of full joints $J_1 := 11$

Design of Machinery 6th edition Norton Solutions Manual

Number of half joints $J_2 := 0$

$$M := 3\cdot(L - 1) - 2\cdot J_1 - J_2 \qquad M = 2$$

c) Transporter moving in a straight line with the log holding mechanism inactive. There are two tires, the transporter frame, and the ground, making 4 links and two points of contact with the ground and two axels, making 4 joints.

Number of links $L := 4$

Number of full joints $J_1 := 4$

Number of half joints $J_2 := 0$

$$M := 3\cdot(L - 1) - 2\cdot J_1 - J_2 \qquad M = 1$$

Design of Machinery 6th edition Norton Solutions Manual

PROBLEM 2-62

Statement: Figure P2-21d shows a plow mechanism attached to a tractor. Draw its kinematic diagram and find its mobility including the earth as a "link."

a) When the tractor is stopped and the turnbuckle is fixed. (Hint: Consider the tractor and the wheel to be one with the earth.)

b) When the tractor is stopped and the turnbuckle is being adjusted. (Same hint.)

c) When the tractor is moving and the turnbuckle is fixed. (Hint: Add the moving tractor's DOF to those found in part a.)

Solution: See Figure P2-21e and Mathcad file P0262.

1. Draw a kinematic diagram of the mechanism with the ground, tractor wheels, and tractor frame as link 1. Joint O_4 is of order 2 and joint F is a half joint. The plow and its truss structure attach at joints D and E. Since the turnbuckle is fixed it can be modeled as a single binary link (6).

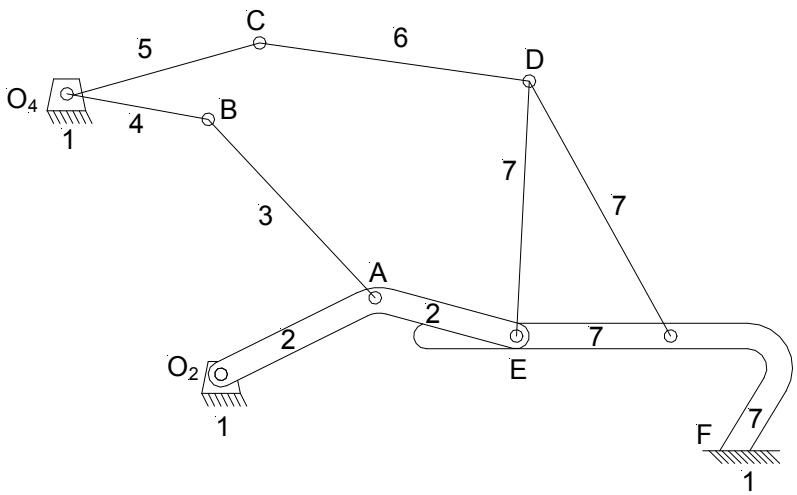

a) Tractor stopped and turnbuckle fixed.

Kutzbach's mobility equation (2.1c)

Number of links $L := 7$

Number of full joints $J_1 := 8$

Number of half joints $J_2 := 1$

$$M := 3\cdot(L - 1) - 2\cdot J_1 - J_2 \qquad M = 1$$

b) When the tractor is stopped and the turnbuckle is being adjusted. Between joints C and D we now have 2 net links (2 links threaded LH and RH on one end and the turnbuckle body) and 1 additional helical full joint.

Number of links $L := 8$

Number of full joints $J_1 := 9$

Design of Machinery 6th edition Norton Solutions Manual

Number of half joints $J_2 := 1$

$$M := 3\cdot(L - 1) - 2\cdot J_1 - J_2 \qquad M = 2$$

c) When the tractor is moving and the turnbuckle is fixed. If the tractor moved only in a straight line we would add 1 DOF to the 1 DOF that we got in part *a* for a total of $M = 2$. More realistically, the tractor can turn and move up and down hills so that we would add 3 DOF to the 1 DOF of part *a* to get a total of 4 DOF.

Design of Machinery 6th edition Norton Solutions Manual

PROBLEM 2-63

Statement: Figure P2-22 shows a Hart's inversor sixbar linkage. a) Is it a Watt or Stephenson linkage? b) Determine its inversion, i.e. is it a type I, II, or III?

Solution: See Figure P2-22, Figure 2-14, and Mathcad file P0263.

1. From Figure 2-14 we see that the Watt's sixbar has the two ternary links connected with a common joint while the Stephenson's sixbar has the two ternary links connected by binary links. Thus, Hart's inversor is a Watt's sixbar (links 1 and 2, the ternary links, are connected at a common joint). Further, the **Hart's linkage is a Watt's sixbar inversion I** since neither of the ternary links is grounded.

Design of Machinery 6th edition Norton Solutions Manual

PROBLEM 2-64

Statement: Figure P2-23 shows the top view of the partially open doors on one side of an entertainment center cabinet. The wooden doors are hinged to each other and one door is hinged to the cabinet. There is also a ternary, metal link attached to the cabinet and door through pin joints. A spring-loaded piston-in cylinder device attaches to the ternary link and the cabinet through pin joints. Draw a kinematic diagram of the door system and find the mobility of this mechanism.

Solution: See Figure P2-23 and Mathcad file P0264.

1. Draw the kinematic diagram of this sixbar mechanism. The spring-loaded piston is just an in-line sliding joint (links 5 and 6, and joint F). The doors are binary links (3 and 4), and the metal ternary link (2) has nodes at A, B, and C. Link 1 is the cabinet.

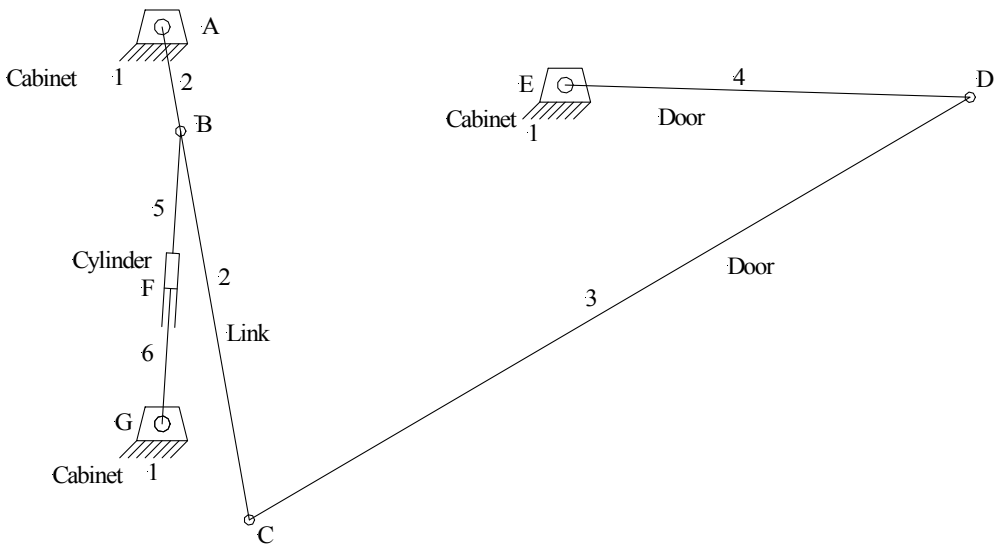

2. Use equation 2.1c (Kutzbach's modification) to calculate the mobility.

Number of links $L := 6$

Number of full joints $J_1 := 7$

Number of half joints $J_2 := 0$

$M := 3\cdot(L - 1) - 2\cdot J_1 - J_2$ $\qquad M = 1$

Design of Machinery 6th edition Norton Solutions Manual

PROBLEM 2-65

Statement: Figure P2-24a shows the seat and seat-back of a reclining chair with the linkage that connects them to the chair frame. Draw its kinematic diagram and determine its mobility with respect to the frame of the chair.

Solution: See Figure P2-24a and Mathcad file P0265.

1. Draw a kinematic diagram of the mechanism. The chair-back attaches to link 2 and the seat with the attached slider slot is link 3. The node at C is a half-joint as it allows two degrees of freedom.

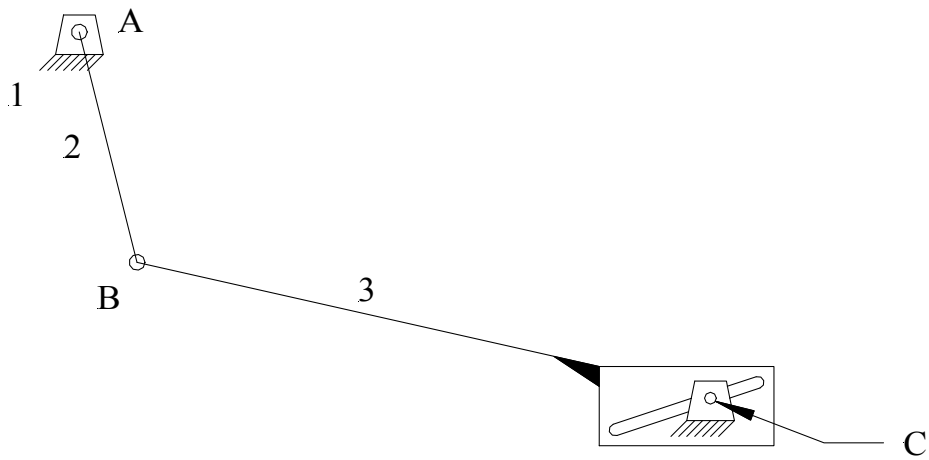

2. Determine the mobility of the mechanism.

Kutzbach's mobility equation (2.1c)

Number of links $L := 3$

Number of full joints $J_1 := 2$

Number of half joints $J_2 := 1$

$$M := 3\cdot(L - 1) - 2\cdot J_1 - J_2 \qquad M = 1$$

Design of Machinery 6th edition Norton Solutions Manual

PROBLEM 2-66

Statement: Figure P2-24b shows the mechanism used to extend the foot support on a reclining chair. Draw its kinematic diagram and determine its mobility with respect to the frame of the chair.

Solution: See Figure P2-24b and Mathcad file P0266.

1. Draw a kinematic diagram of the mechanism. Link 1 is the frame.

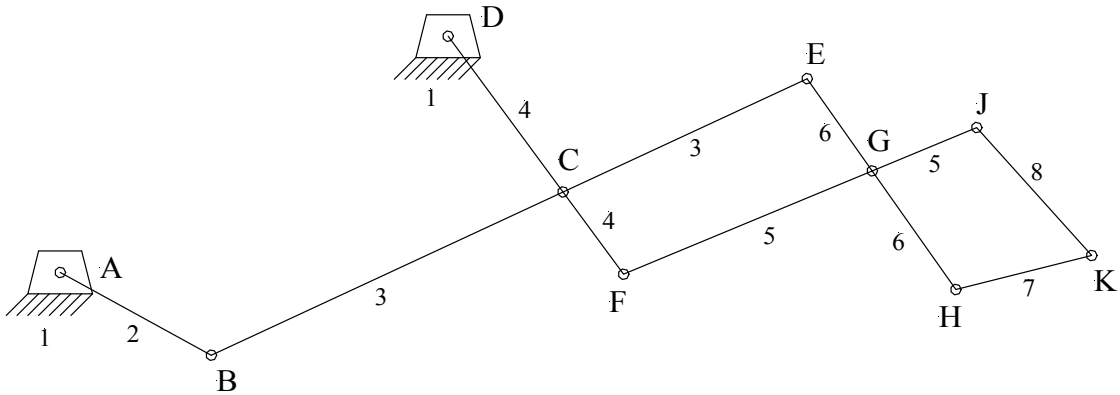

2. Determine the mobility of the mechanism.

Kutzbach's mobility equation (2.1c)

Number of links $L := 8$

Number of full joints $J_1 := 10$

Number of half joints $J_2 := 0$

$$M := 3\cdot(L - 1) - 2\cdot J_1 - J_2 \qquad M = 1$$

Design of Machinery 6th edition Norton Solutions Manual

PROBLEM 2-67

Statement: Figure P2-24b shows the mechanism used to extend the foot support on a reclining chair. Number the links, starting with 1. (Hint: Don't forget the "ground" link.) Letter the joints alphabetically, starting with *A*.

a. Using the link numbers, describe each link as binary, ternary, etc.

b. Using the joint letters, determine each joint's order.

c. Using the joint letters, determine whether each is a half or full joint.

Solution: See Figure P2-24b and Mathcad file P0267.

1. Label the link numbers and joint letters for Figure P2-24b.

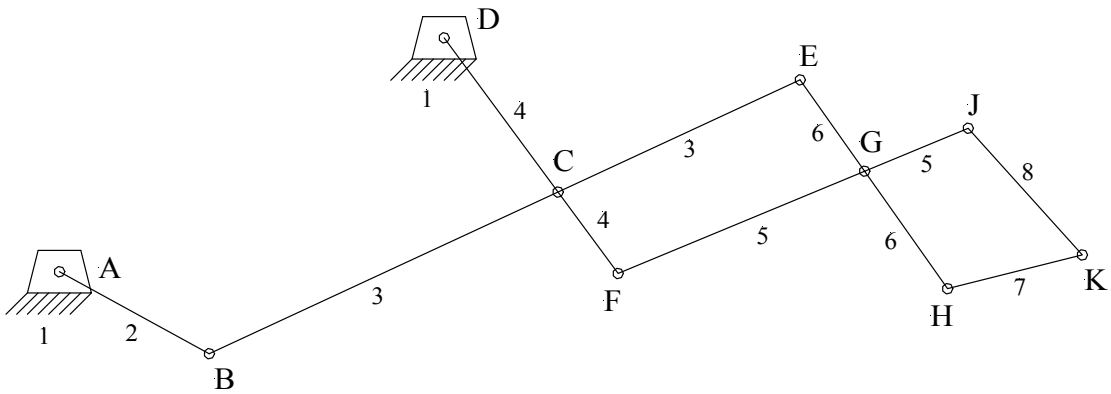

a. Using the link numbers, describe each link as binary, ternary, etc.

Link No.	Link Order
1	Binary
2	Binary
3	Ternary
4	Ternary
5	Ternary
6	Ternary
7	Binary
8	Binary

b,c. Using the joint letters, determine each joint's order and whether each is a half or full joint.

Joint Letter	Joint Order	Half/Full
A	1	Full
B	1	Full
C	1	Full
D	1	Half
E	1	Full
F	1	Full
G	1	Full
H	1	Full
J	1	Full
K	1	Full

Design of Machinery 6th edition Norton Solutions Manual

PROBLEM 2-68

Statement: Figure P2-24 shows a sixbar linkage. a) Is it a Watt or Stephenson linkage?
b) Determine its inversion, i.e. is it a type I, II, or III?

Solution: See Figure P2-24, Figure 2-14, and Mathcad file P0268.

1. From Figure 2-14 we see that the Watt's sixbar has the two ternary links connected with a common joint while the Stephenson's sixbar has the two ternary links connected by binary links. Thus, the sixbar linkage shown is a Watt's sixbar (links 3 and 4, the ternary links, are connected at a common joint). Further, the **linkage shown is a Watt's sixbar inversion I** since neither of the ternary links is grounded.

Design of Machinery 6th edition Norton Solutions Manual

PROBLEM 2-69

Statement: Use number synthesis to find all the possible link combinations for 1-*DOF*, up to 5 links, to quaternary order, using one cylindrical joint and revolute joints for the remainder.

Solution: See Mathcad file P0269.

1. Solve equation 2.1*c* for the number of full joints, J_1, with $M = 1$ and $J_2 = 1$.

$$M = 3(L - 1) - 2J_1 - J_2 \qquad M = 1 \qquad J_2 = 1$$

$$J_1 = \frac{3 \cdot L - 5}{2}$$

2. From equation 2.4*d* we see that the number of full joints is

$$J_1 = \frac{2 \cdot B + 3 \cdot T + 4 \cdot Q}{2} - 1$$

since there is one half joint and from equation 2.4*a*, the number of links is

$$L = B + T + Q$$

3. Substitute J_1 and L into the first equation and solve for the valid combinations of B, T, and Q.

$$\frac{2 \cdot B + 3 \cdot T + 4 \cdot Q}{2} - 1 = \frac{3 \cdot B + 3 \cdot T + 3 \cdot Q}{2} - \frac{5}{2}$$

$$B - Q = 3$$

Note that, as in the case of only full joints, the ternary links drop out and we are left with the possible combinations of binary and quaternary links only. The only possible combination of B and Q is

$$B = 3 \qquad \text{and} \qquad Q = 0$$

For $B = 4$, $Q = 1$ and higher values the additional links are redundant and the mechanism reduces to the case of $B = 3$, $Q = 0$. The mechanism has three binary links, two full joints, and one half joint and is illustrated in Figure P2-26.

Design of Machinery 6th edition Norton Solutions Manual

PROBLEM 2-70

Statement: Use number synthesis to find all the possible link combinations for 3-*DOF*, up to 8 links, to quaternary order, using one cylindrical joint and revolute joints for the remainder.

Solution: See Mathcad file P0269.

1. Solve equation 2.1*c* for the number of full joints, J_1, with $M = 3$ and $J_2 = 1$.

$$M = 3(L - 1) - 2J_1 - J_2 \qquad M = 3 \qquad J_2 = 1$$

$$J_1 = \frac{3 \cdot L - 7}{2}$$

2. From equation 2.4*d* we see that the number of full joints is

$$J_1 = \frac{2 \cdot B + 3 \cdot T + 4 \cdot Q}{2} - 1$$

since there is one half joint and from equation 2.4*a*, the number of links is

$$L = B + T + Q$$

3. Substitute J_1 and L into the first equation and solve for the valid combinations of B, T, and Q.

$$\frac{2 \cdot B + 3 \cdot T + 4 \cdot Q}{2} - 1 = \frac{3 \cdot B + 3 \cdot T + 3 \cdot Q}{2} - \frac{7}{2}$$

$$B - Q = 5$$

Note that, as in the case of only full joints, the ternary links drop out and we are left with the possible combinations of binary and quaternary links only. The only possible combination of B and Q is

$$B = 5 \qquad \text{and} \qquad Q = 0$$

For $B = 6$, $Q = 1$ and higher values the additional links are redundant and the mechanism reduces to the case of $B = 5$, $Q = 0$. The mechanism has five binary links, five full joints, and one half joint and is illustrated in Figure P2-1(*d*). Note that in this figure there are an additional two ternary links that do not change the *DOF* of the mechanism.

Design of Machinery 6th edition Norton Solutions Manual

PROBLEM 2-71

Statement: Calculate the mobility of the linkage in Figure P2-26.

Solution: See Figure P2-26 and Mathcad file P0271.

1. Use equation 2.1c (Kutzbach's modification) to calculate the mobility.

a. Number of links $L := 3$

Number of full joints $J_1 := 2$

Number of half joints $J_2 := 1$

$$M := 3\cdot(L - 1) - 2\cdot J_1 - J_2$$

$$M = 1$$

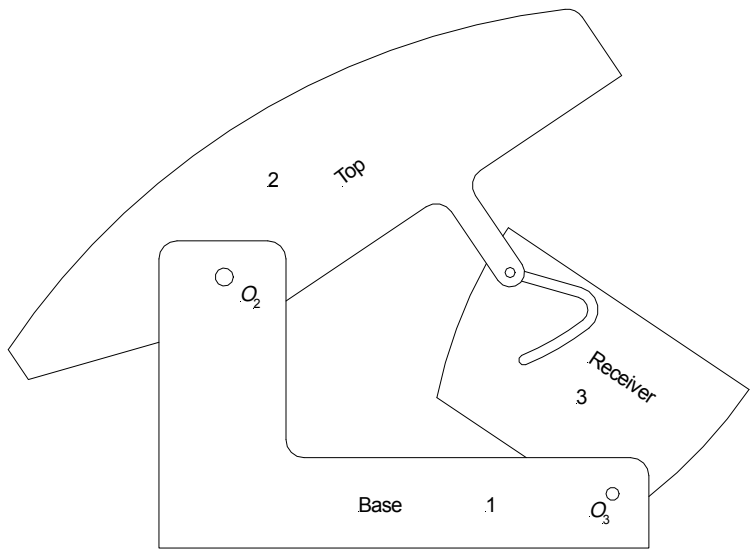

PROBLEM 2-72

Statement: For the mechanism in Figure P2-26, number the links, starting with 1. (Hint: Don't forget the "ground" link.) Letter the joints alphabetically, starting with *A*.

a. Using the link numbers, describe each link as binary, ternary, etc.

b. Using the joint letters, determine each joint's order.

c. Using the joint letters, determine whether each is a half or full joint.

Solution: See Figure P2-26 and Mathcad file P0272.

1. Label the link numbers and joint letters for Figure P2-26.

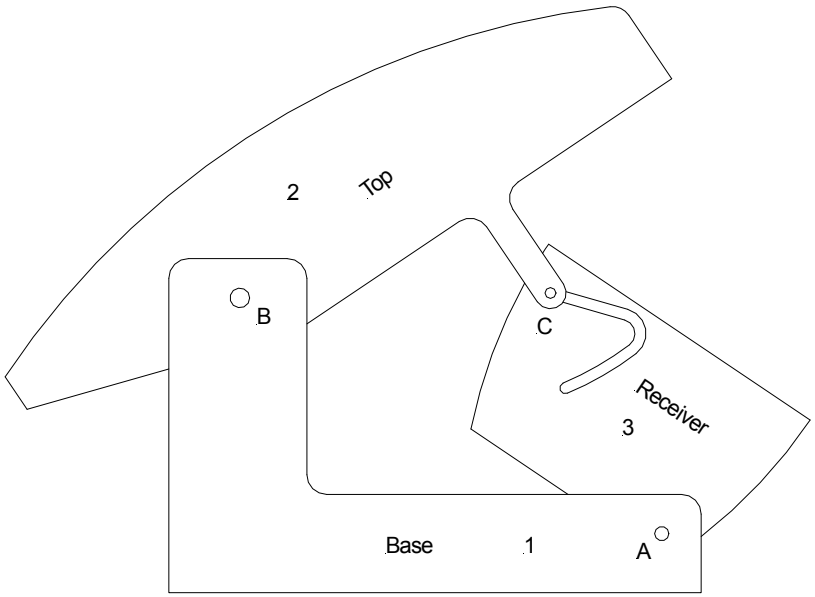

a. Using the link numbers, describe each link as binary, ternary, etc.

Link No.	Link Order
1	Binary
2	Binary
3	Binary

b,c. Using the joint letters, determine each joint's order and whether each is a half or full joint.

Joint Letter	Joint Order	Half/Full
A	1	Full
B	1	Full
C	1	Half

Design of Machinery 6th edition Norton Solutions Manual

PROBLEM 2-73

Statement: Figure P2-27 is an schematic representation of an exercise machine. Number the links, starting with 1. (Hint: Don't forget the "ground" link.) Letter the joints alphabetically, starting with *A*.

a. Using the link numbers, describe each link as binary, ternary, etc.

b. Using the joint letters, determine each joint's order.

c. Using the joint letters, determine whether each is a half or full joint.

Solution: See Figure P2-27 and Mathcad file P0273.

1. Label the link numbers and joint letters for Figure P2-27.

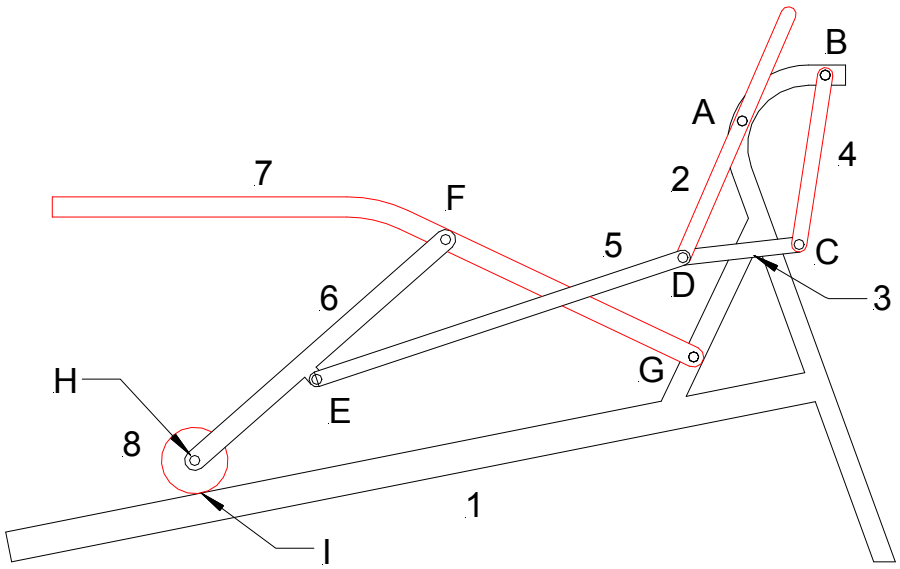

a. Using the link numbers, describe each link as binary, ternary, etc.

Link No.	Link Order
1	Quaternary
2	Binary
3	Binary
4	Binary
5	Binary
6	Ternary
7	Binary
8	Binary

b,c. Using the joint letters, determine each joint's order and whether each is a half or full joint.

Joint Letter	Joint Order	Half/Full
A	1	Full
B	1	Full
C	1	Full
D	2	Full

E	1	Full
F	1	Full
G	1	Full
H	1	Full
I	1	Full, assuming no slip

Design of Machinery 6th edition Norton Solutions Manual

PROBLEM 2-74

Statement: Find the mobility of the linkage in Figure P2-27.

Solution: See Figure P2-27 and Mathcad file P0274.

1. Use equation 2.1c (Kutzbach's modification) to calculate the mobility.

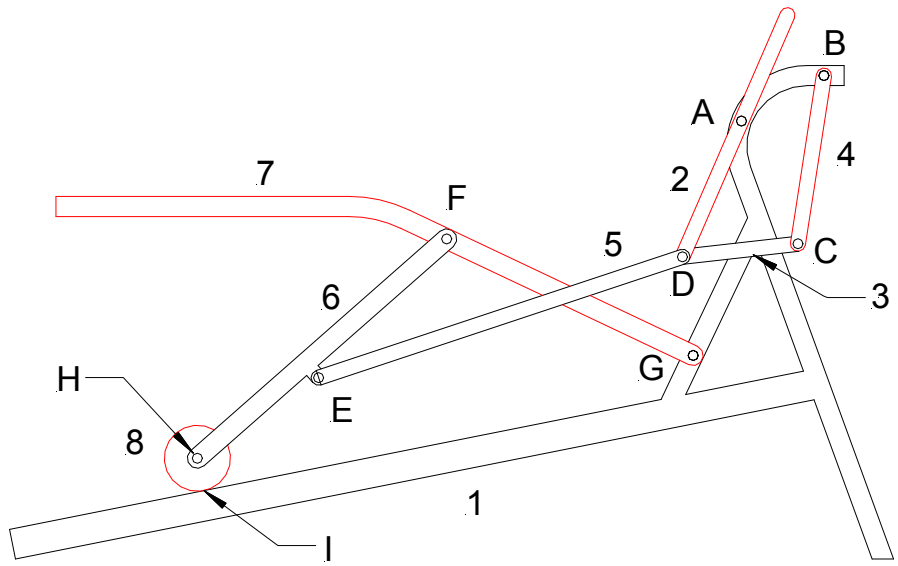

a. Number of links $L := 8$

Number of full joints $J_1 := 10$ (Joint D is of order 2 and, therefore counts as 2 joints)

Number of half joints $J_2 := 0$

$$M := 3\cdot(L - 1) - 2\cdot J_1 - J_2$$

$$M = 1$$

PROBLEM 2-75

Statement: Calculate the Grashof condition of the fourbar mechanisms defined below. Build cardboard models of the linkages and describe the motions of each inversion. Link lengths are in millimeters.

a.	80	140	280	360
b.	80	160	240	320
c.	80	180	280	360

Solution: See Mathcad file P0275

1. Use inequality 2.8 to determine the Grashof condition.

$$Condition(a,b,c,d) := \left| \begin{array}{l} S \leftarrow min(a,b,c,d) \\ L \leftarrow max(a,b,c,d) \\ SL \leftarrow S + L \\ PQ \leftarrow a + b + c + d - SL \\ return \ \text{"Grashof"} \quad if \ SL < PQ \\ return \ \text{"Special Grashof"} \quad if \ SL = PQ \\ return \ \text{"non-Grashof"} \quad otherwise \end{array} \right.$$

a. $Condition(80,140,280,360) = \text{"non-Grashof"}$

b. $Condition(80,160,240,320) = \text{"Special Grashof"}$

This is a special case Grashof since the sum of the shortest and longest is equal to the sum of the other two link lengths.

c. $Condition(80,180,280,360) = \text{"Grashof"}$

Design of Machinery 6th edition Norton Solutions Manual

PROBLEM 2-76

Statement: The drum brake mechanism in Figure P2-4(g) is a fourbar linkage with an alternate output dyad. The input is link 2 and the outputs are links 4 and 6. The input fourbar consists of links 1, 2, 3, and 4. The alternate output dyad consists of links 5 and 6. The cross-hatched pivot pins at O_2, O_4 and O_6 are attached to the ground link (1). Determine the Grashof condition and Barker Classification of the input fourbar.

Given: $L_1 := 87$ $L_2 := 49$ $L_3 := 100$ $L_4 := 153$

Solution: See Figure P2-4, Table 2-4, and Mathcad file P0276.

1. Use inequality 2.8 to determine the Grashof condition.

$$Condition(a,b,c,d) := \left| \begin{array}{l} S \leftarrow min(a,b,c,d) \\ L \leftarrow max(a,b,c,d) \\ SL \leftarrow S + L \\ PQ \leftarrow a + b + c + d - SL \\ return \ \text{"Grashof"} \quad if \ SL < PQ \\ return \ \text{"Special Grashof"} \quad if \ SL = PQ \\ return \ \text{"non-Grashof"} \quad otherwise \end{array} \right.$$

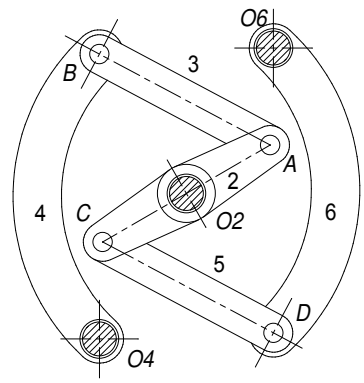

$$Condition\left(L_1, L_2, L_3, L_4\right) = \text{"non-Grashof"}$$

2. From Table 2-4 we see that, as a non-Grashof fourbar this is a class II mechanism. Since link 4 is the longest link it is a class II-4 rocker-rocker-rocker.

Design of Machinery 6th edition Norton Solutions Manual