Statics and Mechanics of Materials 3rd edition Beer Solutions Manual

SKU: 9781260226751-SOLUTIONS

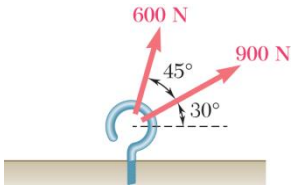

PROBLEM 2.1

Two forces are applied as shown to a hook. Determine graphically the magnitude and direction of their resultant using (*a*) the parallelogram law, (*b*) the triangle rule.

SOLUTION

(*a*) Parallelogram law:

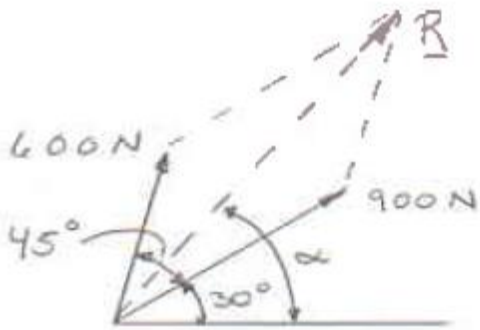

(*b*) Triangle rule:

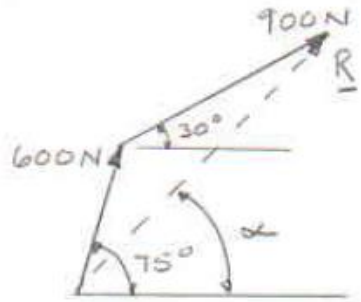

We measure: $R = 1391$ kN, $\alpha = 47.8°$ $\mathbf{R} = 1391$ N $\measuredangle$ 47.8° ◀

Copyright © McGraw-Hill Education. This is proprietary material solely for authorized instructor use. Not authorized for sale or distribution in any manner. This document may not be copied, scanned, duplicated, forwarded, distributed, or posted on a website, in whole or part.

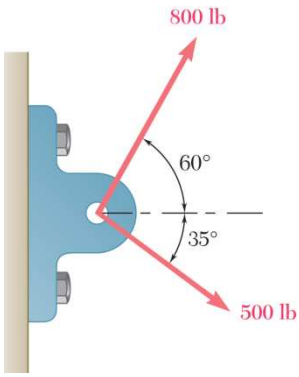

PROBLEM 2.2

Two forces are applied as shown to a bracket support. Determine graphically the magnitude and direction of their resultant using (*a*) the parallelogram law, (*b*) the triangle rule.

SOLUTION

(*a*) Parallelogram law:

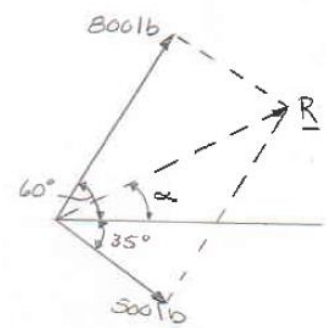

(*b*) Triangle rule:

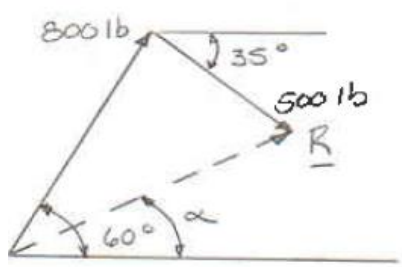

We measure: $R = 906$ lb, $\alpha = 26.6°$ $R = 906 \text{ lb} \measuredangle 26.6°$ ◀

Copyright © McGraw-Hill Education. All rights reserved. No reproduction or distribution without the prior written consent of McGraw-Hill Education.

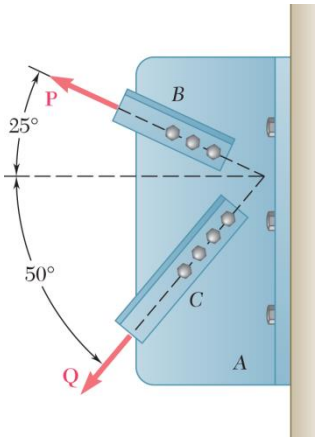

PROBLEM 2.3

Two structural members B and C are bolted to bracket A. Knowing that both members are in tension and that P = 10 kN and Q = 15 kN, determine graphically the magnitude and direction of the resultant force exerted on the bracket using (a) the parallelogram law, (b) the triangle rule.

SOLUTION

(a) Parallelogram law:

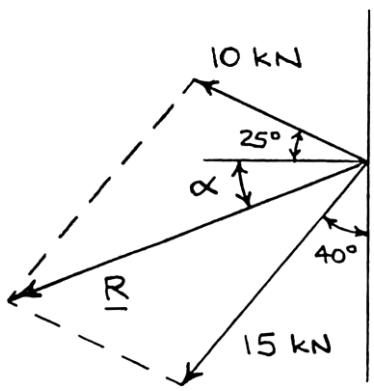

(b) Triangle rule:

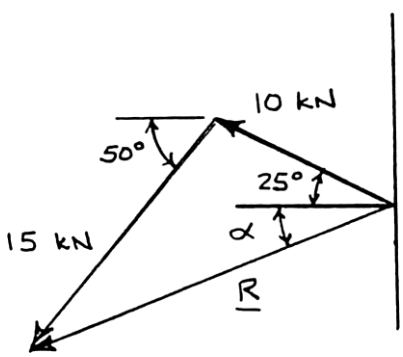

We measure: $R = 20.1$ kN, $\alpha = 21.2°$ $\mathbf{R} = 20.1\text{ kN} \measuredangle 21.2°$ ◀

Copyright © McGraw-Hill Education. All rights reserved. No reproduction or distribution without the prior written consent of McGraw-Hill Education.

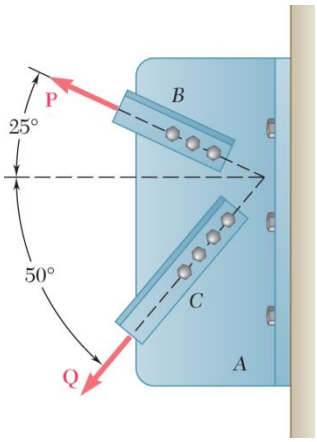

PROBLEM 2.4

Two structural members B and C are bolted to bracket A. Knowing that both members are in tension and that P = 6 kips and Q = 4 kips, determine graphically the magnitude and direction of the resultant force exerted on the bracket using (a) the parallelogram law, (b) the triangle rule.

SOLUTION

(a) Parallelogram law:

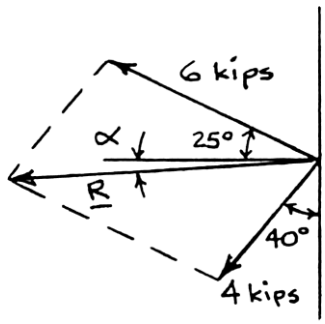

(b) Triangle rule:

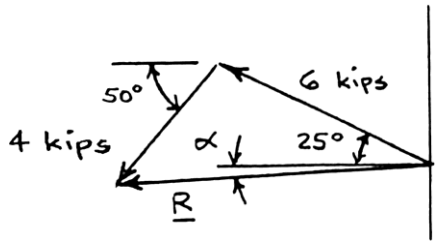

We measure: $R = 8.03$ kips, $\alpha = 3.8°$ $\mathbf{R} = 8.03$ kips $\measuredangle$ 3.8° ◀

Copyright © McGraw-Hill Education. All rights reserved. No reproduction or distribution without the prior written consent of McGraw-Hill Education.

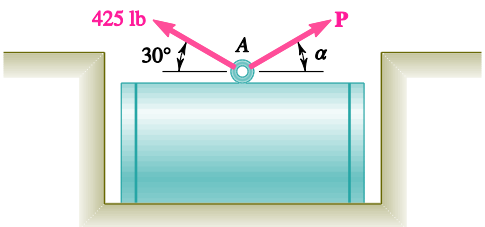

PROBLEM 2.5

A steel tank is to be positioned in an excavation. Knowing that $\alpha = 20°$, determine by trigonometry (*a*) the required magnitude of the force **P** if the resultant **R** of the two forces applied at *A* is to be vertical, (*b*) the corresponding magnitude of **R**.

SOLUTION

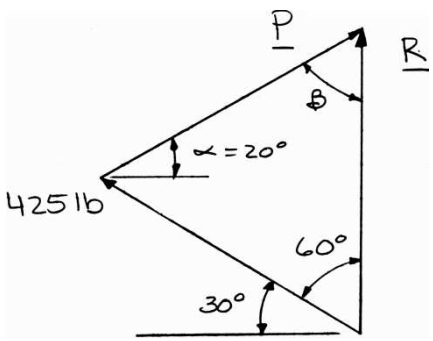

Using the triangle rule and the law of sines:

(a)

$$\beta + 50° + 60° = 180°$$

$$\beta = 180° - 50° - 60°$$

$$= 70°$$

$$\frac{425 \text{ lb}}{\sin 70°} = \frac{P}{\sin 60°}$$

$P = 392$ lb ◀

(*b*)

$$\frac{425 \text{ lb}}{\sin 70°} = \frac{R}{\sin 50°}$$

$R = 346$ lb ◀

Copyright © McGraw-Hill Education. All rights reserved. No reproduction or distribution without the prior written consent of McGraw-Hill Education.

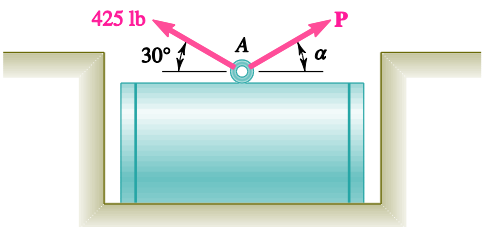

PROBLEM 2.6

A steel tank is to be positioned in an excavation. Knowing that the magnitude of **P** is 500 lb, determine by trigonometry (*a*) the required angle α if the resultant **R** of the two forces applied at *A* is to be vertical, (*b*) the corresponding magnitude of **R**.

SOLUTION

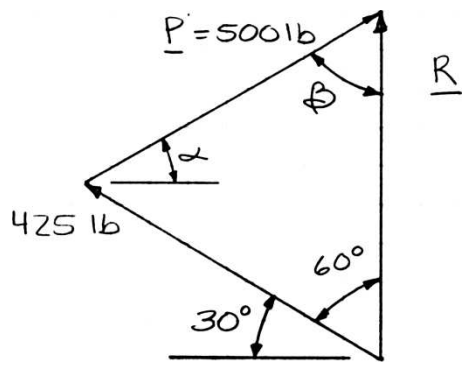

Using the triangle rule and the law of sines:

(*a*)

$$(\alpha + 30°) + 60° + \beta = 180°$$

$$\beta = 180° - (\alpha + 30°) - 60°$$

$$\beta = 90° - \alpha$$

$$\frac{\sin(90° - \alpha)}{425 \text{ lb}} = \frac{\sin 60°}{500 \text{ lb}}$$

$$90° - \alpha = 47.402° \qquad \alpha = 42.6° \blacktriangleleft$$

(*b*)

$$\frac{R}{\sin(42.598° + 30°)} = \frac{500 \text{ lb}}{\sin 60°} \qquad R = 551 \text{ lb} \blacktriangleleft$$

Copyright © McGraw-Hill Education. All rights reserved. No reproduction or distribution without the prior written consent of McGraw-Hill Education.

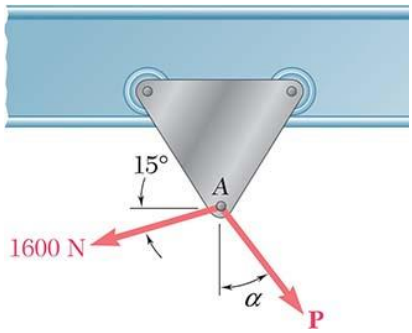

PROBLEM 2.7

A trolley that moves along a horizontal beam is acted upon by two forces as shown. (*a*) Knowing that $\alpha = 25°$, determine by trigonometry the magnitude of the force **P** so that the resultant force exerted on the trolley is vertical. (*b*) What is the corresponding magnitude of the resultant?

SOLUTION

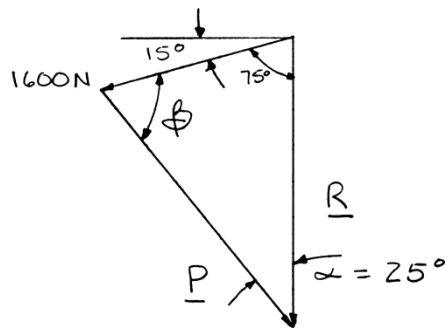

Using the triangle rule and the law of sines:

(*a*)
$$\frac{1600\text{ N}}{\sin 25°} = \frac{P}{\sin 75°}$$
$P = 3660\text{ N}$ ◀

(*b*)
$$25° + \beta + 75° = 180°$$
$$\beta = 180° - 25° - 75°$$
$$= 80°$$
$$\frac{1600\text{ N}}{\sin 25°} = \frac{R}{\sin 80°}$$
$R = 3730\text{ N}$ ◀

Copyright © McGraw-Hill Education. All rights reserved. No reproduction or distribution without the prior written consent of McGraw-Hill Education.

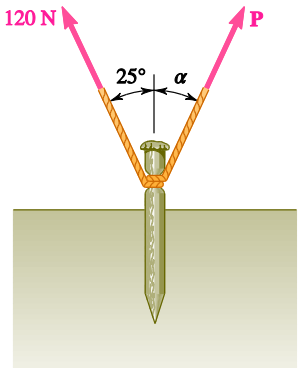

PROBLEM 2.8

A stake is being pulled out of the ground by means of two ropes as shown. Knowing that $\alpha = 30°$, determine by trigonometry (*a*) the magnitude of the force **P** so that the resultant force exerted on the stake is vertical, (*b*) the corresponding magnitude of the resultant.

SOLUTION

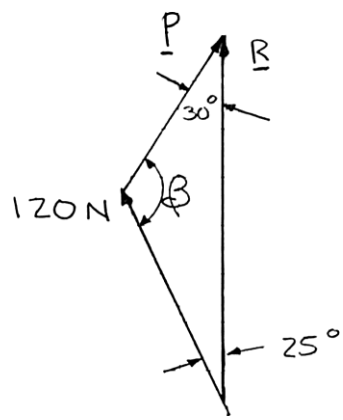

Using the triangle rule and the law of sines:

(*a*)
$$\frac{120\text{ N}}{\sin 30°} = \frac{P}{\sin 25°} \qquad P = 101.4\text{ N} \blacktriangleleft$$

(*b*)
$$30° + \beta + 25° = 180°$$
$$\beta = 180° - 25° - 30°$$
$$= 125°$$
$$\frac{120\text{ N}}{\sin 30°} = \frac{R}{\sin 125°} \qquad R = 196.6\text{ N} \blacktriangleleft$$

Copyright © McGraw-Hill Education. All rights reserved. No reproduction or distribution without the prior written consent of McGraw-Hill Education.

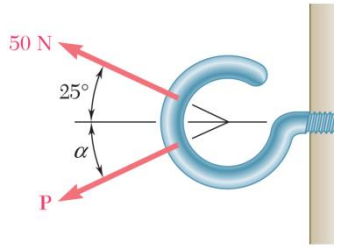

PROBLEM 2.9

Two forces are applied as shown to a hook support. Knowing that the magnitude of **P** is 35 N, determine by trigonometry (*a*) the required angle α if the resultant **R** of the two forces applied to the support is to be horizontal, (*b*) the corresponding magnitude of **R**.

SOLUTION

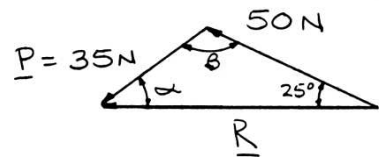

Using the triangle rule and law of sines:

(*a*)
$$\frac{\sin\alpha}{50\text{ N}} = \frac{\sin 25°}{35\text{ N}}$$
$$\sin\alpha = 0.60374$$
$$\alpha = 37.138°$$
$$\alpha = 37.1° \blacktriangleleft$$

(*b*)
$$\alpha + \beta + 25° = 180°$$
$$\beta = 180° - 25° - 37.138°$$
$$= 117.862°$$
$$\frac{R}{\sin 117.862°} = \frac{35\text{ N}}{\sin 25°}$$
$$R = 73.2\text{ N} \blacktriangleleft$$

Copyright © McGraw-Hill Education. All rights reserved. No reproduction or distribution without the prior written consent of McGraw-Hill Education.

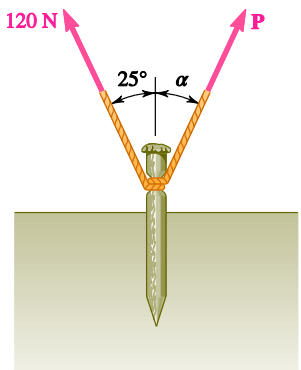

PROBLEM 2.10

For the stake of Prob. 2.8, knowing that the tension in one rope is 120 N, determine by trigonometry the magnitude and direction of the force **P** so that the resultant is a vertical force of 160 N.

PROBLEM 2.8 A stake is being pulled out of the ground by means of two ropes as shown. Knowing that $\alpha = 30°$, determine by trigonometry (*a*) the magnitude of the force **P** so that the resultant force exerted on the stake is vertical, (*b*) the corresponding magnitude of the resultant.

SOLUTION

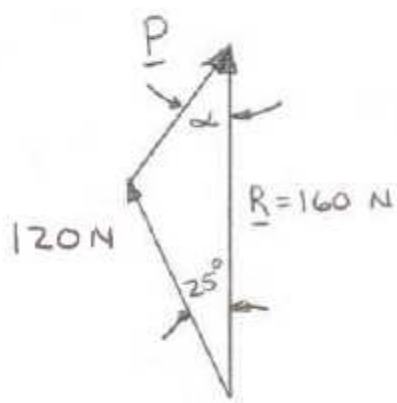

Using the laws of cosines and sines:

$$P^2 = (120\text{ N})^2 + (160\text{ N})^2 - 2(120\text{ N})(160\text{ N})\cos 25°$$
$$P = 72.096\text{ N}$$

And

$$\frac{\sin\alpha}{120\text{ N}} = \frac{\sin 25°}{72.096\text{ N}}$$
$$\sin\alpha = 0.70343$$
$$\alpha = 44.703°$$

$\mathbf{P} = 72.1\text{ N} \measuredangle 44.7°$ ◀

Copyright © McGraw-Hill Education. All rights reserved. No reproduction or distribution without the prior written consent of McGraw-Hill Education.

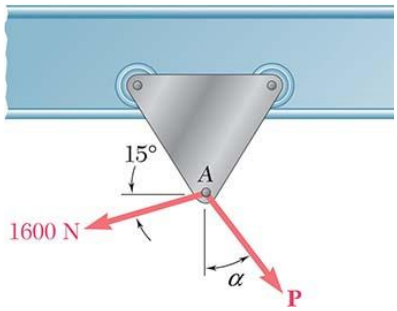

PROBLEM 2.11

A trolley that moves along a horizontal beam is acted upon by two forces as shown. Determine by trigonometry the magnitude and direction of the force **P** so that the resultant is a vertical force of 2500 N.

SOLUTION

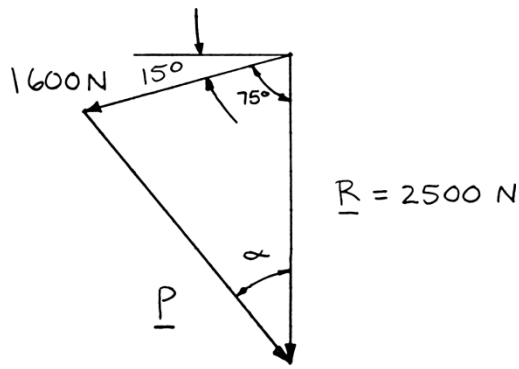

Using the law of cosines:

$$P^2 = (1600\text{ N})^2 + (2500\text{ N})^2 - 2(1600\text{ N})(2500\text{ N})\cos 75°$$

$$P = 2596\text{ N}$$

Using the law of sines:

$$\frac{\sin\alpha}{1600\text{ N}} = \frac{\sin 75°}{2596\text{ N}}$$

$$\alpha = 36.5°$$

P is directed $90° - 36.5°$ or $53.5°$ below the horizontal. $\mathbf{P} = 2600\text{ N} \searrow 53.5°$ ◀

Copyright © McGraw-Hill Education. All rights reserved. No reproduction or distribution without the prior written consent of McGraw-Hill Education.

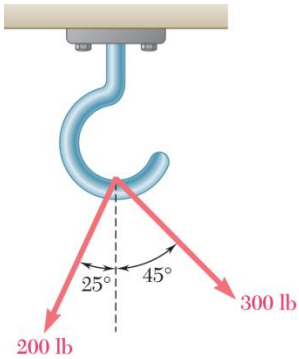

PROBLEM 2.12

For the hook support shown, determine by trigonometry the magnitude and direction of the resultant of the two forces applied to the support.

SOLUTION

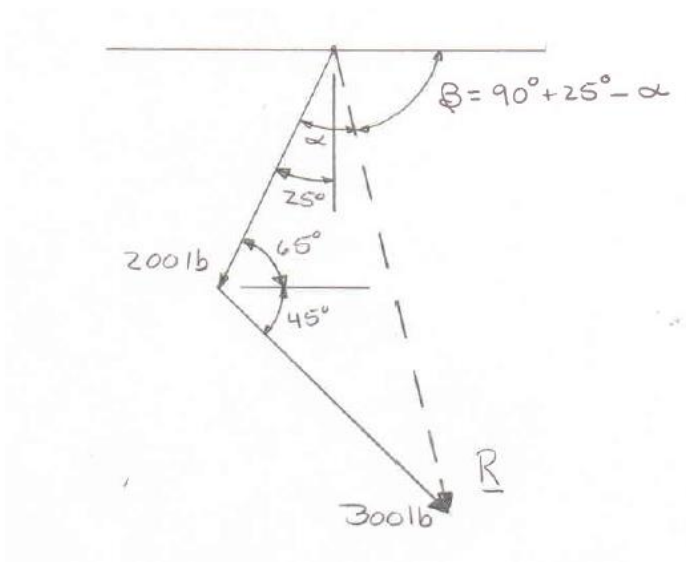

Using the law of cosines:

$$R^2 = (200\text{ lb})^2 + (300\text{ lb})^2 - 2(200\text{ lb})(300\text{ lb})\cos(45^\circ + 65^\circ)$$

$$R = 413.57\text{ lb}$$

Using the law of sines:

$$\frac{\sin\alpha}{300\text{ lb}} = \frac{\sin(45^\circ + 65^\circ)}{413.57\text{ lb}}$$

$$\alpha = 42.972^\circ$$

$$\beta = 90^\circ + 25^\circ - 42.972^\circ$$

$\mathbf{R} = 414\text{ lb} \measuredangle 72.0^\circ$ ◀

Copyright © McGraw-Hill Education. All rights reserved. No reproduction or distribution without the prior written consent of McGraw-Hill Education.

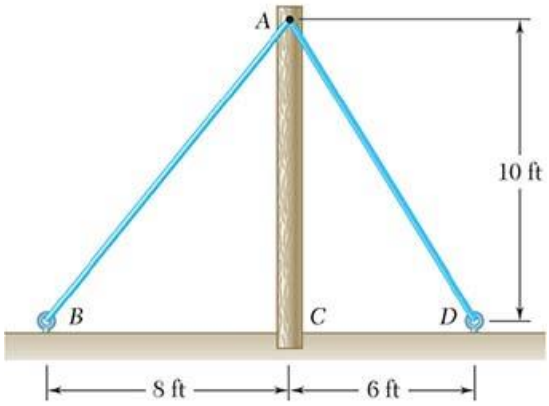

PROBLEM 2.13

The cable stays *AB* and *AD* help support pole *AC*. Knowing that the tension is 120 lb in *AB* and 40 lb in *AD*, determine graphically the magnitude and direction of the resultant of the forces exerted by the stays at *A* using (*a*) the parallelogram law, (*b*) the triangle rule.

SOLUTION

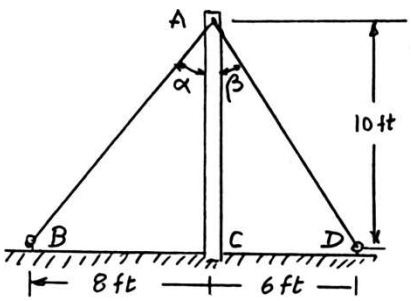

$$\tan\alpha = \frac{8}{10}$$
$$\alpha = 38.66°$$
$$\tan\beta = \frac{6}{10}$$
$$\beta = 30.96°$$

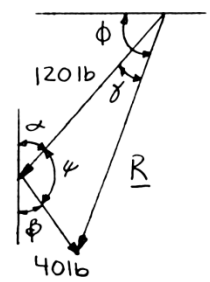

Using the triangle rule:
$$\alpha + \beta + \psi = 180°$$
$$38.66° + 30.96° + \psi = 180°$$
$$\psi = 110.38°$$

Using the law of cosines:
$$R^2 = (120\text{ lb})^2 + (40\text{ lb})^2 - 2(120\text{ lb})(40\text{ lb})\cos 110.38°$$
$$R = 139.08\text{ lb}$$

Using the law of sines:
$$\frac{\sin\gamma}{40\text{ lb}} = \frac{\sin 110.38°}{139.08\text{ lb}}$$
$$\gamma = 15.64°$$
$$\phi = (90° - \alpha) + \gamma$$
$$\phi = (90° - 38.66°) + 15.64°$$
$$\phi = 66.98°$$

$\mathbf{R} = 139.1\text{ lb} \measuredangle 67.0°$ ◀

Copyright © McGraw-Hill Education. All rights reserved. No reproduction or distribution without the prior written consent of McGraw-Hill Education.

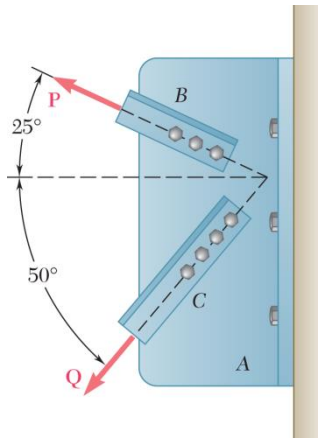

PROBLEM 2.14

Solve Problem 2.4 by trigonometry.

PROBLEM 2.4: Two structural members B and C are bolted to bracket A. Knowing that both members are in tension and that P = 6 kips and Q = 4 kips, determine graphically the magnitude and direction of the resultant force exerted on the bracket using (a) the parallelogram law, (b) the triangle rule.

SOLUTION

Using the force triangle and the laws of cosines and sines:

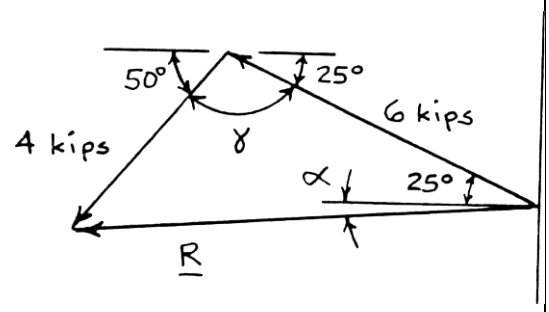

We have:

$$\gamma = 180° - (50° + 25°)$$
$$= 105°$$

Then

$$R^2 = (4\text{ kips})^2 + (6\text{ kips})^2 - 2(4\text{ kips})(6\text{ kips})\cos 105°$$
$$= 64.423\text{ kips}^2$$
$$R = 8.0264\text{ kips}$$

And

$$\frac{4\text{ kips}}{\sin(25° + \alpha)} = \frac{8.0264\text{ kips}}{\sin 105°}$$
$$\sin(25° + \alpha) = 0.48137$$
$$25° + \alpha = 28.775°$$
$$\alpha = 3.775°$$

$\mathbf{R} = 8.03\text{ kips} \measuredangle 3.8°$ ◀

Copyright © McGraw-Hill Education. All rights reserved. No reproduction or distribution without the prior written consent of McGraw-Hill Education.

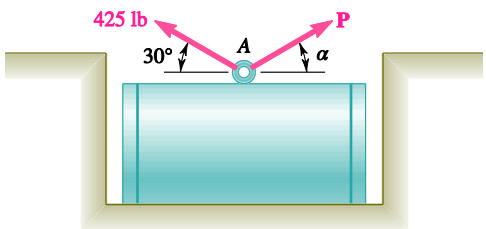

PROBLEM 2.15

For the steel tank of Prob. 2.5, determine by trigonometry (*a*) the magnitude and direction of the smallest force **P** for which the resultant **R** of the two forces applied at *A* is vertical, (*b*) the corresponding magnitude of **R.**

SOLUTION

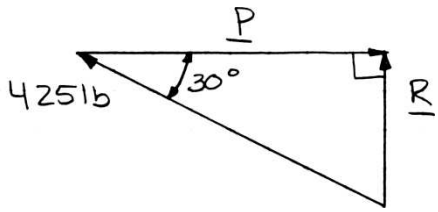

The smallest force *P* will be perpendicular to *R*.

(*a*) $P = (425 \text{ lb})\cos 30°$ $\qquad$ $\mathbf{P} = 368 \text{ lb} \rightarrow$ ◀

(*b*) $R = (425 \text{ lb})\sin 30°$ $\qquad$ $R = 213 \text{ lb}$ ◀

Copyright © McGraw-Hill Education. All rights reserved. No reproduction or distribution without the prior written consent of McGraw-Hill Education.

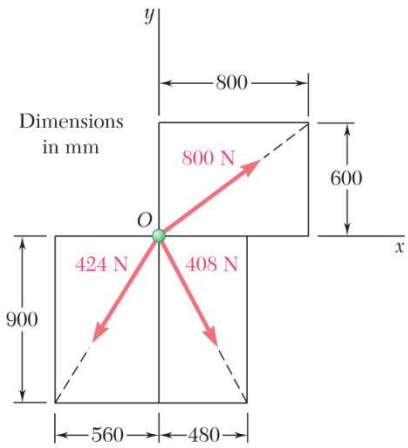

PROBLEM 2.16

Determine the x and y components of each of the forces shown.

SOLUTION

Compute the following distances:

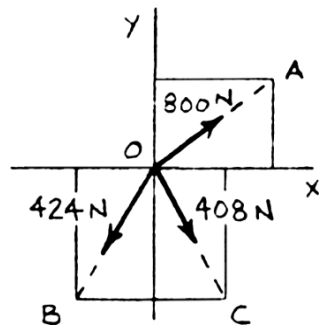

$$OA = \sqrt{(600)^2 + (800)^2}$$
$$= 1000 \text{ mm}$$
$$OB = \sqrt{(560)^2 + (900)^2}$$
$$= 1060 \text{ mm}$$
$$OC = \sqrt{(480)^2 + (900)^2}$$
$$= 1020 \text{ mm}$$

800-N Force:

$$F_x = +(800 \text{ N})\frac{800}{1000} \qquad F_x = +640 \text{ N} \blacktriangleleft$$

$$F_y = +(800 \text{ N})\frac{600}{1000} \qquad F_y = +480 \text{ N} \blacktriangleleft$$

424-N Force:

$$F_x = -(424 \text{ N})\frac{560}{1060} \qquad F_x = -224 \text{ N} \blacktriangleleft$$

$$F_y = -(424 \text{ N})\frac{900}{1060} \qquad F_y = -360 \text{ N} \blacktriangleleft$$

408-N Force:

$$F_x = +(408 \text{ N})\frac{480}{1020} \qquad F_x = +192.0 \text{ N} \blacktriangleleft$$

$$F_y = -(408 \text{ N})\frac{900}{1020} \qquad F_y = -360 \text{ N} \blacktriangleleft$$

Copyright © McGraw-Hill Education. All rights reserved. No reproduction or distribution without the prior written consent of McGraw-Hill Education.

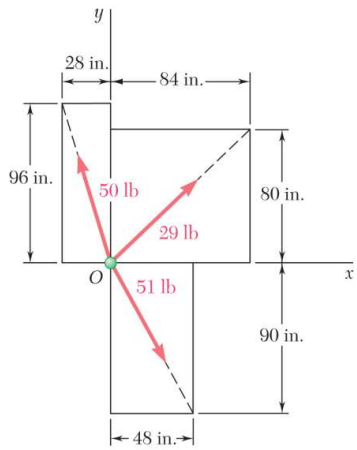

PROBLEM 2.17

Determine the x and y components of each of the forces shown.

SOLUTION

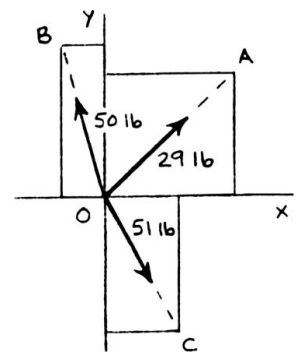

Compute the following distances:

$$OA = \sqrt{(84)^2 + (80)^2}$$
$$= 116 \text{ in.}$$
$$OB = \sqrt{(28)^2 + (96)^2}$$
$$= 100 \text{ in.}$$
$$OC = \sqrt{(48)^2 + (90)^2}$$
$$= 102 \text{ in.}$$

29-lb Force:

$$F_x = +(29 \text{ lb})\frac{84}{116} \qquad F_x = +21.0 \text{ lb} \blacktriangleleft$$

$$F_y = +(29 \text{ lb})\frac{80}{116} \qquad F_y = +20.0 \text{ lb} \blacktriangleleft$$

50-lb Force:

$$F_x = -(50 \text{ lb})\frac{28}{100} \qquad F_x = -14.00 \text{ lb} \blacktriangleleft$$

$$F_y = +(50 \text{ lb})\frac{96}{100} \qquad F_y = +48.0 \text{ lb} \blacktriangleleft$$

51-lb Force:

$$F_x = +(51 \text{ lb})\frac{48}{102} \qquad F_x = +24.0 \text{ lb} \blacktriangleleft$$

$$F_y = -(51 \text{ lb})\frac{90}{102} \qquad F_y = -45.0 \text{ lb} \blacktriangleleft$$

Copyright © McGraw-Hill Education. All rights reserved. No reproduction or distribution without the prior written consent of McGraw-Hill Education.

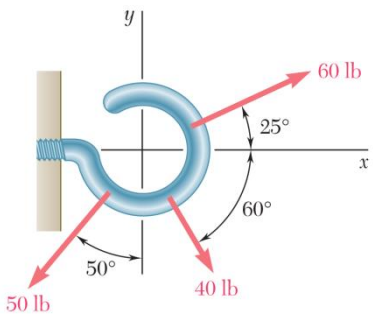

PROBLEM 2.18

Determine the x and y components of each of the forces shown.

SOLUTION

40-lb Force:	$F_x = +(40\text{ lb})\cos 60°$	$F_x = 20.0\text{ lb}$ ◀
	$F_y = -(40\text{ lb})\sin 60°$	$F_y = -34.6\text{ lb}$ ◀
50-lb Force:	$F_x = -(50\text{ lb})\sin 50°$	$F_x = -38.3\text{ lb}$ ◀
	$F_y = -(50\text{ lb})\cos 50°$	$F_y = -32.1\text{ lb}$ ◀
60-lb Force:	$F_x = +(60\text{ lb})\cos 25°$	$F_x = 54.4\text{ lb}$ ◀
	$F_y = +(60\text{ lb})\sin 25°$	$F_y = 25.4\text{ lb}$ ◀

Copyright © McGraw-Hill Education. All rights reserved. No reproduction or distribution without the prior written consent of McGraw-Hill Education.

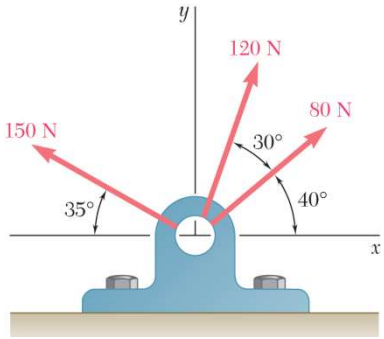

PROBLEM 2.19

Determine the x and y components of each of the forces shown.

SOLUTION

80-N Force:	$F_x = +(80\text{ N})\cos 40°$	$F_x = 61.3\text{ N}$ ◀
	$F_y = +(80\text{ N})\sin 40°$	$F_y = 51.4\text{ N}$ ◀
120-N Force:	$F_x = +(120\text{ N})\cos 70°$	$F_x = 41.0\text{ N}$ ◀
	$F_y = +(120\text{ N})\sin 70°$	$F_y = 112.8\text{ N}$ ◀
150-N Force:	$F_x = -(150\text{ N})\cos 35°$	$F_x = -122.9\text{ N}$ ◀
	$F_y = +(150\text{ N})\sin 35°$	$F_y = 86.0\text{ N}$ ◀

Copyright © McGraw-Hill Education. All rights reserved. No reproduction or distribution without the prior written consent of McGraw-Hill Education.

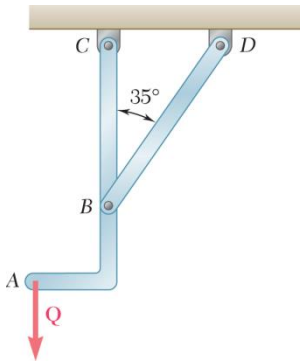

PROBLEM 2.20

Member *BD* exerts on member *ABC* a force **P** directed along line *BD*. Knowing that **P** must have a 300-lb horizontal component, determine (*a*) the magnitude of the force **P**, (*b*) its vertical component.

SOLUTION

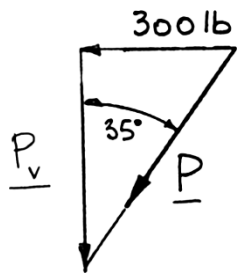

(*a*) $P\sin 35° = 300 \text{ lb}$

$$P = \frac{300 \text{ lb}}{\sin 35°} \qquad P = 523 \text{ lb} \blacktriangleleft$$

(*b*) Vertical component $P_v = P\cos 35°$

$$= (523 \text{ lb})\cos 35° \qquad P_v = 428 \text{ lb} \blacktriangleleft$$

Copyright © McGraw-Hill Education. All rights reserved. No reproduction or distribution without the prior written consent of McGraw-Hill Education.

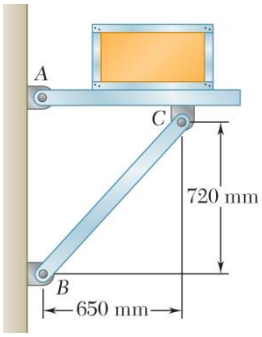

PROBLEM 2.21

Member BC exerts on member AC a force **P** directed along line BC. Knowing that **P** must have a 325-N horizontal component, determine (a) the magnitude of the force **P**, (b) its vertical component.

SOLUTION

$$BC = \sqrt{(650\text{ mm})^2 + (720\text{ mm})^2}$$
$$= 970\text{ mm}$$

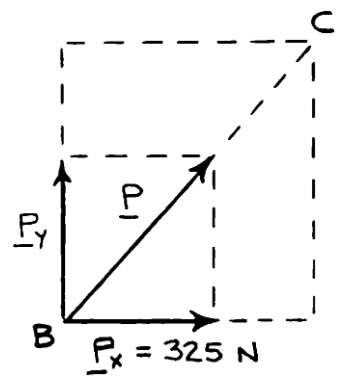

(a)
$$P_x = P\left(\frac{650}{970}\right)$$

or
$$P = P_x\left(\frac{970}{650}\right)$$
$$= 325\text{ N}\left(\frac{970}{650}\right)$$
$$= 485\text{ N}$$

$P = 485$ N ◀

(b)
$$P_y = P\left(\frac{720}{970}\right)$$
$$= 485\text{ N}\left(\frac{720}{970}\right)$$
$$= 360\text{ N}$$

$P_y = 970$ N ◀

Copyright © McGraw-Hill Education. All rights reserved. No reproduction or distribution without the prior written consent of McGraw-Hill Education.

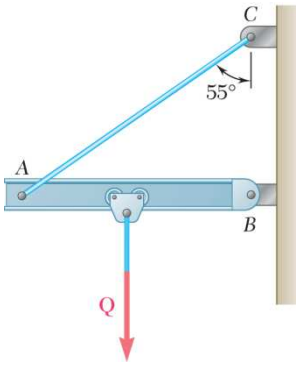

PROBLEM 2.22

Cable AC exerts on beam AB a force **P** directed along line AC. Knowing that **P** must have a 350-lb vertical component, determine (a) the magnitude of the force **P**, (b) its horizontal component.

SOLUTION

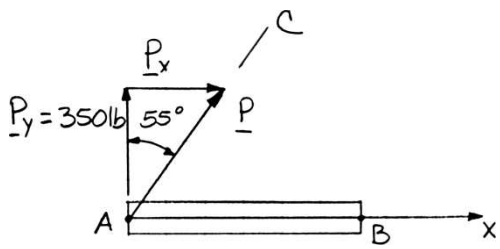

(a)
$$P = \frac{P_y}{\cos 55°}$$
$$= \frac{350 \text{ lb}}{\cos 55°}$$
$$= 610.21 \text{ lb}$$
$P = 610$ lb ◀

(b)
$$P_x = P \sin 55°$$
$$= (610.21 \text{ lb}) \sin 55°$$
$$= 499.85 \text{ lb}$$
$P_x = 500$ lb ◀

Copyright © McGraw-Hill Education. All rights reserved. No reproduction or distribution without the prior written consent of McGraw-Hill Education.

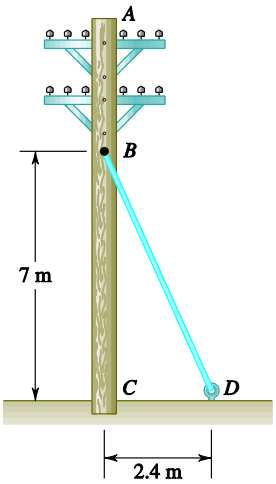

PROBLEM 2.23

The guy wire *BD* exerts on the telephone pole *AC* a force **P** directed along *BD*. Knowing that **P** must have a 720-N component perpendicular to the pole *AC*, determine (*a*) the magnitude of the force **P**, (*b*) its component along line *AC*.

SOLUTION

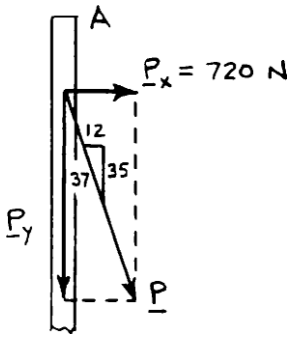

(*a*)

$$P = \frac{37}{12} P_x$$
$$= \frac{37}{12}(720 \text{ N})$$
$$= 2220 \text{ N}$$

$P = 2.22$ kN ◀

(*b*)

$$P_y = \frac{35}{12} P_x$$
$$= \frac{35}{12}(720 \text{ N})$$
$$= 2100 \text{ N}$$

$P_y = 2.10$ kN ◀

Copyright © McGraw-Hill Education. All rights reserved. No reproduction or distribution without the prior written consent of McGraw-Hill Education.

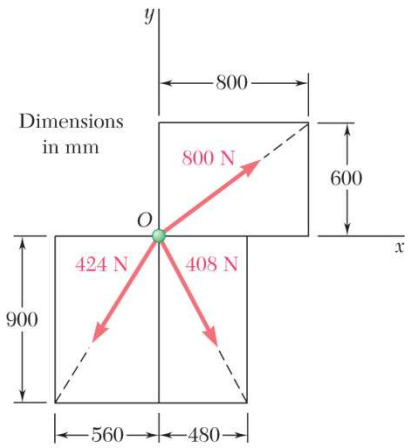

PROBLEM 2.24

Determine the resultant of the three forces of Problem 2.16.

PROBLEM 2.16 Determine the x and y components of each of the forces shown.

SOLUTION

Components of the forces were determined in Problem 2.16:

Force	x Comp. (N)	y Comp. (N)
800 lb	+640	+480
424 lb	–224	–360
408 lb	+192	–360
	$R_x = +608$	$R_y = -240$

$$\mathbf{R} = R_x\mathbf{i} + R_y\mathbf{j}$$
$$= (608 \text{ lb})\mathbf{i} + (-240 \text{ lb})\mathbf{j}$$

$$\tan\alpha = \frac{R_y}{R_x}$$
$$= \frac{240}{608}$$
$$\alpha = 21.541°$$
$$R = \frac{240 \text{ N}}{\sin(21.541°)}$$
$$= 653.65 \text{ N}$$

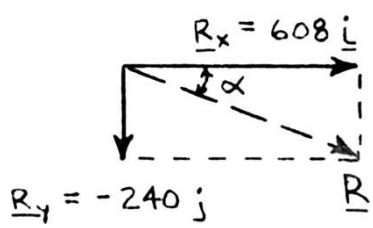

$\mathbf{R} = 654 \text{ N} \measuredangle 21.5°$ ◀

Copyright © McGraw-Hill Education. All rights reserved. No reproduction or distribution without the prior written consent of McGraw-Hill Education.

Statics and Mechanics of Materials 3rd edition Beer Solutions Manual

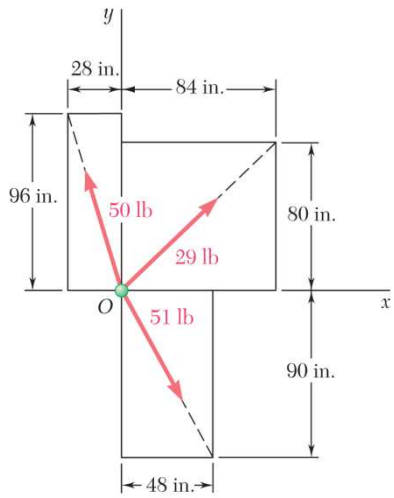

PROBLEM 2.25

Determine the resultant of the three forces of Problem 2.17.

PROBLEM 2.17 Determine the x and y components of each of the forces shown.

SOLUTION

Components of the forces were determined in Problem 2.17:

Force	x Comp. (lb)	y Comp. (lb)
29 lb	+21.0	+20.0
50 lb	–14.00	+48.0
51 lb	+24.0	–45.0
	$R_x = +31.0$	$R_y = +23.0$

$$\mathbf{R} = R_x\mathbf{i} + R_y\mathbf{j}$$

$$= (31.0 \text{ lb})\mathbf{i} + (23.0 \text{ lb})\mathbf{j}$$

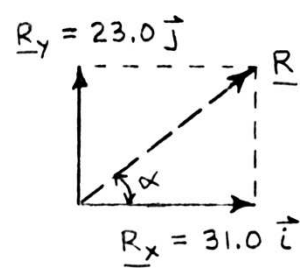

$$\tan\alpha = \frac{R_y}{R_x}$$

$$= \frac{23.0}{31.0}$$

$$\alpha = 36.573°$$

$$R = \frac{23.0 \text{ lb}}{\sin(36.573°)}$$

$$= 38.601 \text{ lb}$$

$\mathbf{R} = 38.6 \text{ lb} \measuredangle 36.6°$ ◀

Copyright © McGraw-Hill Education. All rights reserved. No reproduction or distribution without the prior written consent of McGraw-Hill Education.

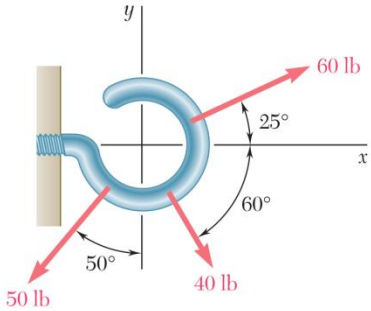

PROBLEM 2.26

Determine the resultant of the three forces of Problem 2.18.

PROBLEM 2.18 Determine the x and y components of each of the forces shown.

SOLUTION

Force	x Comp. (lb)	y Comp. (lb)
40 lb	+20.00	–34.64
50 lb	–38.30	–32.14
60 lb	+54.38	+25.36
	$R_x = +36.08$	$R_y = -41.42$

$$\mathbf{R} = R_x\mathbf{i} + R_y\mathbf{j}$$
$$= (+36.08 \text{ lb})\mathbf{i} + (-41.42 \text{ lb})\mathbf{j}$$
$$\tan\alpha = \frac{R_y}{R_x}$$
$$\tan\alpha = \frac{41.42 \text{ lb}}{36.08 \text{ lb}}$$
$$\tan\alpha = 1.14800$$
$$\alpha = 48.942°$$
$$R = \frac{41.42 \text{ lb}}{\sin 48.942°}$$

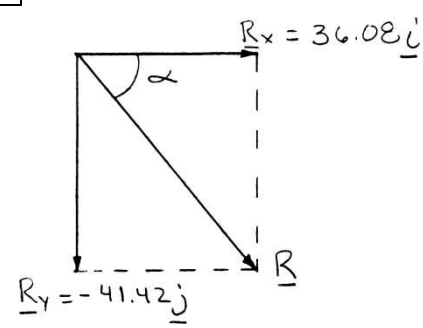

$\mathbf{R} = 54.9 \text{ lb} \measuredangle 48.9°$ ◀

Copyright © McGraw-Hill Education. All rights reserved. No reproduction or distribution without the prior written consent of McGraw-Hill Education.

Statics and Mechanics of Materials 3rd edition Beer Solutions Manual

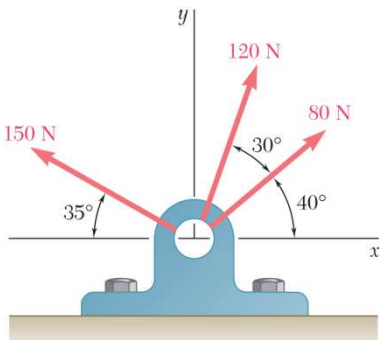

PROBLEM 2.27

Determine the resultant of the three forces of Problem 2.19.

PROBLEM 2.19 Determine the x and y components of each of the forces shown.

SOLUTION

Components of the forces were determined in Problem 2.19:

Force	x Comp. (N)	y Comp. (N)
80 N	+61.3	+51.4
120 N	+41.0	+112.8
150 N	–122.9	+86.0
	$R_x = -20.6$	$R_y = +250.2$

$$\mathbf{R} = R_x\mathbf{i} + R_y\mathbf{j}$$
$$= (-20.6\text{ N})\mathbf{i} + (250.2\text{ N})\mathbf{j}$$

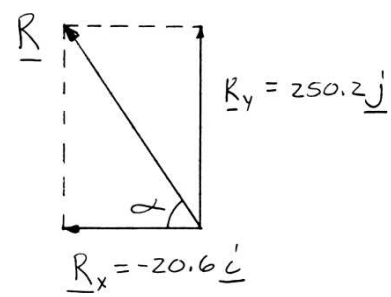

$$\tan\alpha = \frac{R_y}{R_x}$$
$$\tan\alpha = \frac{250.2\text{ N}}{20.6\text{ N}}$$
$$\tan\alpha = 12.1456$$
$$\alpha = 85.293°$$
$$R = \frac{250.2\text{ N}}{\sin 85.293°}$$

$\mathbf{R} = 251\text{ N} \measuredangle 85.3°$ ◀

Copyright © McGraw-Hill Education. All rights reserved. No reproduction or distribution without the prior written consent of McGraw-Hill Education.

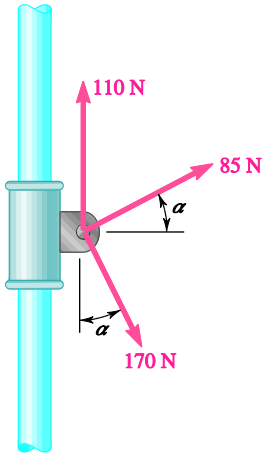

PROBLEM 2.28

A collar that can slide on a vertical rod is subjected to the three forces shown. Determine (*a*) the required value of α if the resultant of the three forces is to be horizontal, (*b*) the corresponding magnitude of the resultant.

SOLUTION

$$R_x = \Sigma F_x$$
$$= (85\text{ N})\cos\alpha + (170\text{ N})\sin(\alpha) \qquad (1)$$

$$R_y = \Sigma F_y$$
$$= +(110\text{ N}) + (85\text{ N})\sin(\alpha) - (170\text{ N})\cos\alpha \qquad (2)$$

(*a*) For **R** to be horizontal, we must have $R_y = 0$. We make $R_y = 0$ in Eq. (2):

$$110 + 85\sin\alpha - 170\cos\alpha = 0$$
$$22 + 17\sin\alpha - 34\cos\alpha = 0$$
$$17\sin\alpha + 22 = -34\sqrt{1-\sin^2\alpha}$$
$$289\sin^2\alpha + 748\sin\alpha + 484 = 1156\left(1-\sin^2\alpha\right)$$
$$1445\sin^2\alpha + 748\sin\alpha - 672 = 0$$

Solving by use of the quadratic formula:

$$\sin\alpha = 0.47059$$
$$\alpha = 28.072° \qquad \alpha = 28.1° \blacktriangleleft$$

(*b*) Since $R = R_x$ using Eq. (1):

$$R = 85\cos 28.072° + 170\sin 28.072°$$
$$= 155.0\text{ N}$$

$$R = 155.0\text{ N} \blacktriangleleft$$

Copyright © McGraw-Hill Education. All rights reserved. No reproduction or distribution without the prior written consent of McGraw-Hill Education.

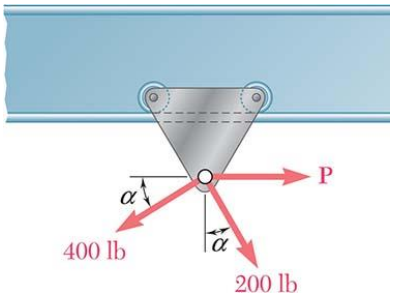

PROBLEM 2.29

A hoist trolley is subjected to the three forces shown. Knowing that $\alpha = 40°$, determine (*a*) the required magnitude of the force **P** if the resultant of the three forces is to be vertical, (*b*) the corresponding magnitude of the resultant.

SOLUTION

$$R_x = \overset{+}{\rightarrow} \Sigma F_x = P + (200 \text{ lb})\sin 40° - (400 \text{ lb})\cos 40°$$

$$R_x = P - 177.860 \text{ lb} \qquad (1)$$

$$R_y = +\downarrow \Sigma F_y = (200 \text{ lb})\cos 40° + (400 \text{ lb})\sin 40°$$

$$R_y = 410.32 \text{ lb} \qquad (2)$$

(*a*) For **R** to be vertical, we must have $R_x = 0$.

Set $R_x = 0$ in Eq. (1)

$$0 = P - 177.860 \text{ lb}$$

$$P = 177.860 \text{ lb} \qquad P = 177.9 \text{ lb} \blacktriangleleft$$

(*b*) Since **R** is to be vertical:

$$R = R_y = 410 \text{ lb} \qquad R = 410 \text{ lb} \blacktriangleleft$$

Copyright © McGraw-Hill Education. All rights reserved. No reproduction or distribution without the prior written consent of McGraw-Hill Education.

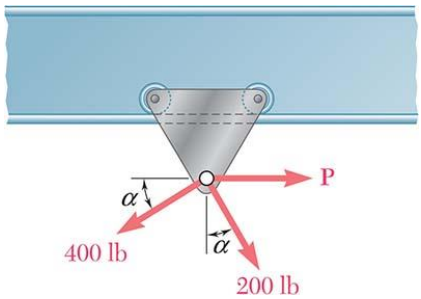

PROBLEM 2.30

A hoist trolley is subjected to the three forces shown. Knowing that P = 250 lb, determine (a) the required value of α if the resultant of the three forces is to be vertical, (b) the corresponding magnitude of the resultant.

SOLUTION

$$R_x = \overset{+}{\rightarrow} \Sigma F_x = 250 \text{ lb} + (200 \text{ lb})\sin\alpha - (400 \text{ lb})\cos\alpha$$

$$R_x = 250 \text{ lb} + (200 \text{ lb})\sin\alpha - (400 \text{ lb})\cos\alpha \qquad (1)$$

$$R_y = +\downarrow \Sigma F_y = (200 \text{ lb})\cos\alpha + (400 \text{ lb})\sin\alpha$$

(a) For **R** to be vertical, we must have $R_x = 0$.

Set $R_x = 0$ in Eq. (1)

$$0 = 250 \text{ lb} + (200 \text{ lb})\sin\alpha - (400 \text{ lb})\cos\alpha$$

$$(400 \text{ lb})\cos\alpha = (200 \text{ lb})\sin\alpha + 250 \text{ lb}$$

$$2\cos\alpha = \sin\alpha + 1.25$$

$$4\cos^2\alpha = \sin^2\alpha + 2.5\sin\alpha + 1.5625$$

$$4(1 - \sin^2\alpha) = \sin^2\alpha + 2.5\sin\alpha + 1.5625$$

$$0 = 5\sin^2\alpha + 2.5\sin\alpha - 2.4375$$

Using the quadratic formula to solve for the roots gives

$$\sin\alpha = 0.49162$$

or $\alpha = 29.447°$ $\qquad \alpha = 29.4°$ ◀

(b) Since **R** is to be vertical:

$$R = R_y = (200 \text{ lb})\cos 29.447° + (400 \text{ lb})\sin 29.447° \qquad \mathbf{R} = 371 \text{ lb}$$ ◀

Copyright © McGraw-Hill Education. All rights reserved. No reproduction or distribution without the prior written consent of McGraw-Hill Education.

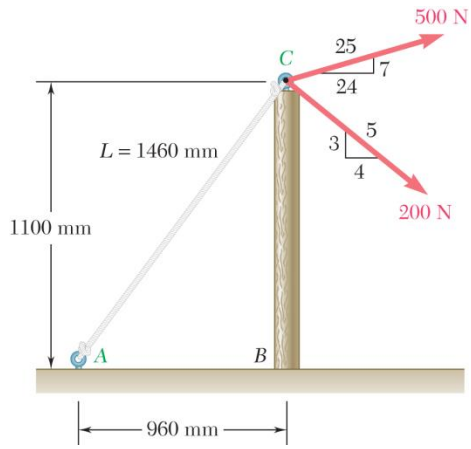

PROBLEM 2.31

For the post loaded as shown, determine (*a*) the required tension in rope *AC* if the resultant of the three forces exerted at point *C* is to be horizontal, (*b*) the corresponding magnitude of the resultant.

SOLUTION

$$R_x = \Sigma F_x = -\frac{960}{1460}T_{AC} + \frac{24}{25}(500\text{ N}) + \frac{4}{5}(200\text{ N})$$

$$R_x = -\frac{48}{73}T_{AC} + 640\text{ N} \qquad (1)$$

$$R_y = \Sigma F_y = -\frac{1100}{1460}T_{AC} + \frac{7}{25}(500\text{ N}) - \frac{3}{5}(200\text{ N})$$

$$R_y = -\frac{55}{73}T_{AC} + 20\text{ N} \qquad (2)$$

(*a*) For **R** to be horizontal, we must have $R_y = 0$.

Set $R_y = 0$ in Eq. (2): $\quad -\frac{55}{73}T_{AC} + 20\text{ N} = 0$

$$T_{AC} = 26.545\text{ N} \qquad T_{AC} = 26.5\text{ N} \blacktriangleleft$$

(*b*) Substituting for T_{AC} into Eq. (1) gives

$$R_x = -\frac{48}{73}(26.545\text{ N}) + 640\text{ N}$$

$$R_x = 622.55\text{ N}$$

$$R = R_x = 623\text{ N} \qquad R = 623\text{ N} \blacktriangleleft$$

Copyright © McGraw-Hill Education. All rights reserved. No reproduction or distribution without the prior written consent of McGraw-Hill Education.

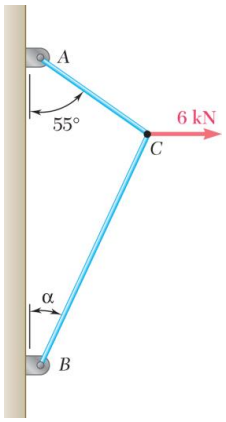

PROBLEM 2.32

Two cables are tied together at C and are loaded as shown. Knowing that α = 30°, determine the tension (a) in cable AC, (b) in cable BC.

SOLUTION

Free-Body Diagram **Force Triangle**

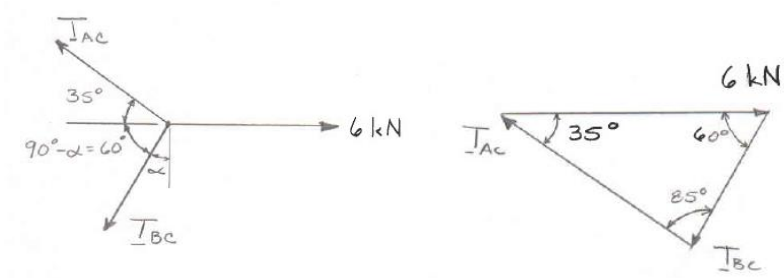

Law of sines:

$$\frac{T_{AC}}{\sin 60°} = \frac{T_{BC}}{\sin 35°} = \frac{6\text{ kN}}{\sin 85°}$$

(a) $$T_{AC} = \frac{6\text{ kN}}{\sin 85°}(\sin 60°)$$ $T_{AC} = 5.22\text{ kN}$ ◀

(b) $$T_{BC} = \frac{6\text{ kN}}{\sin 85°}(\sin 35°)$$ $T_{BC} = 3.45\text{ kN}$ ◀

Copyright © McGraw-Hill Education. All rights reserved. No reproduction or distribution without the prior written consent of McGraw-Hill Education.

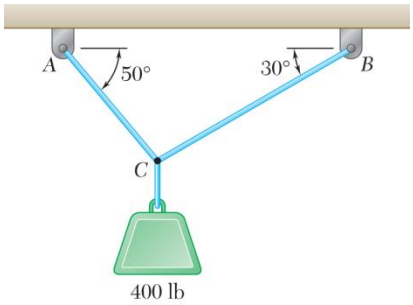

PROBLEM 2.33

Two cables are tied together at C and are loaded as shown. Determine the tension (a) in cable AC, (b) in cable BC.

SOLUTION

Free-Body Diagram

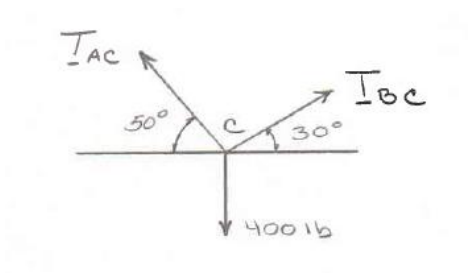

Force Triangle

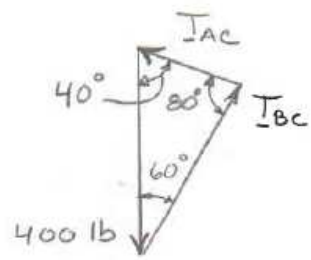

Law of sines:

$$\frac{T_{AC}}{\sin 60°} = \frac{T_{BC}}{\sin 40°} = \frac{400 \text{ lb}}{\sin 80°}$$

(a) $$T_{AC} = \frac{400 \text{ lb}}{\sin 80°}(\sin 60°)$$ $T_{AC} = 352 \text{ lb}$ ◀

(b) $$T_{BC} = \frac{400 \text{ lb}}{\sin 80°}(\sin 40°)$$ $T_{BC} = 261 \text{ lb}$ ◀

Copyright © McGraw-Hill Education. All rights reserved. No reproduction or distribution without the prior written consent of McGraw-Hill Education.

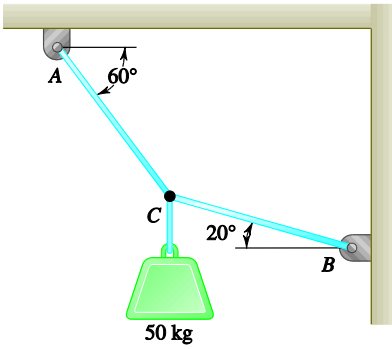

PROBLEM 2.34

Two cables are tied together at C and are loaded as shown. Determine the tension (a) in cable AC, (b) in cable BC.

SOLUTION

Free-Body Diagram

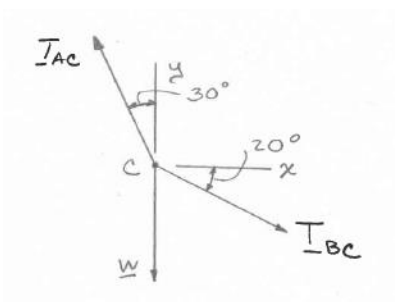

Force Triangle

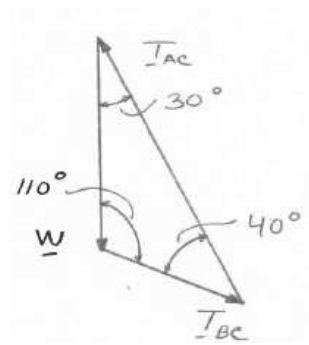

$$W = mg = (50\text{ kg})(9.81\text{ m/s}^2) = 490\text{ N}$$

Law of sines: $$\frac{T_{AC}}{\sin 110°} = \frac{T_{BC}}{\sin 30°} = \frac{490\text{ N}}{\sin 40°}$$

(a) $$T_{AC} = \frac{490\text{ N}}{\sin 40°}\sin 110°$$ $T_{AC} = 716\text{ N}$ ◀

(b) $$T_{BC} = \frac{490\text{ N}}{\sin 40°}\sin 30°$$ $T_{BC} = 381\text{ N}$ ◀

Copyright © McGraw-Hill Education. All rights reserved. No reproduction or distribution without the prior written consent of McGraw-Hill Education.

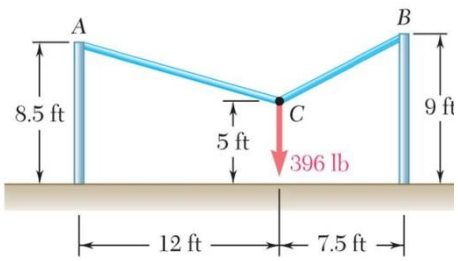

PROBLEM 2.35

Two cables are tied together at C and loaded as shown. Determine the tension (a) in cable AC, (b) in cable BC.

SOLUTION

Free Body Diagram at C:

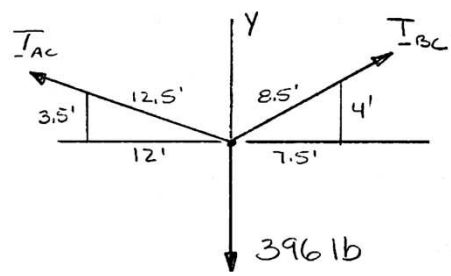

$$\Sigma \mathbf{F}_x = 0: \quad -\frac{12\text{ ft}}{12.5\text{ ft}}T_{AC} + \frac{7.5\text{ ft}}{8.5\text{ ft}}T_{BC} = 0$$

$$T_{BC} = 1.08800T_{AC}$$

$$\Sigma \mathbf{F}_y = 0: \quad \frac{3.5\text{ ft}}{12\text{ ft}}T_{AC} + \frac{4\text{ ft}}{8.5\text{ ft}}T_{BC} - 396\text{ lb} = 0$$

(a) $$\frac{3.5\text{ ft}}{12.5\text{ ft}}T_{AC} + \frac{4\text{ ft}}{8.5\text{ ft}}(1.08800T_{AC}) - 396\text{ lb} = 0$$

$$(0.28000 + 0.51200)T_{AC} = 396\text{ lb}$$

$$T_{AC} = 500.0\text{ lb} \qquad T_{AC} = 500\text{ lb} \blacktriangleleft$$

(b) $$T_{BC} = (1.08800)(500.0\text{ lb}) \qquad T_{BC} = 544\text{ lb} \blacktriangleleft$$

Copyright © McGraw-Hill Education. All rights reserved. No reproduction or distribution without the prior written consent of McGraw-Hill Education.

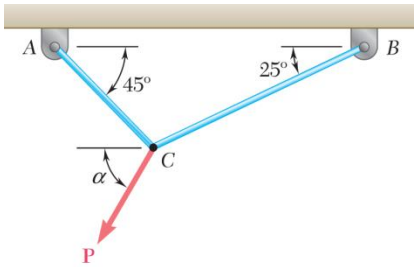

PROBLEM 2.36

Two cables are tied together at C and are loaded as shown. Knowing that $\mathbf{P}$ = 500 N and α = 60°, determine the tension in (*a*) in cable AC, (*b*) in cable BC.

SOLUTION

Free-Body Diagram

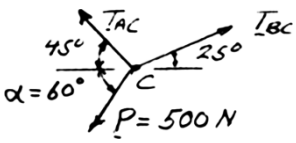

Force Triangle

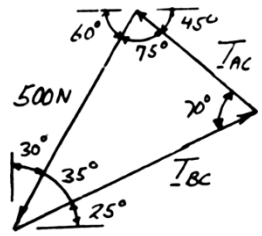

Law of sines: $$\frac{T_{AC}}{\sin 35°} = \frac{T_{BC}}{\sin 75°} = \frac{500\text{ N}}{\sin 70°}$$

(*a*) $$T_{AC} = \frac{500\text{ N}}{\sin 70°}\sin 35°$$ $T_{AC} = 305\text{ N}$ ◀

(*b*) $$T_{BC} = \frac{500\text{ N}}{\sin 70°}\sin 75°$$ $T_{BC} = 514\text{ N}$ ◀

Copyright © McGraw-Hill Education. All rights reserved. No reproduction or distribution without the prior written consent of McGraw-Hill Education.

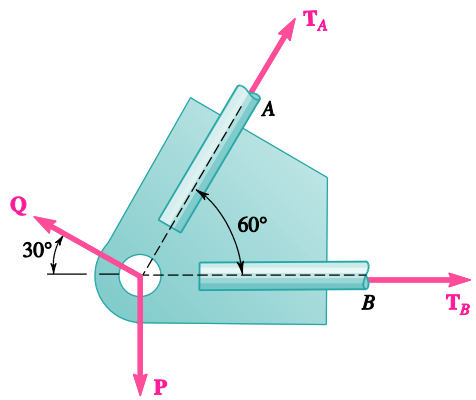

PROBLEM 2.37

Two forces **P** and **Q** are applied as shown to a bracket in a spacecraft frame. Knowing that the connection is in equilibrium and that the tensions in rods A and B are T_A = 240 lb and T_B = 500 lb, determine the magnitudes of **P** and **Q**.

SOLUTION

Free-Body Diagram

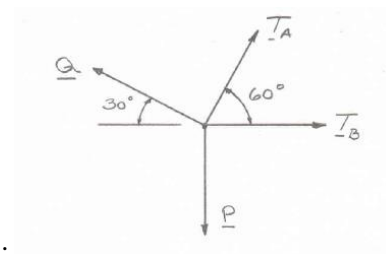

Resolving the forces into x- and y-directions:

$$\mathbf{R} = \mathbf{P} + \mathbf{Q} + \mathbf{T}_A + \mathbf{T}_B = 0$$

Substituting components:

$$\begin{aligned}\mathbf{R} &= -P\mathbf{j} - Q\cos 30°\mathbf{i} + Q\sin 30°\mathbf{j} \\ &\quad + [(240\text{ lb})\cos 60°]\mathbf{i} \\ &\quad + [(240\text{ lb})\sin 60°]\mathbf{j} + (500\text{ lb})\mathbf{i}\end{aligned}$$

Summing forces in the x-direction:

$$-Q\cos 30° + (240\text{ lb})\cos 60° + 500\text{ lb} = 0$$

$$Q = 715.91\text{ lb}$$

Summing forces in the y-direction:

$$-P + Q\sin 30° + (240\text{ lb})\sin 60° = 0$$

$$\begin{aligned}P &= Q\sin 30° + (240\text{ lb})\sin 60° \\ &= (715.91\text{ lb})\sin 30° + (240\text{ lb})\sin 60° \\ &= 565.80\text{ lb}\end{aligned}$$

$P = 566$ lb; $Q = 716$ lb ◀

Copyright © McGraw-Hill Education. All rights reserved. No reproduction or distribution without the prior written consent of McGraw-Hill Education.

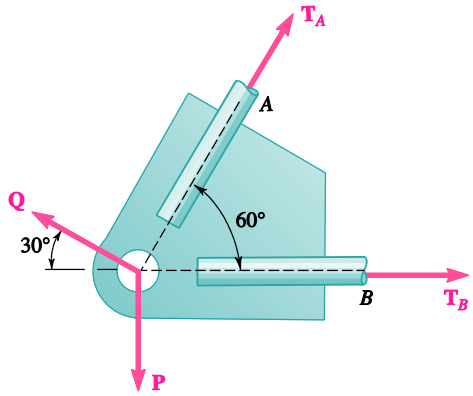

PROBLEM 2.38

Two forces **P** and **Q** are applied as shown to a bracket in a spacecraft frame. Knowing that the connection is in equilibrium and that P = 600 lb and Q = 800 lb, determine the tension in rods A and B.

SOLUTION

Free-Body Diagram

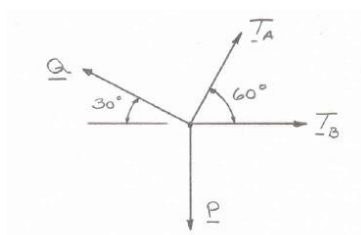

Resolving the forces into x- and y-directions:

$$\mathbf{R} = \mathbf{P} + \mathbf{Q} + \mathbf{T}_A + \mathbf{T}_B = 0$$

Substituting components:

$$\begin{aligned}\mathbf{R} = &-(600\text{ lb})\mathbf{j} - [(800\text{ lb})\cos 30°]\mathbf{i} \\ &+ [(800\text{ lb})\sin 30°]\mathbf{j} \\ &+ T_B\mathbf{i} + (T_A\cos 60°)\mathbf{i} + (T_A\sin 60°)\mathbf{j} = 0\end{aligned}$$

Summing forces in the y-direction:

$$-600\text{ lb} + (800\text{ lb})\sin 30° + T_A\sin 60° = 0$$

$$T_A = 230.94\text{ lb} \qquad T_A = 231\text{ lb} \blacktriangleleft$$

Summing forces in the x-direction:

$$-(800\text{ lb})\cos 30° + T_B + T_A\cos 60° = 0$$

Thus,

$$T_B = -(230.94\text{ lb})\cos 60° + (800\text{ lb})\cos 30°$$

$$= 577.35\text{ lb} \qquad T_B = 577\text{ lb} \blacktriangleleft$$

Copyright © McGraw-Hill Education. All rights reserved. No reproduction or distribution without the prior written consent of McGraw-Hill Education.

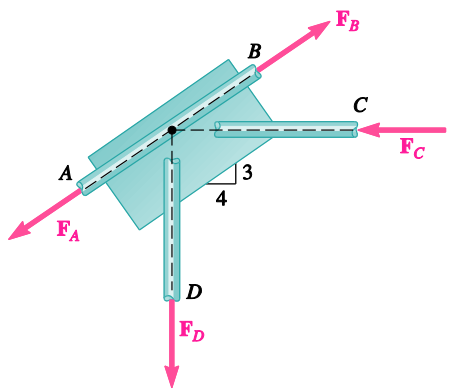

PROBLEM 2.39

A welded connection is in equilibrium under the action of the four forces shown. Knowing that $F_A = 8$ kN and $F_B = 16$ kN, determine the magnitudes of the other two forces.

SOLUTION

Free-Body Diagram of Connection

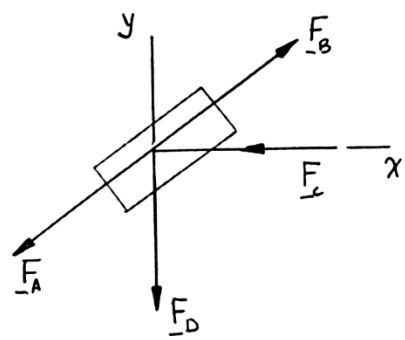

$$\Sigma F_x = 0: \quad \frac{3}{5}F_B - F_C - \frac{3}{5}F_A = 0$$

With $F_A = 8$ kN

$F_B = 16$ kN

$$F_C = \frac{4}{5}(16\text{ kN}) - \frac{4}{5}(8\text{ kN}) \qquad F_C = 6.40\text{ kN} \blacktriangleleft$$

$$\Sigma F_y = 0: \quad -F_D + \frac{3}{5}F_B - \frac{3}{5}F_A = 0$$

With F_A and F_B as above:

$$F_D = \frac{3}{5}(16\text{ kN}) - \frac{3}{5}(8\text{ kN}) \qquad F_D = 4.80\text{ kN} \blacktriangleleft$$

Copyright © McGraw-Hill Education. All rights reserved. No reproduction or distribution without the prior written consent of McGraw-Hill Education.

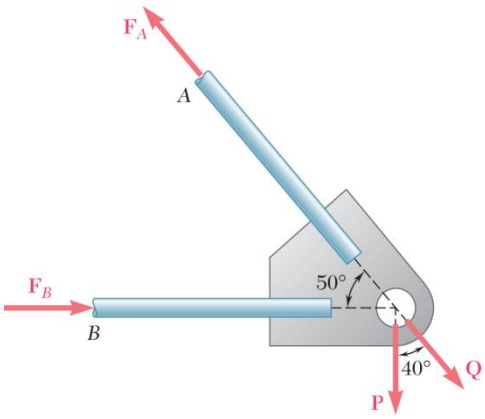

PROBLEM 2.40

Two forces **P** and **Q** are applied as shown to an aircraft connection. Knowing that the connection is in equilibrium and that $P = 500\text{ lb}$ and $Q = 650\text{ lb}$, determine the magnitudes of the forces exerted on the rods A and B.

SOLUTION

Free-Body Diagram

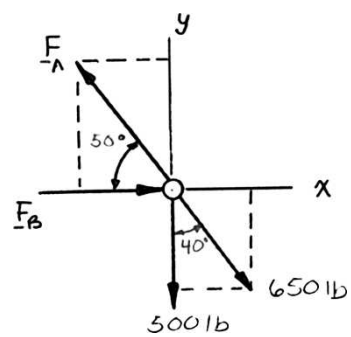

Resolving the forces into x- and y-directions:

$$\mathbf{R} = \mathbf{P} + \mathbf{Q} + \mathbf{F}_A + \mathbf{F}_B = 0$$

Substituting components:

$$\begin{aligned}\mathbf{R} &= -(500\text{ lb})\mathbf{j} + [(650\text{ lb})\cos 50°]\mathbf{i} \\ &\quad - [(650\text{ lb})\sin 50°]\mathbf{j} \\ &\quad + F_B\mathbf{i} - (F_A\cos 50°)\mathbf{i} + (F_A\sin 50°)\mathbf{j} = 0\end{aligned}$$

In the y-direction (one unknown force):

$$-500\text{ lb} - (650\text{ lb})\sin 50° + F_A\sin 50° = 0$$

Thus,

$$F_A = \frac{500\text{ lb} + (650\text{ lb})\sin 50°}{\sin 50°}$$

$$= 1302.70\text{ lb}$$

$F_A = 1303\text{ lb}$ ◀

In the x-direction:

$$(650\text{ lb})\cos 50° + F_B - F_A\cos 50° = 0$$

Thus,

$$\begin{aligned}F_B &= F_A\cos 50° - (650\text{ lb})\cos 50° \\ &= (1302.70\text{ lb})\cos 50° - (650\text{ lb})\cos 50° \\ &= 419.55\text{ lb}\end{aligned}$$

$F_B = 420\text{ lb}$ ◀

Copyright © McGraw-Hill Education. All rights reserved. No reproduction or distribution without the prior written consent of McGraw-Hill Education.

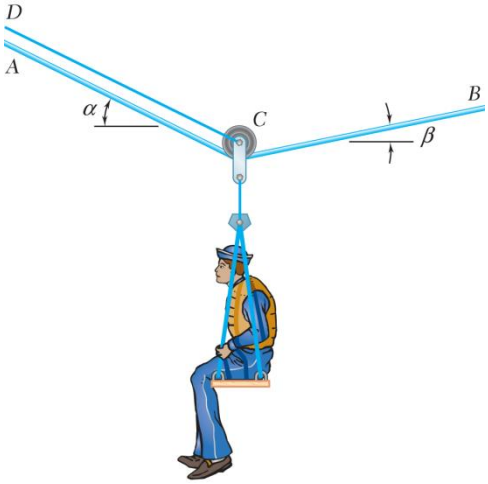

PROBLEM 2.41

A sailor is being rescued using a boatswain's chair that is suspended from a pulley that can roll freely on the support cable *ACB* and is pulled at a constant speed by cable *CD*. Knowing that $\alpha = 30°$ and $\beta = 10°$ and that the combined weight of the boatswain's chair and the sailor is 200 lb, determine the tension (*a*) in the support cable *ACB*, (*b*) in the traction cable *CD*.

SOLUTION

Free-Body Diagram

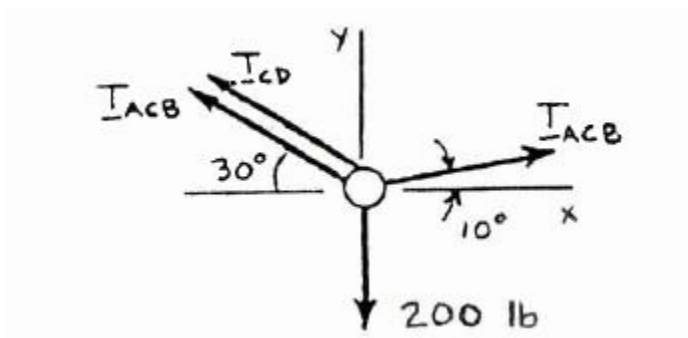

$$\xrightarrow{+} \Sigma F_x = 0: \quad T_{ACB}\cos 10° - T_{ACB}\cos 30° - T_{CD}\cos 30° = 0$$

$$T_{CD} = 0.137158 T_{ACB} \qquad (1)$$

$$+\uparrow \Sigma F_y = 0: \quad T_{ACB}\sin 10° + T_{ACB}\sin 30° + T_{CD}\sin 30° - 200 = 0$$

$$0.67365 T_{ACB} + 0.5 T_{CD} = 200 \qquad (2)$$

(*a*) Substitute (1) into (2): $0.67365 T_{ACB} + 0.5(0.137158 T_{ACB}) = 200$

$T_{ACB} = 269.46$ lb $\qquad T_{ACB} = 269$ lb ◀

(*b*) From (1): $T_{CD} = 0.137158(269.46 \text{ lb})$ $\qquad T_{CD} = 37.0$ lb ◀

Copyright © McGraw-Hill Education. All rights reserved. No reproduction or distribution without the prior written consent of McGraw-Hill Education.

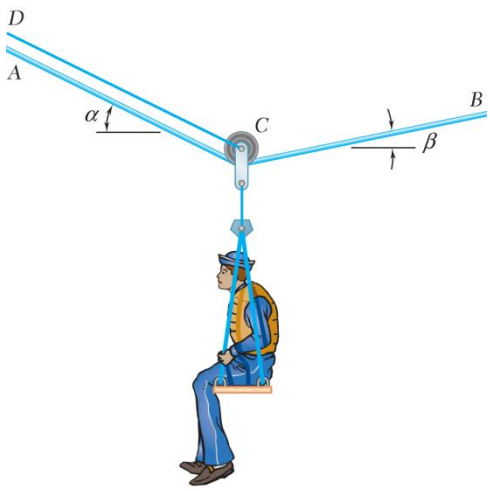

PROBLEM 2.42

A sailor is being rescued using a boatswain's chair that is suspended from a pulley that can roll freely on the support cable *ACB* and is pulled at a constant speed by cable *CD*. Knowing that $\alpha = 25°$ and $\beta = 15°$ and that the tension in cable *CD* is 20 lb, determine (*a*) the combined weight of the boatswain's chair and the sailor, (*b*) the tension in the support cable *ACB*.

SOLUTION

Free-Body Diagram

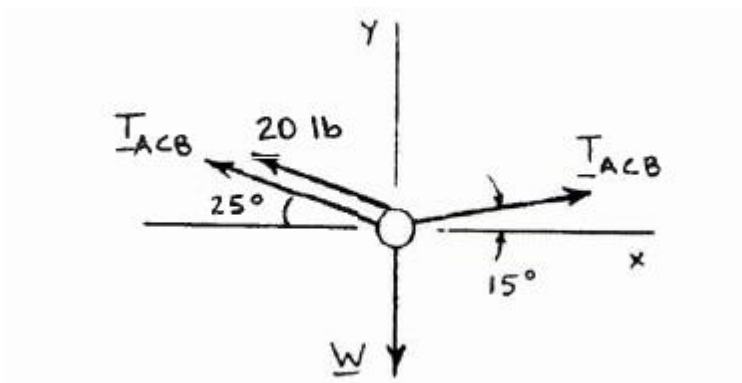

$$\xrightarrow{+} \Sigma F_x = 0: \quad T_{ACB}\cos 15° - T_{ACB}\cos 25° - (20\text{ lb})\cos 25° = 0$$

$$T_{ACB} = 304.04\text{ lb}$$

$$+\uparrow \Sigma F_y = 0: \quad (304.04\text{ lb})\sin 15° + (304.04\text{ lb})\sin 25°$$

$$+(20\text{ lb})\sin 25° - W = 0$$

$$W = 215.64\text{ lb}$$

(*a*) $W = 216\text{ lb}$ ◀

(*b*) $T_{ACB} = 304\text{ lb}$ ◀

Copyright © McGraw-Hill Education. All rights reserved. No reproduction or distribution without the prior written consent of McGraw-Hill Education.

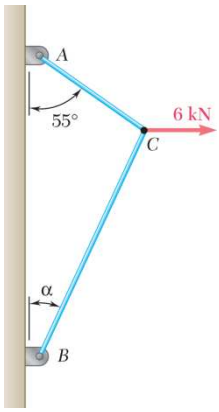

PROBLEM 2.43

For the cables of prob. 2.32, find the value of α for which the tension is as small as possible (*a*) in cable *bc*, (*b*) in both cables simultaneously. In each case determine the tension in each cable.

SOLUTION

Free-Body Diagram **Force Triangle**

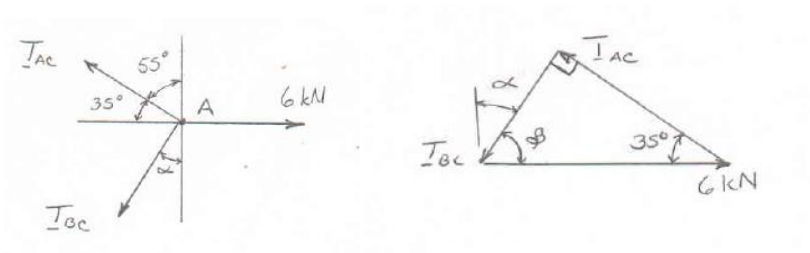

(*a*) For a minimum tension in cable *BC,* set angle between cables to 90 degrees.

By inspection, $\alpha = 35.0^\circ$ ◀

$$T_{AC} = (6\text{ kN})\cos 35^\circ \qquad T_{AC} = 4.91\text{ kN} \blacktriangleleft$$

$$T_{BC} = (6\text{ kN})\sin 35^\circ \qquad T_{BC} = 3.44\text{ kN} \blacktriangleleft$$

(*b*) For equal tension in both cables, the force triangle will be an isosceles.

Therefore, by inspection, $\alpha = 55.0^\circ$ ◀

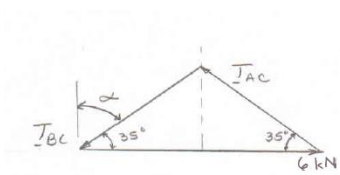

$$T_{AC} = T_{BC} = (1/2)\frac{6\text{ kN}}{\cos 35^\circ} \qquad T_{AC} = T_{BC} = 3.66\text{ kN} \blacktriangleleft$$

Copyright © McGraw-Hill Education. All rights reserved. No reproduction or distribution without the prior written consent of McGraw-Hill Education.

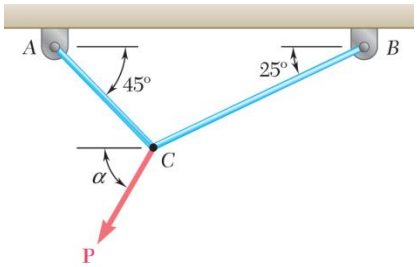

PROBLEM 2.44

For the cables of Problem 2.36, it is known that the maximum allowable tension is 600 N in cable *AC* and 750 N in cable *BC*. Determine (*a*) the maximum force **P** that can be applied at *C*, (*b*) the corresponding value of α.

SOLUTION

Free-Body Diagram

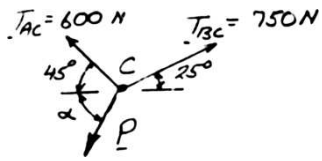

Force Triangle

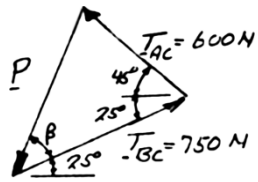

(*a*) Law of cosines $\quad P^2 = (600)^2 + (750)^2 - 2(600)(750)\cos(25° + 45°)$

$P = 784.02$ N $\qquad P = 784$ N ◀

(*b*) Law of sines $\quad \dfrac{\sin\beta}{600 \text{ N}} = \dfrac{\sin(25° + 45°)}{784.02 \text{ N}}$

$\beta = 46.0° \qquad \therefore \quad \alpha = 46.0° + 25° \qquad \alpha = 71.0°$ ◀

Copyright © McGraw-Hill Education. All rights reserved. No reproduction or distribution without the prior written consent of McGraw-Hill Education.

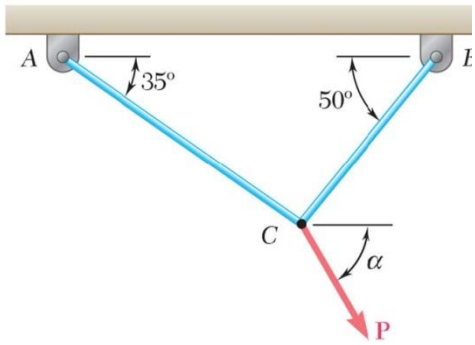

PROBLEM 2.45

Two cables tied together at C are loaded as shown. Knowing that the maximum allowable tension in each cable is 800 N, determine (a) the magnitude of the largest force **P** that can be applied at C, (b) the corresponding value of α.

SOLUTION

Free-Body Diagram: *C*

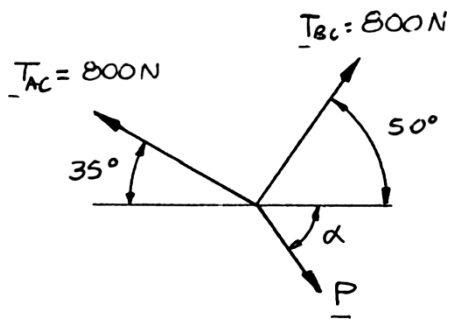

Force Triangle

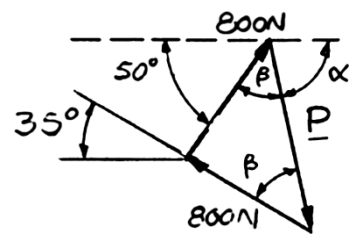

Force triangle is isosceles with

$$2\beta = 180° - 85°$$
$$\beta = 47.5°$$

(a) $$P = 2(800\text{ N})\cos 47.5° = 1081\text{ N}$$

Since $P > 0$, the solution is correct. $P = 1081\text{ N}$ ◀

(b) $$\alpha = 180° - 50° - 47.5° = 82.5°$$ $\alpha = 82.5°$ ◀

Copyright © McGraw-Hill Education. All rights reserved. No reproduction or distribution without the prior written consent of McGraw-Hill Education.

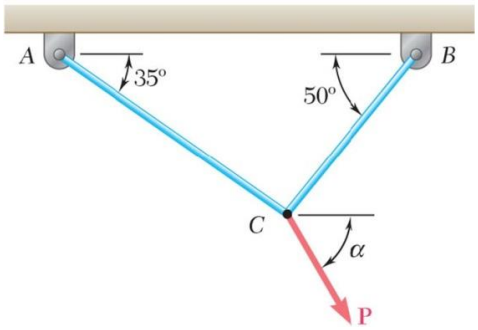

PROBLEM 2.46

Two cables tied together at C are loaded as shown. Knowing that the maximum allowable tension is 1200 N in cable AC and 600 N in cable BC, determine (a) the magnitude of the largest force **P** that can be applied at C, (b) the corresponding value of α.

SOLUTION

Free-Body Diagram

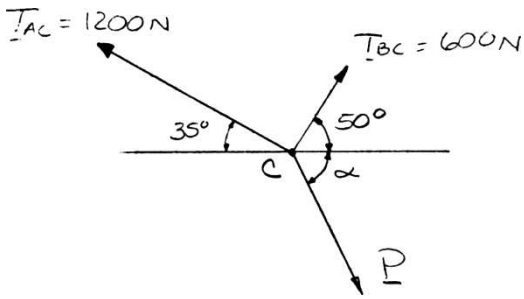

Force Triangle

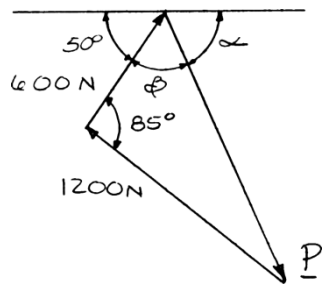

(a) Law of cosines:

$$P^2 = (1200\text{ N})^2 + (600\text{ N})^2 - 2(1200\text{ N})(600\text{ N})\cos 85°$$

$$P = 1294\text{ N}$$

Since P. 1200 N, the solution is correct.

$P = 1294\text{ N}$ ◀

(b) Law of sines:

$$\frac{\sin\beta}{1200\text{ N}} = \frac{\sin 85°}{1294\text{ N}}$$

$$\beta = 67.5°$$

$$\alpha = 180° - 50° - 67.5°$$

$\alpha = 62.5°$ ◀

Copyright © McGraw-Hill Education. All rights reserved. No reproduction or distribution without the prior written consent of McGraw-Hill Education.

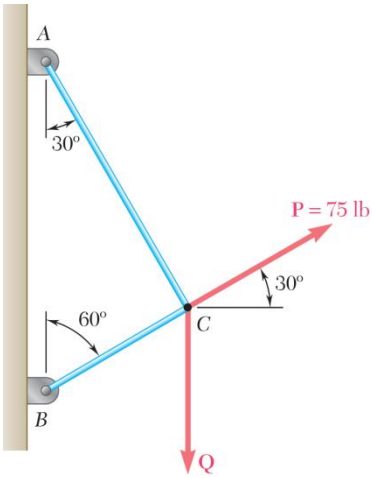

PROBLEM 2.47

Two cables tied together at C are loaded as shown. Determine the range of values of Q for which the tension will not exceed 60 lb in either cable.

SOLUTION

Free-Body Diagram

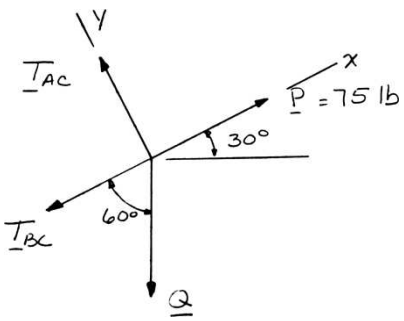

$$\Sigma F_x = 0: \quad -T_{BC} - Q\cos 60° + 75 \text{ lb} = 0$$

$$T_{BC} = 75 \text{ lb} - Q\cos 60° \qquad (1)$$

$$\Sigma F_y = 0: \quad T_{AC} - Q\sin 60° = 0$$

$$T_{AC} = Q\sin 60° \qquad (2)$$

Requirement: $T_{AC} = 60$ lb:

From Eq. (2): $Q\sin 60° = 60$ lb

$$Q = 69.3 \text{ lb}$$

Requirement: $T_{BC} = 60$ lb:

From Eq. (1): $75 \text{ lb} - Q\cos 60° = 60$ lb

$$Q = 30.0 \text{ lb} \quad 30.0 \text{ lb} \le Q \le 69.3 \text{ lb} \blacktriangleleft$$

Copyright © McGraw-Hill Education. All rights reserved. No reproduction or distribution without the prior written consent of McGraw-Hill Education.

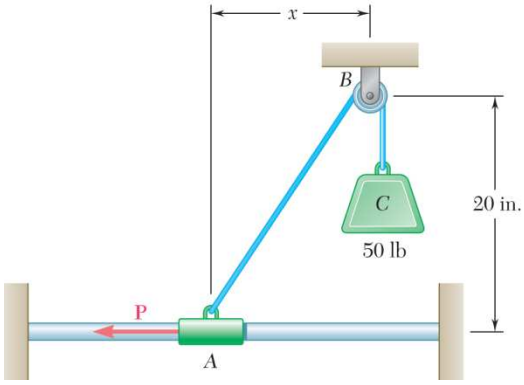

PROBLEM 2.48

Collar A is connected as shown to a 50-lb load and can slide on a frictionless horizontal rod. Determine the magnitude of the force **P** required to maintain the equilibrium of the collar when (*a*) $x = 4.5$ in., (*b*) $x = 15$ in.

SOLUTION

(*a*) **Free Body: Collar *A***

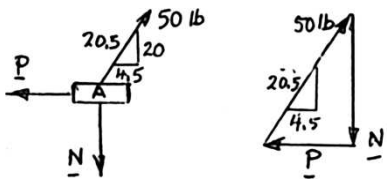

Force Triangle

$$\frac{P}{4.5} = \frac{50 \text{ lb}}{20.5}$$

$P = 10.98$ lb ◀

(*b*) **Free Body: Collar *A***

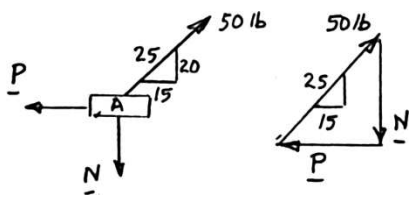

Force Triangle

$$\frac{P}{15} = \frac{50 \text{ lb}}{25}$$

$P = 30.0$ lb ◀

Copyright © McGraw-Hill Education. All rights reserved. No reproduction or distribution without the prior written consent of McGraw-Hill Education.

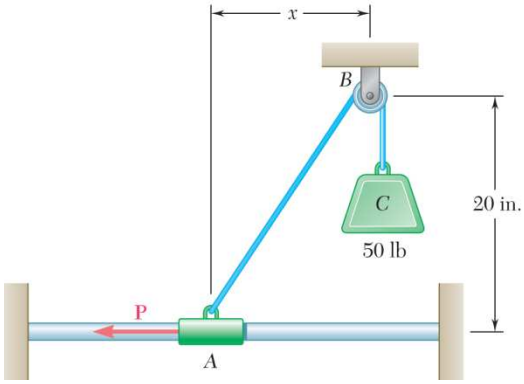

PROBLEM 2.49

Collar A is connected as shown to a 50-lb load and can slide on a frictionless horizontal rod. Determine the distance x for which the collar is in equilibrium when $P = 48$ lb.

SOLUTION

Free Body: Collar *A*

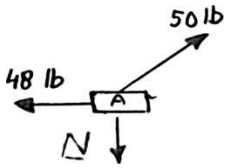

Force Triangle

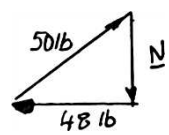

$$N^2 = (50)^2 - (48)^2 = 196$$

$$N = 14.00 \text{ lb}$$

Similar Triangles

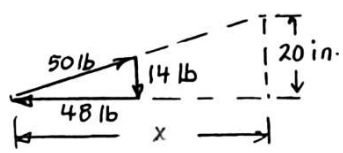

$$\frac{x}{20 \text{ in.}} = \frac{48 \text{ lb}}{14 \text{ lb}}$$

$x = 68.6$ in. ◀

Copyright © McGraw-Hill Education. All rights reserved. No reproduction or distribution without the prior written consent of McGraw-Hill Education.

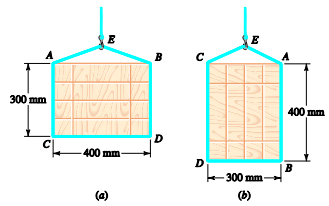

PROBLEM 2.50

A cable loop of length 1.5 m is placed around a crate. Knowing that the mass of the crate is 300 kg, determine the tension in the cable for each of the arrangements shown.

SOLUTION

Free-Body Diagram **Isosceles Force Triangle**

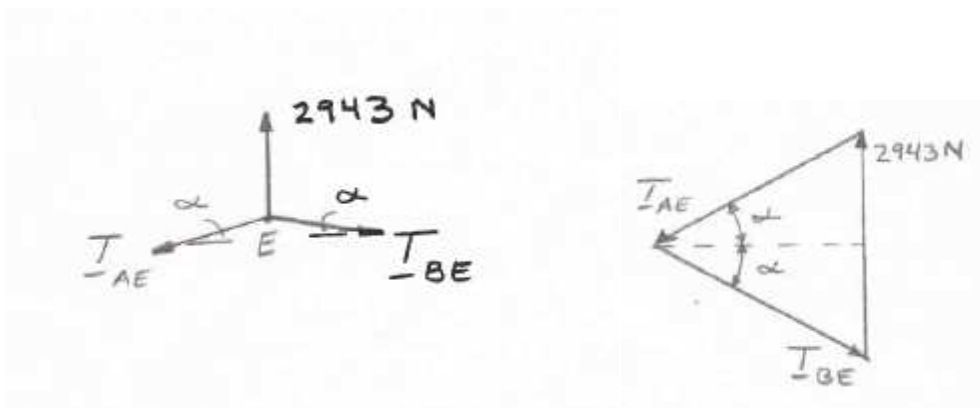

$$W = (300\text{ kg})(9.81\text{ m/s}^2) = 2943.0\text{ N}$$

$$EB = \frac{1}{2}(1500\text{ mm} - 400\text{ mm} - 300\text{ mm} - 300\text{ mm})$$

$$EB = 250\text{ mm}$$

$$\alpha = \cos^{-1}\left(\frac{200\text{ mm}}{250\text{ mm}}\right) = 36.87°$$

$$T_{AE} = T_{BE}$$

$$T_{AE}\sin\alpha = \frac{1}{2}(2943.0\text{ N})$$

$$T_{AE}\sin 36.87° = \frac{1}{2}(2943.0\text{ N})$$

$$T_{AE} = 2452.5\text{ N}$$

(*a*) $T_{AE} = 2450\text{ N}$ ◀

Copyright © McGraw-Hill Education. All rights reserved. No reproduction or distribution without the prior written consent of McGraw-Hill Education.

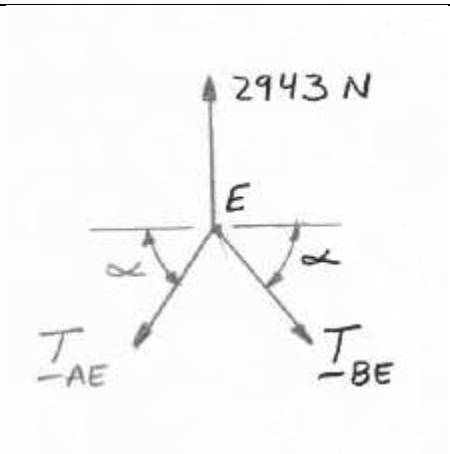

Free-Body Diagram

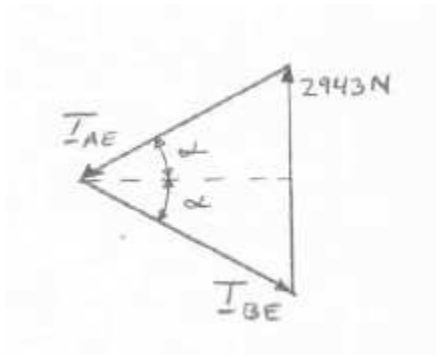

Isosceles Force Triangle

$$EB = \frac{1}{2}(1500 \text{ mm} - 300 \text{ mm} - 400 \text{ mm} - 400 \text{ mm})$$

$$EB = 250 \text{ mm}$$

$$\alpha = \cos^{-1}\left(\frac{150 \text{ mm}}{200 \text{ mm}}\right) = 41.41°$$

$$T_{AE} = T_{BE}$$

$$T_{AE} \sin\alpha = \frac{1}{2}(2943.0 \text{ N})$$

$$T_{AE} \sin 41.41° = \frac{1}{2}(2943.0 \text{ N})$$

$$T_{AE} = 2224.7 \text{ N}$$

(*b*) $T_{AE} = 2220 \text{ N}$ ◀

Copyright © McGraw-Hill Education. All rights reserved. No reproduction or distribution without the prior written consent of McGraw-Hill Education.

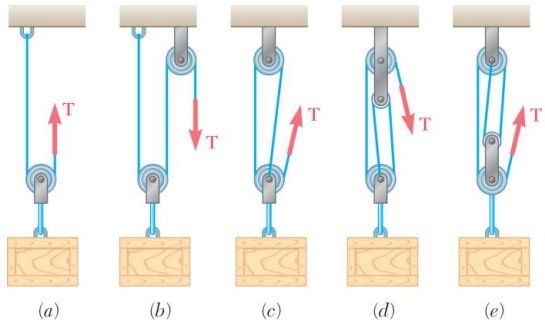

PROBLEM 2.51

A 600-lb crate is supported by several rope-and-pulley arrangements as shown. Determine for each arrangement the tension in the rope. (*Hint:* The tension in the rope is the same on each side of a simple pulley. This can be proved by the methods of Ch. 4.)

SOLUTION

Free-Body Diagram of Pulley

(*a*)

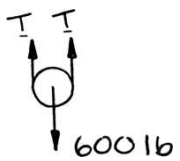

$$+\uparrow \Sigma F_y = 0: \quad 2T - (600 \text{ lb}) = 0$$

$$T = \frac{1}{2}(600 \text{ lb})$$

$$T = 300 \text{ lb} \blacktriangleleft$$

(*b*)

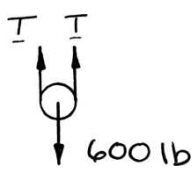

$$+\uparrow \Sigma F_y = 0: \quad 2T - (600 \text{ lb}) = 0$$

$$T = \frac{1}{2}(600 \text{ lb})$$

$$T = 300 \text{ lb} \blacktriangleleft$$

(*c*)

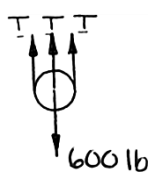

$$+\uparrow \Sigma F_y = 0: \quad 3T - (600 \text{ lb}) = 0$$

$$T = \frac{1}{3}(600 \text{ lb})$$

$$T = 200 \text{ lb} \blacktriangleleft$$

(*d*)

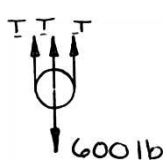

$$+\uparrow \Sigma F_y = 0: \quad 3T - (600 \text{ lb}) = 0$$

$$T = \frac{1}{3}(600 \text{ lb})$$

$$T = 200 \text{ lb} \blacktriangleleft$$

(*e*)

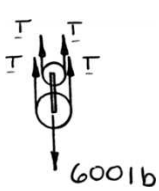

$$+\uparrow \Sigma F_y = 0: \quad 4T - (600 \text{ lb}) = 0$$

$$T = \frac{1}{4}(600 \text{ lb})$$

$$T = 150.0 \text{ lb} \blacktriangleleft$$

Copyright © McGraw-Hill Education. All rights reserved. No reproduction or distribution without the prior written consent of McGraw-Hill Education.

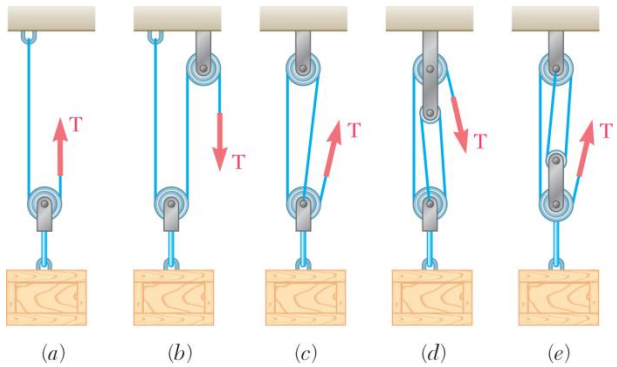

PROBLEM 2.52

Solve Parts *b* and *d* of Problem 2.51, assuming that the free end of the rope is attached to the crate.

PROBLEM 2.51 A 600-lb crate is supported by several rope-and-pulley arrangements as shown. Determine for each arrangement the tension in the rope. . (*Hint:* The tension in the rope is the same on each side of a simple pulley. This can be proved by the methods of Ch. 4.)

SOLUTION

Free-Body Diagram of Pulley and Crate

(*b*)

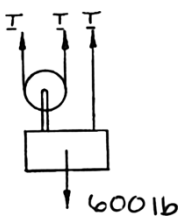

$$+\uparrow \Sigma F_y = 0: \quad 3T - (600 \text{ lb}) = 0$$

$$T = \frac{1}{3}(600 \text{ lb})$$

$$T = 200 \text{ lb} \blacktriangleleft$$

(*d*)

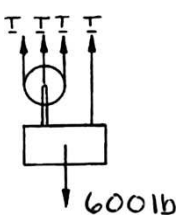

$$+\uparrow \Sigma F_y = 0: \quad 4T - (600 \text{ lb}) = 0$$

$$T = \frac{1}{4}(600 \text{ lb})$$

$$T = 150.0 \text{ lb} \blacktriangleleft$$

Copyright © McGraw-Hill Education. All rights reserved. No reproduction or distribution without the prior written consent of McGraw-Hill Education.

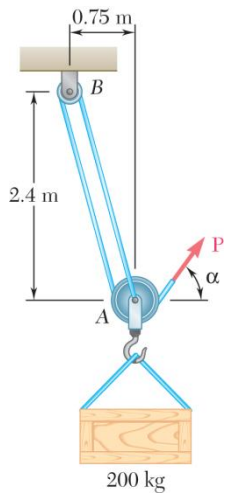

PROBLEM 2.53

A 200-kg crate is to be supported by the rope-and-pulley arrangement shown. Determine the magnitude and direction of the force **P** that must be exerted on the free end of the rope to maintain equilibrium. (See the hint for Prob. 2.51.)

SOLUTION

Free-Body Diagram: Pulley *A*

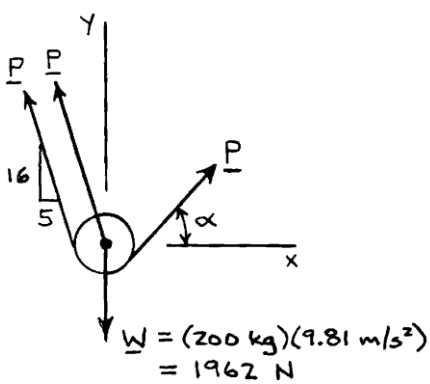

$$\xrightarrow{+} \Sigma F_x = 0: \quad -2P\left(\frac{5}{\sqrt{281}}\right) + P\cos\alpha = 0$$

$$\cos\alpha = 0.59655$$

$$\alpha = \pm 53.377°$$

For $\alpha = +53.377°$:

$$+\uparrow \Sigma F_y = 0: \quad 2P\left(\frac{16}{\sqrt{281}}\right) + P\sin 53.377° - 1962\text{ N} = 0$$

$$\mathbf{P} = 724\text{ N} \measuredangle 53.4° \blacktriangleleft$$

For $\alpha = -53.377°$:

$$+\uparrow \Sigma F_y = 0: \quad 2P\left(\frac{16}{\sqrt{281}}\right) + P\sin(-53.377°) - 1962\text{ N} = 0$$

$$\mathbf{P} = 1773 \measuredangle 53.4° \blacktriangleleft$$

Copyright © McGraw-Hill Education. All rights reserved. No reproduction or distribution without the prior written consent of McGraw-Hill Education.

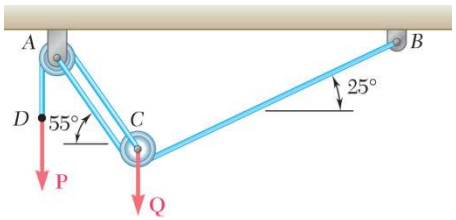

PROBLEM 2.54

A load **Q** is applied to the pulley *C*, which can roll on the cable *ACB*. The pulley is held in the position shown by a second cable *CAD*, which passes over the pulley *A* and supports a load **P**. Knowing that $P = 750$ N, determine (*a*) the tension in cable *ACB*, (*b*) the magnitude of load **Q**.

SOLUTION

Free-Body Diagram: Pulley *C*

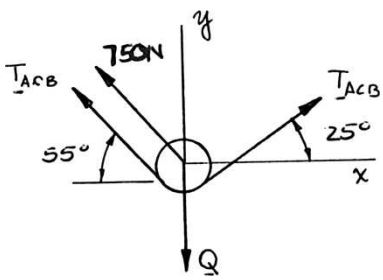

(*a*) $\xrightarrow{+} \Sigma F_x = 0: \quad T_{ACB}(\cos 25° - \cos 55°) - (750 \text{ N})\cos 55° = 0$

Hence: $T_{ACB} = 1292.88$ N

$T_{ACB} = 1293$ N ◀

(*b*) $+\uparrow \Sigma F_y = 0: \quad T_{ACB}(\sin 25° + \sin 55°) + (750 \text{ N})\sin 55° - Q = 0$

$(1292.88 \text{ N})(\sin 25° + \sin 55°) + (750 \text{ N})\sin 55° - Q = 0$

or $Q = 2219.8$ N $\quad Q = 2220$ N ◀

Copyright © McGraw-Hill Education. All rights reserved. No reproduction or distribution without the prior written consent of McGraw-Hill Education.

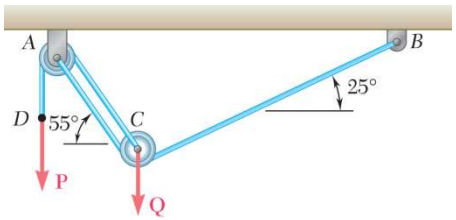

PROBLEM 2.55

An 1800-N load **Q** is applied to the pulley *C*, which can roll on the cable *ACB*. The pulley is held in the position shown by a second cable *CAD*, which passes over the pulley *A* and supports a load **P**. Determine (*a*) the tension in cable *ACB*, (*b*) the magnitude of load **P**.

SOLUTION

Free-Body Diagram: Pulley *C*

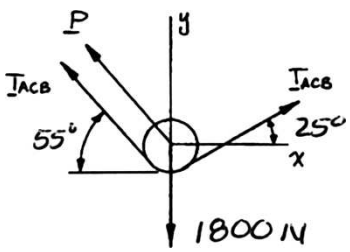

$$\xrightarrow{+} \Sigma F_x = 0: \quad T_{ACB}(\cos 25° - \cos 55°) - P\cos 55° = 0$$

or $$P = 0.58010 T_{ACB} \quad (1)$$

$$+\uparrow \Sigma F_y = 0: \quad T_{ACB}(\sin 25° + \sin 55°) + P\sin 55° - 1800 \text{ N} = 0$$

or $$1.24177 T_{ACB} + 0.81915 P = 1800 \text{ N} \quad (2)$$

(*a*) Substitute Equation (1) into Equation (2):

$$1.24177 T_{ACB} + 0.81915(0.58010 T_{ACB}) = 1800 \text{ N}$$

Hence: $$T_{ACB} = 1048.37 \text{ N}$$

$$T_{ACB} = 1048 \text{ N} \blacktriangleleft$$

(*b*) Using (1), $$P = 0.58010(1048.37 \text{ N}) = 608.16 \text{ N}$$

$$P = 608 \text{ N} \blacktriangleleft$$

Copyright © McGraw-Hill Education. All rights reserved. No reproduction or distribution without the prior written consent of McGraw-Hill Education.

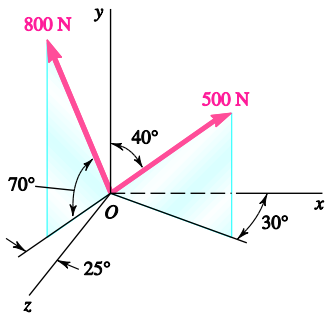

PROBLEM 2.56

Determine (*a*) the *x*, *y*, and *z* components of the 500-N force, (*b*) the angles θ_x, θ_y, and θ_z that the force forms with the coordinate axes.

SOLUTION

(*a*)

$$F_x = (500\text{ N})\sin 40°\cos 30°$$

$$F_x = 278.34\text{ N} \qquad F_x = 278\text{ N} \blacktriangleleft$$

$$F_y = (500\text{ N})\cos 40°$$

$$F_y = 383.02\text{ N} \qquad F_y = 383\text{ N} \blacktriangleleft$$

$$F_z = (500\text{ N})\sin 40°\sin 30°$$

$$F_z = 160.697\text{ N} \qquad F_z = 160.7\text{ N} \blacktriangleleft$$

(*b*)

$$\cos\theta_x = \frac{F_x}{F} = \frac{278.34\text{ N}}{500\text{ N}} \qquad \theta_x = 56.2° \blacktriangleleft$$

$$\cos\theta_y = \frac{F_y}{F} = \frac{383.02\text{ N}}{500\text{ N}} \qquad \theta_y = 40.0° \blacktriangleleft$$

$$\cos\theta_z = \frac{F_z}{F} = \frac{160.697\text{ N}}{500\text{ N}} \qquad \theta_z = 71.3° \blacktriangleleft$$

Copyright © McGraw-Hill Education. All rights reserved. No reproduction or distribution without the prior written consent of McGraw-Hill Education.

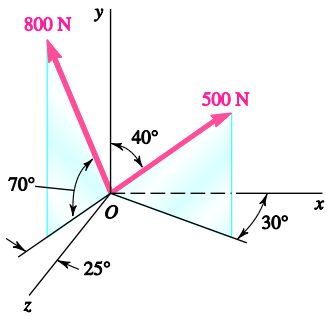

PROBLEM 2.57

Determine (*a*) the *x*, *y*, and *z* components of the 800-N force, (*b*) the angles θ_x, θ_y, and θ_z that the force forms with the coordinate axes.

SOLUTION

(*a*)

$$F_x = -(800\text{ N})\cos 70°\sin 25°$$

$$F_x = -115.635\text{ N} \qquad F_x = -115.6\text{ N} \blacktriangleleft$$

$$F_y = (800\text{ N})\sin\ 70°$$

$$F_y = 751.75\text{ N} \qquad F_y = 752\text{ N} \blacktriangleleft$$

$$F_z = (800\text{ N})\cos 70°\cos 25°$$

$$F_z = 247.98\text{ N} \qquad F_z = 248\text{ N} \blacktriangleleft$$

(*b*)

$$\cos\theta_x = \frac{F_x}{F} = \frac{-115.635\text{ N}}{800\text{ N}} \qquad \theta_x = 98.3° \blacktriangleleft$$

$$\cos\theta_y = \frac{F_y}{F} = \frac{751.75\text{ N}}{800\text{ N}} \qquad \theta_y = 20.0° \blacktriangleleft$$

$$\cos\theta_z = \frac{F_z}{F} = \frac{247.98\text{ N}}{800\text{ N}} \qquad \theta_z = 71.9° \blacktriangleleft$$

Note: From the given data, we could have computed directly $\theta_y = 90° - 35° = 55°$, which checks with the answer obtained.

Copyright © McGraw-Hill Education. All rights reserved. No reproduction or distribution without the prior written consent of McGraw-Hill Education.

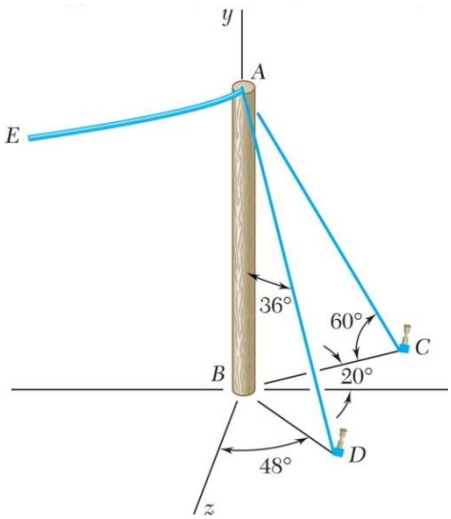

PROBLEM 2.58

The end of the coaxial cable AE is attached to the pole AB, which is strengthened by the guy wires AC and AD. Knowing that the tension in wire AC is 120 lb, determine (*a*) the components of the force exerted by this wire on the pole, (*b*) the angles θ_x, θ_y, and θ_z that the force forms with the coordinate axes.

SOLUTION

(*a*)

$$F_x = (120 \text{ lb})\cos 60° \cos 20°$$

$$F_x = 56.382 \text{ lb} \qquad F_x = +56.4 \text{ lb} \blacktriangleleft$$

$$F_y = -(120 \text{ lb})\sin 60°$$

$$F_y = -103.923 \text{ lb} \qquad F_y = -103.9 \text{ lb} \blacktriangleleft$$

$$F_z = -(120 \text{ lb})\cos 60° \sin 20°$$

$$F_z = -20.521 \text{ lb} \qquad F_z = -20.5 \text{ lb} \blacktriangleleft$$

(*b*)

$$\cos\theta_x = \frac{F_x}{F} = \frac{56.382 \text{ lb}}{120 \text{ lb}} \qquad \theta_x = 62.0° \blacktriangleleft$$

$$\cos\theta_y = \frac{F_y}{F} = \frac{-103.923 \text{ lb}}{120 \text{ lb}} \qquad \theta_y = 150.0° \blacktriangleleft$$

$$\cos\theta_z = \frac{F_z}{F} = \frac{-20.52 \text{ lb}}{120 \text{ lb}} \qquad \theta_z = 99.8° \blacktriangleleft$$

Copyright © McGraw-Hill Education. All rights reserved. No reproduction or distribution without the prior written consent of McGraw-Hill Education.

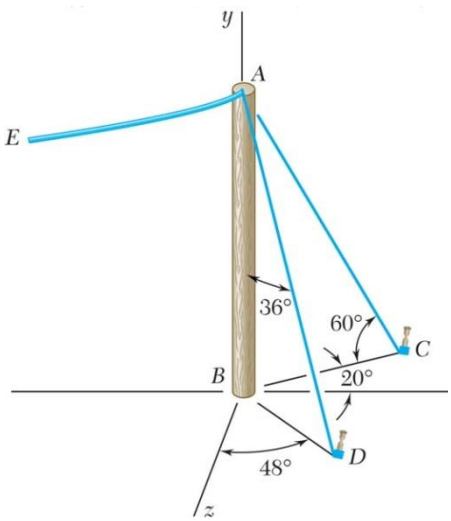

PROBLEM 2.59

The end of the coaxial cable AE is attached to the pole AB, which is strengthened by the guy wires AC and AD. Knowing that the tension in wire AD is 85 lb, determine (a) the components of the force exerted by this wire on the pole, (b) the angles θ_x, θ_y, and θ_z that the force forms with the coordinate axes.

SOLUTION

(a)

$$F_x = (85 \text{ lb}) \sin 36° \sin 48°$$
$$= 37.129 \text{ lb} \qquad F_x = 37.1 \text{ lb} \blacktriangleleft$$

$$F_y = -(85 \text{ lb}) \cos 36°$$
$$= -68.766 \text{ lb} \qquad F_y = -68.8 \text{ lb} \blacktriangleleft$$

$$F_z = (85 \text{ lb}) \sin 36° \cos 48°$$
$$= 33.431 \text{ lb} \qquad F_z = 33.4 \text{ lb} \blacktriangleleft$$

(b)

$$\cos \theta_x = \frac{F_x}{F} = \frac{37.129 \text{ lb}}{85 \text{ lb}} \qquad \theta_x = 64.1° \blacktriangleleft$$

$$\cos \theta_y = \frac{F_y}{F} = \frac{-68.766 \text{ lb}}{85 \text{ lb}} \qquad \theta_y = 144.0° \blacktriangleleft$$

$$\cos \theta_z = \frac{F_z}{F} = \frac{33.431 \text{ lb}}{85 \text{ lb}} \qquad \theta_z = 66.8° \blacktriangleleft$$

Copyright © McGraw-Hill Education. All rights reserved. No reproduction or distribution without the prior written consent of McGraw-Hill Education.

PROBLEM 2.60

A gun is aimed at a point A located 35° east of north. Knowing that the barrel of the gun forms an angle of 40° with the horizontal and that the maximum recoil force is 400 N, determine (a) the x, y, and z components of that force, (b) the values of the angles θ_x, θ_y, and θ_z defining the direction of the recoil force. (Assume that the x, y, and z axes are directed, respectively, east, up, and south.)

SOLUTION

Recoil force $\quad F = 400 \text{ N}$

$$\therefore \quad F_H = (400 \text{ N})\cos 40° = 306.42 \text{ N}$$

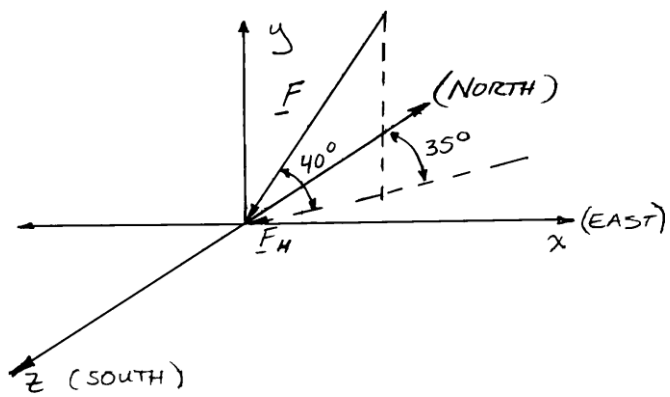

(a)

$$F_x = -F_H \sin 35° = -(306.42 \text{ N})\sin 35° = -175.755 \text{ N} \qquad F_x = -175.8 \text{ N} \blacktriangleleft$$

$$F_y = -F \sin 40° = -(400 \text{ N})\sin 40° = -257.12 \text{ N} \qquad F_y = -257 \text{ N} \blacktriangleleft$$

$$F_z = +F_H \cos 35° = +(306.42 \text{ N})\cos 35° = +251.00 \text{ N} \qquad F_z = +251 \text{ N} \blacktriangleleft$$

(b)

$$\cos\theta_x = \frac{F_x}{F} = \frac{-175.755 \text{ N}}{400 \text{ N}} \qquad \theta_x = 116.1° \blacktriangleleft$$

$$\cos\theta_y = \frac{F_y}{F} = \frac{-257.12 \text{ N}}{400 \text{ N}} \qquad \theta_y = 130.0° \blacktriangleleft$$

$$\cos\theta_z = \frac{F_z}{F} = \frac{251.00 \text{ N}}{400 \text{ N}} \qquad \theta_z = 51.1° \blacktriangleleft$$

Copyright © McGraw-Hill Education. All rights reserved. No reproduction or distribution without the prior written consent of McGraw-Hill Education.

PROBLEM 2.61

Solve Problem 2.60, assuming that point A is located 15° north of west and that the barrel of the gun forms an angle of 25° with the horizontal.

PROBLEM 2.60 A gun is aimed at a point A located 35° east of north. Knowing that the barrel of the gun forms an angle of 40° with the horizontal and that the maximum recoil force is 400 N, determine (*a*) the x, y, and z components of that force, (*b*) the values of the angles θ_x, θ_y, and θ_z defining the direction of the recoil force. (Assume that the x, y, and z axes are directed, respectively, east, up, and south.)

SOLUTION

Recoil force $\quad F = 400 \text{ N}$

$$\therefore \quad F_H = (400 \text{ N})\cos 25° = 362.52 \text{ N}$$

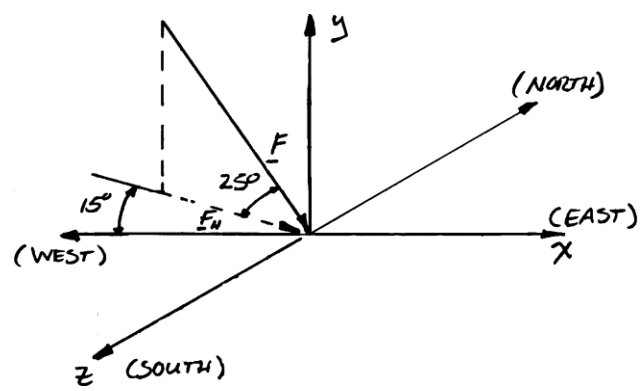

(*a*)

$$F_x = +F_H \cos 15° = +(362.52 \text{ N})\cos 15° = +350.17 \text{ N} \qquad F_x = +350 \text{ N} \blacktriangleleft$$

$$F_y = -F \sin 25° = -(400 \text{ N})\sin 25° = -169.047 \text{ N} \qquad F_y = -169.0 \text{ N} \blacktriangleleft$$

$$F_z = +F_H \sin 15° = +(362.52 \text{ N})\sin 15° = +93.827 \text{ N} \qquad F_z = +93.8 \text{ N} \blacktriangleleft$$

(*b*)

$$\cos\theta_x = \frac{F_x}{F} = \frac{+350.17 \text{ N}}{400 \text{ N}} \qquad \theta_x = 28.9° \blacktriangleleft$$

$$\cos\theta_y = \frac{F_y}{F} = \frac{-169.047 \text{ N}}{400 \text{ N}} \qquad \theta_y = 115.0° \blacktriangleleft$$

$$\cos\theta_z = \frac{F_z}{F} = \frac{+93.827 \text{ N}}{400 \text{ N}} \qquad \theta_z = 76.4° \blacktriangleleft$$

Copyright © McGraw-Hill Education. All rights reserved. No reproduction or distribution without the prior written consent of McGraw-Hill Education.

PROBLEM 2.62

Determine the magnitude and direction of the force **F** = (690 lb)**i** + (300 lb)**j** – (580 lb)**k**.

SOLUTION

$$\mathbf{F} = (690\text{ lb})\mathbf{i} + (300\text{ lb})\mathbf{j} - (580\text{ lb})\mathbf{k}$$

$$F = \sqrt{F_x^2 + F_y^2 + F_z^2}$$

$$= \sqrt{(690\text{ lb})^2 + (300\text{ lb})^2 + (-580\text{ lb})^2}$$

$$= 950\text{ lb} \qquad F = 950\text{ lb} \blacktriangleleft$$

$$\cos\theta_x = \frac{F_x}{F} = \frac{690\text{ lb}}{950\text{ lb}} \qquad \theta_x = 43.4° \blacktriangleleft$$

$$\cos\theta_y = \frac{F_y}{F} = \frac{300\text{ lb}}{950\text{ lb}} \qquad \theta_y = 71.6° \blacktriangleleft$$

$$\cos\theta_z = \frac{F_z}{F} = \frac{-580\text{ lb}}{950\text{ lb}} \qquad \theta_z = 127.6° \blacktriangleleft$$

Copyright © McGraw-Hill Education. All rights reserved. No reproduction or distribution without the prior written consent of McGraw-Hill Education.

PROBLEM 2.63

Determine the magnitude and direction of the force **F** = (260 N)**i** – (320 N)**j** + (800 N)**k**.

SOLUTION

$$F = \sqrt{F_x^2 + F_y^2 + F_z^2}$$

$$F = \sqrt{(260\text{ N})^2 + (-320\text{ N})^2 + (800\text{ N})^2} \qquad F = 900\text{ N} \blacktriangleleft$$

$$\cos\theta_x = \frac{F_x}{F} = \frac{260\text{ N}}{900\text{ N}} \qquad \theta_x = 73.2° \blacktriangleleft$$

$$\cos\theta_y = \frac{F_y}{F} = \frac{-320\text{ N}}{900\text{ N}} \qquad \theta_y = 110.8° \blacktriangleleft$$

$$\cos\theta_y = \frac{F_z}{F} = \frac{800\text{ N}}{900\text{ N}} \qquad \theta_z = 27.3° \blacktriangleleft$$

Copyright © McGraw-Hill Education. All rights reserved. No reproduction or distribution without the prior written consent of McGraw-Hill Education.

PROBLEM 2.64

A force acts at the origin of a coordinate system in a direction defined by the angles $\theta_x = 69.3°$ and $\theta_z = 57.9°$. Knowing that the y component of the force is –174.0 lb, determine (*a*) the angle θ_y, (*b*) the other components and the magnitude of the force.

SOLUTION

$$\cos^2\theta_x + \cos^2\theta_y + \cos^2\theta_z = 1$$

$$\cos^2(69.3°) + \cos^2\theta_y + \cos^2(57.9°) = 1$$

$$\cos\theta_y = \pm 0.7699$$

(*a*) Since $F_y < 0$, we choose $\cos\theta_y = -0.7699$ $\quad \therefore \quad \theta_y = 140.3°$ ◀

(*b*)

$$F_y = F\cos\theta_y$$

$$-174.0 \text{ lb} = F(-0.7699)$$

$$F = 226.0 \text{ lb} \qquad F = 226 \text{ lb} ◀$$

$$F_x = F\cos\theta_x = (226.0 \text{ lb})\cos 69.3° \qquad F_x = 79.9 \text{ lb} ◀$$

$$F_z = F\cos\theta_z = (226.0 \text{ lb})\cos 57.9° \qquad F_z = 120.1 \text{ lb} ◀$$

Copyright © McGraw-Hill Education. All rights reserved. No reproduction or distribution without the prior written consent of McGraw-Hill Education.

PROBLEM 2.65

A force acts at the origin of a coordinate system in a direction defined by the angles $\theta_x = 70.9°$ and $\theta_y = 144.9°$. Knowing that the z component of the force is -52.0 lb, determine (a) the angle θ_z, (b) the other components and the magnitude of the force.

SOLUTION

$$\cos^2\theta_x + \cos^2\theta_y + \cos^2\theta_z = 1$$

$$\cos^2 70.9° + \cos^2 144.9° + \cos^2\theta_z° = 1$$

$$\cos\theta_z = \pm 0.47282$$

(a) Since $F_z < 0$, we choose $\cos\theta_z = -0.47282$ $\quad \therefore \quad \theta_z = 118.2°$ ◀

(b)

$$F_z = F\cos\theta_z$$

$$-52.0\ lb = F(-0.47282)$$

$$F = 110.0\ \text{lb} \qquad F = 110.0\ \text{lb} \ ◀$$

$$F_x = F\cos\theta_x = (110.0\ \text{lb})\cos 70.9° \qquad F_x = 36.0\ \text{lb} \ ◀$$

$$F_y = F\cos\theta_y = (110.0\ \text{lb})\cos 144.9° \qquad F_y = -90.0\ \text{lb} \ ◀$$

Copyright © McGraw-Hill Education. All rights reserved. No reproduction or distribution without the prior written consent of McGraw-Hill Education.

PROBLEM 2.66

A force acts at the origin of a coordinate system in a direction defined by the angles $\theta_y = 55°$ and $\theta_z = 45°$. Knowing that the x component of the force is – 500 lb, determine (*a*) the angle θ_x, (*b*) the other components and the magnitude of the force.

SOLUTION

(*a*) We have

$$(\cos\theta_x)^2 + (\cos\theta_y)^2 + (\cos\theta_z)^2 = 1 \Rightarrow (\cos\theta_y)^2 = 1 - (\cos\theta_y)^2 - (\cos\theta_z)^2$$

Since $F_x < 0$ we must have $\cos\theta_x$, 0

Thus, taking the negative square root, from above, we have:

$$\cos\theta_x = -\sqrt{1 - (\cos 55)^2 - (\cos 45)^2} = 0.41353 \qquad \theta_x = 114.4° \blacktriangleleft$$

(*b*) Then:

$$F = \frac{F_x}{\cos\theta_x} = \frac{500 \text{ lb}}{0.41353} = 1209.10 \text{ lb} \qquad F = 1209 \text{ lb} \blacktriangleleft$$

and

$$F_y = F\cos\theta_y = (1209.10 \text{ lb})\cos 55° \qquad F_y = 694 \text{ lb} \blacktriangleleft$$

$$F_z = F\cos\theta_z = (1209.10 \text{ lb})\cos 45° \qquad F_z = 855 \text{ lb} \blacktriangleleft$$

Copyright © McGraw-Hill Education. All rights reserved. No reproduction or distribution without the prior written consent of McGraw-Hill Education.

PROBLEM 2.67

A force **F** of magnitude 1200 N acts at the origin of a coordinate system. Knowing that $\theta_x = 65°$, $\theta_y = 40°$, and $F_z > 0$, determine (*a*) the components of the force, (*b*) the angle θ_z.

SOLUTION

$$\cos^2\theta_x + \cos^2\theta_y + \cos^2\theta_z = 1$$

$$\cos^2 65° + \cos^2 40° + \cos^2\theta_z° = 1$$

$$\cos\theta_z = \pm 0.48432$$

(*b*) Since $F_z > 0$, we choose $\cos\theta_z = 0.48432$, or $\theta_z = 61.032°$ $\quad \therefore \quad \theta_z = 61.0°$ ◀

(*a*) $F = 1200$ N

$$F_x = F\cos\theta_x = (1200\text{ N})\cos 65° \qquad F_x = 507\text{ N} \blacktriangleleft$$

$$F_y = F\cos\theta_y = (1200\text{ N})\cos 40° \qquad F_y = 919\text{ N} \blacktriangleleft$$

$$F_z = F\cos\theta_z = (1200\text{ N})\cos 61.032° \qquad F_z = 582\text{ N} \blacktriangleleft$$

Copyright © McGraw-Hill Education. All rights reserved. No reproduction or distribution without the prior written consent of McGraw-Hill Education.

PROBLEM 2.68

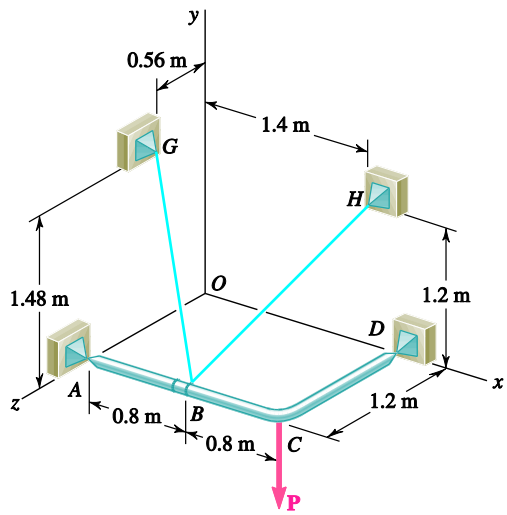

Two cables *BG* and *BH* are attached to frame *ACD* as shown. Knowing that the tension in cable *BG* is 540 N, determine the components of the force exerted by cable *BG* on the frame at *B*.

SOLUTION

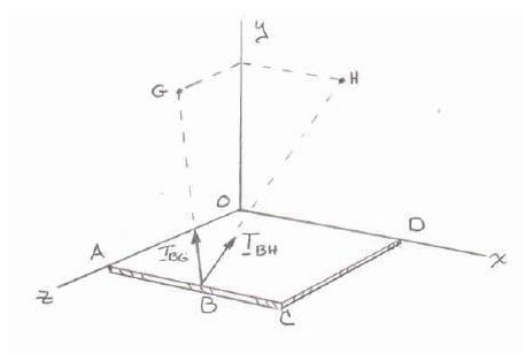

$$\overrightarrow{BG} = -(0.8\text{ m})\mathbf{i} + (1.48\text{ m})\mathbf{j} - (0.64\text{ m})\mathbf{k}$$

$$BG = \sqrt{(-0.8\text{ m})^2 + (1.48\text{ m}^2) + (-0.64\text{ m})^2}$$

$$= 1.8\text{ m}$$

$$\mathbf{T}_{BG} = T_{BG}\boldsymbol{\lambda}_{BG}$$

$$= T_{BG}\frac{\overrightarrow{BG}}{BG}$$

$$= \frac{540\text{ N}}{1.8\text{ m}}[(-0.8\text{ m})\mathbf{i} + (1.48\text{ m})\mathbf{j} + (-0.64\text{ m})\mathbf{k}]$$

$$T_{BG} = (-240\text{ N})\mathbf{i} + (444\text{ N})\mathbf{j} - (192.0\text{ N})\mathbf{k}$$

$F_x = -240$ N, $F_y = +444$ N, $F_z = +192.0$ N ◀

Copyright © McGraw-Hill Education. All rights reserved. No reproduction or distribution without the prior written consent of McGraw-Hill Education.

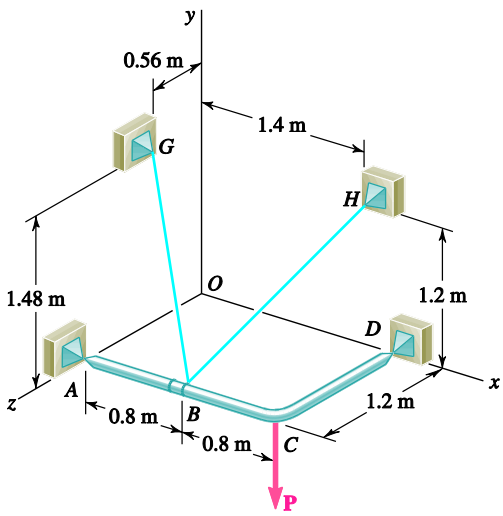

PROBLEM 2.69

Two cables *BG* and *BH* are attached to frame *ACD* as shown. Knowing that the tension in cable *BH* is 750 N, determine the components of the force exerted by cable *BH* on the frame at *B*.

SOLUTION

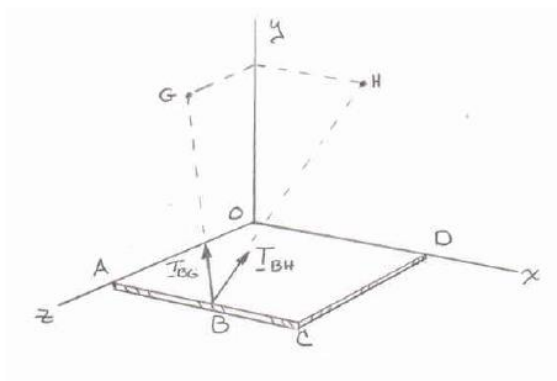

$$\overrightarrow{BH} = (0.6\text{ m})\mathbf{i} + (1.2\text{ m})\mathbf{j} - (1.2\text{ m})\mathbf{k}$$

$$BH = \sqrt{(0.6\text{ m})^2 + (1.2\text{ m})^2 - (1.2\text{ m})^2}$$

$$= 1.8\text{ m}$$

$$\mathbf{T}_{BH} = T_{BH}\boldsymbol{\lambda}_{BH}$$

$$= T_{BH}\frac{\overrightarrow{BH}}{BH}$$

$$= \frac{750\text{ N}}{3\text{ m}}[\mathbf{i} + 2\mathbf{j} - 2\mathbf{k}]\text{ (m)}$$

$$T_{BH} = (250\text{ N})\mathbf{i} + (500\text{ N})\mathbf{j} - (500\text{ N})\mathbf{k}$$

$F_x = +250$ N, $F_y = +500$ N, $F_z = -500$ N ◀

Copyright © McGraw-Hill Education. All rights reserved. No reproduction or distribution without the prior written consent of McGraw-Hill Education.

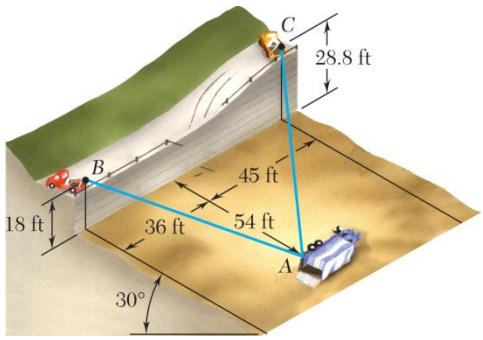

PROBLEM 2.70

In order to move a wrecked truck, two cables are attached at A and pulled by winches B and C as shown. Knowing that the tension in cable AB is 2 kips, determine the components of the force exerted at A by the cable.

SOLUTION

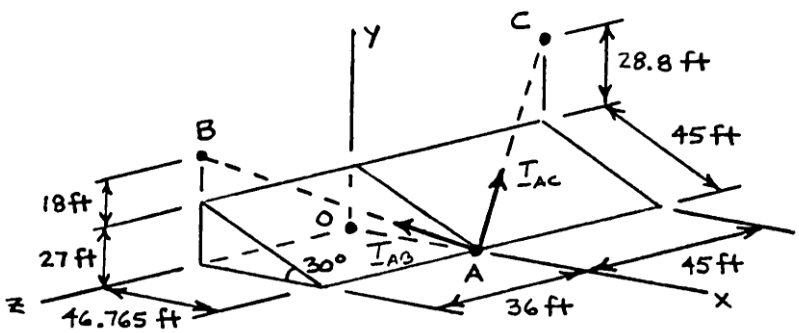

AB = 74.216 ft AC = 85.590 ft

Cable AB:

$$\boldsymbol{\lambda}_{AB} = \frac{\overrightarrow{AB}}{AB} = \frac{(-46.765\text{ ft})\mathbf{i} + (45\text{ ft})\mathbf{j} + (36\text{ ft})\mathbf{k}}{74.216\text{ ft}}$$

$$\mathbf{T}_{AB} = T_{AB}\boldsymbol{\lambda}_{AB} = \frac{-46.765\mathbf{i} + 45\mathbf{j} + 36\mathbf{k}}{74.216}$$

$(T_{AB})_x = -1.260$ kips ◀

$(T_{AB})_y = +1.213$ kips ◀

$(T_{AB})_z = +0.970$ kips ◀

Copyright © McGraw-Hill Education. All rights reserved. No reproduction or distribution without the prior written consent of McGraw-Hill Education.

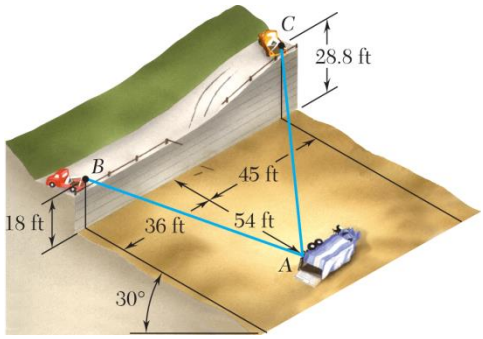

PROBLEM 2.71

In order to move a wrecked truck, two cables are attached at A and pulled by winches B and C as shown. Knowing that the tension in cable AC is 1.5 kips, determine the components of the force exerted at A by the cable.

SOLUTION

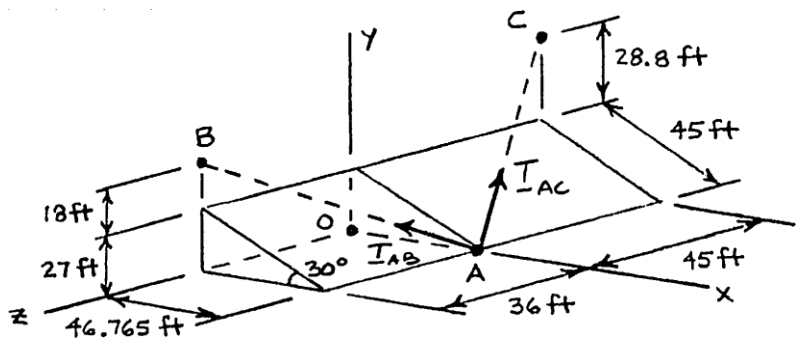

AB = 74.216 ft AC = 85.590 ft

Cable AB:

$$\boldsymbol{\lambda}_{AC} = \frac{\overrightarrow{AC}}{AC} = \frac{(-46.765\text{ ft})\mathbf{i} + (55.8\text{ ft})\mathbf{j} + (-45\text{ ft})\mathbf{k}}{85.590\text{ ft}}$$

$$\mathbf{T}_{AC} = T_{AC}\,\boldsymbol{\lambda}_{AC} = (1.5\text{ kips})\frac{-46.765\mathbf{i} + 55.8\mathbf{j} - 45\mathbf{k}}{85.590}$$

$(T_{AC})_x = -0.820$ kips ◀

$(T_{AC})_y = +0.978$ kips ◀

$(T_{AC})_z = -0.789$ kips ◀

Copyright © McGraw-Hill Education. All rights reserved. No reproduction or distribution without the prior written consent of McGraw-Hill Education.

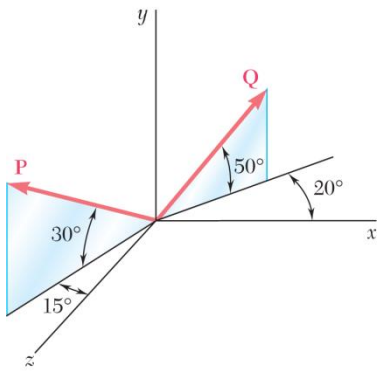

PROBLEM 2.72

Find the magnitude and direction of the resultant of the two forces shown knowing that $P = 300$ N and $Q = 400$ N.

SOLUTION

$$\mathbf{P} = (300\text{ N})[-\cos 30°\sin 15°\mathbf{i} + \sin 30°\mathbf{j} + \cos 30°\cos 15°\mathbf{k}]$$
$$= -(67.243\text{ N})\mathbf{i} + (150\text{ N})\mathbf{j} + (250.95\text{ N})\mathbf{k}$$
$$\mathbf{Q} = (400\text{ N})[\cos 50°\cos 20°\mathbf{i} + \sin 50°\mathbf{j} - \cos 50°\sin 20°\mathbf{k}]$$
$$= (400\text{ N})[0.60402\mathbf{i} + 0.76604\mathbf{j} - 0.21985]$$
$$= (241.61\text{ N})\mathbf{i} + (306.42\text{ N})\mathbf{j} - (87.939\text{ N})\mathbf{k}$$
$$\mathbf{R} = \mathbf{P} + \mathbf{Q}$$
$$= (174.367\text{ N})\mathbf{i} + (456.42\text{ N})\mathbf{j} + (163.011\text{ N})\mathbf{k}$$
$$R = \sqrt{(174.367\text{ N})^2 + (456.42\text{ N})^2 + (163.011\text{ N})^2}$$
$$= 515.07\text{ N} \qquad R = 515\text{ N} \blacktriangleleft$$

$$\cos\theta_x = \frac{R_x}{R} = \frac{174.367\text{ N}}{515.07\text{ N}} = 0.33853 \qquad \theta_x = 70.2° \blacktriangleleft$$

$$\cos\theta_y = \frac{R_y}{R} = \frac{456.42\text{ N}}{515.07\text{ N}} = 0.88613 \qquad \theta_y = 27.6° \blacktriangleleft$$

$$\cos\theta_z = \frac{R_z}{R} = \frac{163.011\text{ N}}{515.07\text{ N}} = 0.31648 \qquad \theta_z = 71.5° \blacktriangleleft$$

Copyright © McGraw-Hill Education. All rights reserved. No reproduction or distribution without the prior written consent of McGraw-Hill Education.

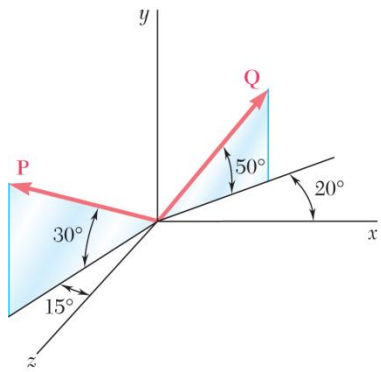

PROBLEM 2.73

Find the magnitude and direction of the resultant of the two forces shown knowing that $P = 400$ N and $Q = 300$ N.

SOLUTION

$$\mathbf{P} = (400\text{ N})[-\cos 30°\sin 15°\mathbf{i} + \sin 30°\mathbf{j} + \cos 30°\cos 15°\mathbf{k}]$$
$$= -(89.678\text{ N})\mathbf{i} + (200\text{ N})\mathbf{j} + (334.61\text{ N})\mathbf{k}$$
$$\mathbf{Q} = (300\text{ N})[\cos 50°\cos 20°\mathbf{i} + \sin 50°\mathbf{j} - \cos 50°\sin 20°\mathbf{k}]$$
$$= (181.21\text{ N})\mathbf{i} + (229.81\text{ N})\mathbf{j} - (65.954\text{ N})\mathbf{k}$$
$$\mathbf{R} = \mathbf{P} + \mathbf{Q}$$
$$= (91.532\text{ N})\mathbf{i} + (429.81\text{ N})\mathbf{j} + (268.66\text{ N})\mathbf{k}$$
$$R = \sqrt{(91.532\text{ N})^2 + (429.81\text{ N})^2 + (268.66\text{ N})^2}$$
$$= 515.07\text{ N} \qquad R = 515\text{ N} \blacktriangleleft$$

$$\cos\theta_x = \frac{R_x}{R} = \frac{91.532\text{ N}}{515.07\text{ N}} = 0.177708 \qquad \theta_x = 79.8° \blacktriangleleft$$

$$\cos\theta_y = \frac{R_y}{R} = \frac{429.81\text{ N}}{515.07\text{ N}} = 0.83447 \qquad \theta_y = 33.4° \blacktriangleleft$$

$$\cos\theta_z = \frac{R_z}{R} = \frac{268.66\text{ N}}{515.07\text{ N}} = 0.52160 \qquad \theta_z = 58.6° \blacktriangleleft$$

Copyright © McGraw-Hill Education. All rights reserved. No reproduction or distribution without the prior written consent of McGraw-Hill Education.

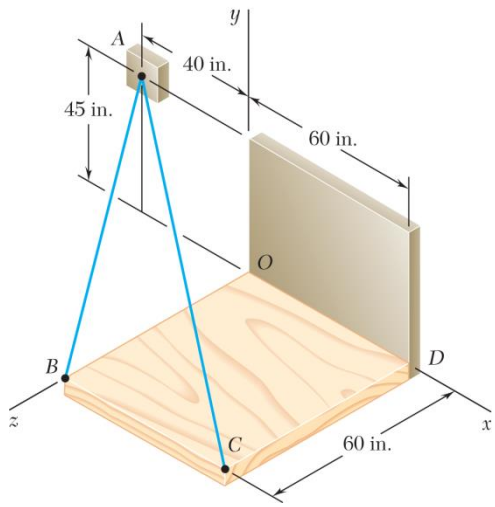

PROBLEM 2.74

Knowing that the tension is 425 lb in cable *AB* and 510 lb in cable *AC*, determine the magnitude and direction of the resultant of the forces exerted at *A* by the two cables.

SOLUTION

$$\overrightarrow{AB} = (40\text{ in.})\mathbf{i} - (45\text{ in.})\mathbf{j} + (60\text{ in.})\mathbf{k}$$

$$AB = \sqrt{(40\text{ in.})^2 + (45\text{ in.})^2 + (60\text{ in.})^2} = 85\text{ in.}$$

$$\overrightarrow{AC} = (100\text{ in.})\mathbf{i} - (45\text{ in.})\mathbf{j} + (60\text{ in.})\mathbf{k}$$

$$AC = \sqrt{(100\text{ in.})^2 + (45\text{ in.})^2 + (60\text{ in.})^2} = 125\text{ in.}$$

$$\mathbf{T}_{AB} = T_{AB}\boldsymbol{\lambda}_{AB} = T_{AB}\frac{\overrightarrow{AB}}{AB} = (425\text{ lb})\left[\frac{(40\text{ in.})\mathbf{i} - (45\text{ in.})\mathbf{j} + (60\text{ in.})\mathbf{k}}{85\text{ in.}}\right]$$

$$\mathbf{T}_{AB} = (200\text{ lb})\mathbf{i} - (225\text{ lb})\mathbf{j} + (300\text{ lb})\mathbf{k}$$

$$\mathbf{T}_{AC} = T_{AC}\boldsymbol{\lambda}_{AC} = T_{AC}\frac{\overrightarrow{AC}}{AC} = (510\text{ lb})\left[\frac{(100\text{ in.})\mathbf{i} - (45\text{ in.})\mathbf{j} + (60\text{ in.})\mathbf{k}}{125\text{ in.}}\right]$$

$$\mathbf{T}_{AC} = (408\text{ lb})\mathbf{i} - (183.6\text{ lb})\mathbf{j} + (244.8\text{ lb})\mathbf{k}$$

$$\mathbf{R} = \mathbf{T}_{AB} + \mathbf{T}_{AC} = (608)\mathbf{i} - (408.6\text{ lb})\mathbf{j} + (544.8\text{ lb})\mathbf{k}$$

Then: $R = 912.92\text{ lb}$ $\qquad R = 913\text{ lb}$ ◀

and $\cos\theta_x = \dfrac{608\text{ lb}}{912.92\text{ lb}} = 0.66599$ $\qquad \theta_x = 48.2°$ ◀

$\cos\theta_y = \dfrac{408.6\text{ lb}}{912.92\text{ lb}} = -0.44757$ $\qquad \theta_y = 116.6°$ ◀

$\cos\theta_z = \dfrac{544.8\text{ lb}}{912.92\text{ lb}} = 0.59677$ $\qquad \theta_z = 53.4°$ ◀

Copyright © McGraw-Hill Education. All rights reserved. No reproduction or distribution without the prior written consent of McGraw-Hill Education.

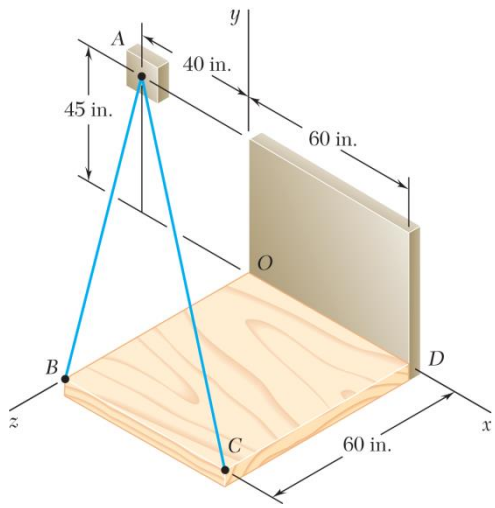

PROBLEM 2.75

Knowing that the tension is 510 lb in cable AB and 425 lb in cable AC, determine the magnitude and direction of the resultant of the forces exerted at A by the two cables.

SOLUTION

$$\overrightarrow{AB} = (40\text{ in.})\mathbf{i} - (45\text{ in.})\mathbf{j} + (60\text{ in.})\mathbf{k}$$

$$AB = \sqrt{(40\text{ in.})^2 + (45\text{ in.})^2 + (60\text{ in.})^2} = 85\text{ in.}$$

$$\overrightarrow{AC} = (100\text{ in.})\mathbf{i} - (45\text{ in.})\mathbf{j} + (60\text{ in.})\mathbf{k}$$

$$AC = \sqrt{(100\text{ in.})^2 + (45\text{ in.})^2 + (60\text{ in.})^2} = 125\text{ in.}$$

$$\mathbf{T}_{AB} = T_{AB}\boldsymbol{\lambda}_{AB} = T_{AB}\frac{\overrightarrow{AB}}{AB} = (510\text{ lb})\left[\frac{(40\text{ in.})\mathbf{i} - (45\text{ in.})\mathbf{j} + (60\text{ in.})\mathbf{k}}{85\text{ in.}}\right]$$

$$\mathbf{T}_{AB} = (240\text{ lb})\mathbf{i} - (270\text{ lb})\mathbf{j} + (360\text{ lb})\mathbf{k}$$

$$\mathbf{T}_{AC} = T_{AC}\boldsymbol{\lambda}_{AC} = T_{AC}\frac{\overrightarrow{AC}}{AC} = (425\text{ lb})\left[\frac{(100\text{ in.})\mathbf{i} - (45\text{ in.})\mathbf{j} + (60\text{ in.})\mathbf{k}}{125\text{ in.}}\right]$$

$$\mathbf{T}_{AC} = (340\text{ lb})\mathbf{i} - (153\text{ lb})\mathbf{j} + (204\text{ lb})\mathbf{k}$$

$$\mathbf{R} = \mathbf{T}_{AB} + \mathbf{T}_{AC} = (580\text{ lb})\mathbf{i} - (423\text{ lb})\mathbf{j} + (564\text{ lb})\mathbf{k}$$

Then: $R = 912.92\text{ lb}$ $\qquad R = 913\text{ lb}$ ◀

and $\cos\theta_x = \dfrac{580\text{ lb}}{912.92\text{ lb}} = 0.63532$ $\qquad \theta_x = 50.6°$ ◀

$\cos\theta_y = \dfrac{-423\text{ lb}}{912.92\text{ lb}} = -0.46335$ $\qquad \theta_y = 117.6°$ ◀

$\cos\theta_z = \dfrac{564\text{ lb}}{912.92\text{ lb}} = 0.61780$ $\qquad \theta_z = 51.8°$ ◀

Copyright © McGraw-Hill Education. All rights reserved. No reproduction or distribution without the prior written consent of McGraw-Hill Education.

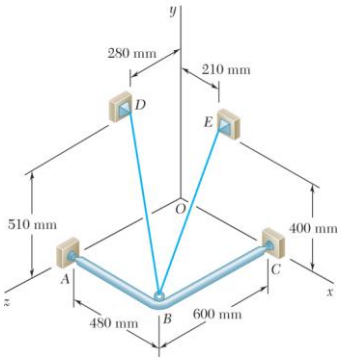

PROBLEM 2.76

A frame *ABC* is supported in part by cable *DBE* that passes through a frictionless ring at *B*. Knowing that the tension in the cable is 385 N, determine the components of the force exerted by the cable on the support at *D*.

SOLUTION

$$\overrightarrow{BD} = -(480\text{ mm})\mathbf{i} + (510\text{ mm})\mathbf{j} - (320\text{ mm})\mathbf{k}$$

$$BD = \sqrt{(480\text{ mm})^2 + (510\text{ mm})^2 + (320\text{ mm})^2} = 770\text{ mm}$$

$$\mathbf{F}_{BD} = T_{BD}\boldsymbol{\lambda}_{BD} = T_{BD}\frac{\overrightarrow{BD}}{BD}$$

$$= \frac{(385\text{ N})}{(770\text{ mm})}[-(480\text{ mm})\mathbf{i} + (510\text{ mm})\mathbf{j} - (320\text{ mm})\mathbf{k}]$$

$$= -(240\text{ N})\mathbf{i} + (255\text{ N})\mathbf{j} - (160\text{ N})\mathbf{k}$$

$$\overrightarrow{BE} = -(270\text{ mm})\mathbf{i} + (400\text{ mm})\mathbf{j} - (600\text{ mm})\mathbf{k}$$

$$BE = \sqrt{(270\text{ mm})^2 + (400\text{ mm})^2 + (600\text{ mm})^2} = 770\text{ mm}$$

$$\mathbf{F}_{BE} = T_{BE}\boldsymbol{\lambda}_{BE} = T_{BE}\frac{\overrightarrow{BE}}{BE}$$

$$= \frac{(385\text{ N})}{(770\text{ mm})}[-(270\text{ mm})\mathbf{i} + (400\text{ mm})\mathbf{j} - (600\text{ mm})\mathbf{k}]$$

$$= -(135\text{ N})\mathbf{i} + (200\text{ N})\mathbf{j} - (300\text{ N})\mathbf{k}$$

$$\mathbf{R} = \mathbf{F}_{BD} + \mathbf{F}_{BE} = -(375\text{ N})\mathbf{i} + (455\text{ N})\mathbf{j} - (460\text{ N})\mathbf{k}$$

$$R = \sqrt{(375\text{ N})^2 + (455\text{ N})^2 + (460\text{ N})^2} = 747.83\text{ N} \qquad R = 748\text{ N} \blacktriangleleft$$

$$\cos\theta_x = \frac{-375\text{ N}}{747.83\text{ N}} \qquad \theta_x = 120.1° \blacktriangleleft$$

$$\cos\theta_y = \frac{455\text{ N}}{747.83\text{ N}} \qquad \theta_y = 52.5° \blacktriangleleft$$

$$\cos\theta_z = \frac{-460\text{ N}}{747.83\text{ N}} \qquad \theta_z = 128.0° \blacktriangleleft$$

Copyright © McGraw-Hill Education. All rights reserved. No reproduction or distribution without the prior written consent of McGraw-Hill Education.

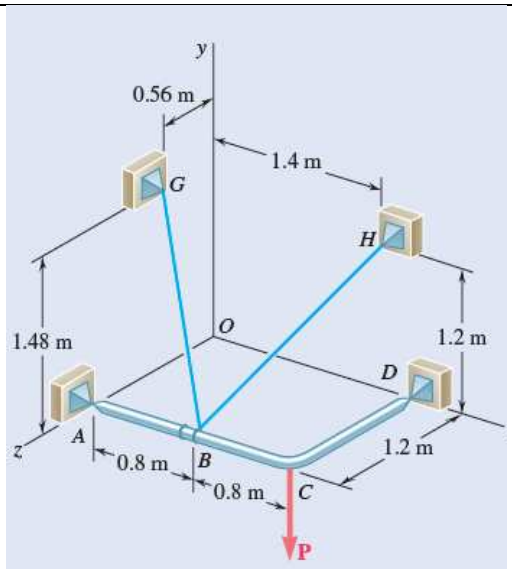

PROBLEM 2.77
For the frame of Prob. 2.68, determine the magnitude and direction of the resultant of the forces exerted by the cables at *B* knowing that the tension is 540 N in cable *BG* and 750 N in cable *BH*.

PROBLEM 2.68 Two cables BG and BH are attached to frame ACD as shown. Knowing that the tension in cable BG is 540 N, determine the components of the force exerted by cable BG on the frame at B.

SOLUTION

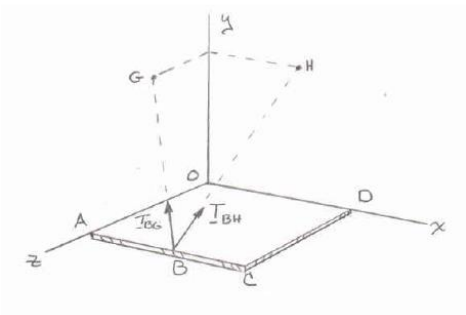

$$\overrightarrow{BG} = -(0.8\text{ m})\mathbf{i} + (1.48\text{ m})\mathbf{j} - (0.64\text{ m})\mathbf{k}$$

$$BG = \sqrt{(-0.8\text{ m})^2 + (1.48\text{ m}^2) + (-0.64\text{ m})^2} = 1.8\text{ m}$$

$$\overrightarrow{BH} = (0.6\text{ m})\mathbf{i} + (1.2\text{ m})\mathbf{j} - (1.2\text{ m})\mathbf{k}$$

$$BH = \sqrt{(0.6\text{ m})^2 + (1.2\text{ m})^2 - (1.2\text{ m})^2} = 1.8\text{ m}$$

$$\mathbf{T}_{BG} = T_{BG}\boldsymbol{\lambda}_{BG}$$

$$= T_{BG}\frac{\overrightarrow{BG}}{BG} = \frac{540\text{ N}}{1.8\text{ m}}[(-0.8\text{ m})\mathbf{i} + (1.48\text{ m})\mathbf{j} + (-0.64\text{ m})\mathbf{k}]$$

$$= (-240\text{ N})\mathbf{i} + (444\text{ N})\mathbf{j} - (192.0\text{ N})\mathbf{k}$$

$$\mathbf{T}_{BH} = T_{BH}\boldsymbol{\lambda}_{BH}$$

$$= T_{BH}\frac{\overrightarrow{BH}}{BH} = \frac{750\text{ N}}{3\text{ m}}[\mathbf{i} + 2\mathbf{j} - 2\mathbf{k}]\text{ (m)}$$

$$\mathbf{T}_{BH} = (250\text{ N})\mathbf{i} + (500\text{ N})\mathbf{j} - (500\text{ N})\mathbf{k}$$

$$\mathbf{R} = \mathbf{T}_{BG} + \mathbf{T}_{BH} = (10\text{ N})\mathbf{i} + (944\text{ N})\mathbf{j} - (692\text{ N})\mathbf{k}$$

Then: $$R = \sqrt{\left(10^2 + 944^2 + (-692)^2\right)} = 1170.51\text{ N} \qquad R = 1171\text{ N} \blacktriangleleft$$

and $$\cos\theta_x = \frac{10\text{ N}}{1170.51\text{ N}} \qquad \theta_x = 89.5° \blacktriangleleft$$

$$\cos\theta_y = \frac{944\text{ N}}{1170.51\text{ N}} \qquad \theta_y = 36.2° \blacktriangleleft$$

$$\cos\theta_z = \frac{-692\text{ N}}{1170.51\text{ N}} \qquad \theta_z = 126.2° \blacktriangleleft$$

Copyright © McGraw-Hill Education. All rights reserved. No reproduction or distribution without the prior written consent of McGraw-Hill Education.

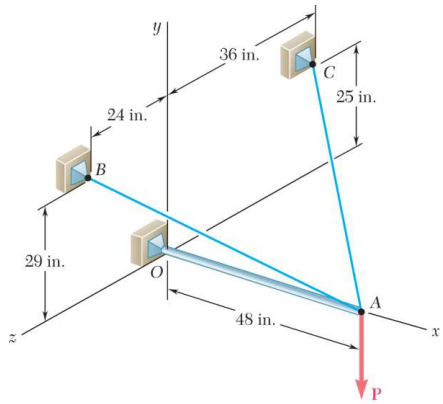

PROBLEM 2.78

The boom *OA* carries a load **P** and is supported by two cables as shown. Knowing that the tension in cable *AB* is 183 lb and that the resultant of the load **P** and of the forces exerted at *A* by the two cables must be directed along *OA*, determine the tension in cable *AC*.

SOLUTION

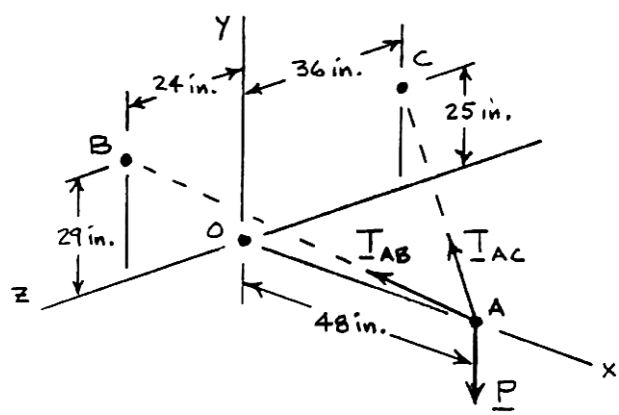

Cable *AB*: $T_{AB} = 183 \text{ lb}$

$$\mathbf{T}_{AB} = T_{AB}\boldsymbol{\lambda}_{AB} = T_{AB}\frac{\overrightarrow{AB}}{AB} = (183 \text{ lb})\frac{(-48 \text{ in.})\mathbf{i} + (29 \text{ in.})\mathbf{j} + (24 \text{ in.})\mathbf{k}}{61 \text{ in.}}$$

$$\mathbf{T}_{AB} = -(144 \text{ lb})\mathbf{i} + (87 \text{ lb})\mathbf{j} + (72 \text{ lb})\mathbf{k}$$

Cable *AC*:

$$\mathbf{T}_{AC} = T_{AC}\boldsymbol{\lambda}_{AC} = T_{AC}\frac{\overrightarrow{AC}}{AC} = T_{AC}\frac{(-48 \text{ in.})\mathbf{i} + (25 \text{ in.})\mathbf{j} + (-36 \text{ in.})\mathbf{k}}{65 \text{ in.}}$$

$$\mathbf{T}_{AC} = -\frac{48}{65}T_{AC}\mathbf{i} + \frac{25}{65}T_{AC}\mathbf{j} - \frac{36}{65}T_{AC}\mathbf{k}$$

Load *P*: $\mathbf{P} = P\mathbf{j}$

For resultant to be directed along *OA*, i.e., *x*-axis

$$R_z = 0: \quad \Sigma F_z = (72 \text{ lb}) - \frac{36}{65}T'_{AC} = 0 \qquad T_{AC} = 130.0 \text{ lb} \blacktriangleleft$$

Copyright © McGraw-Hill Education. All rights reserved. No reproduction or distribution without the prior written consent of McGraw-Hill Education.

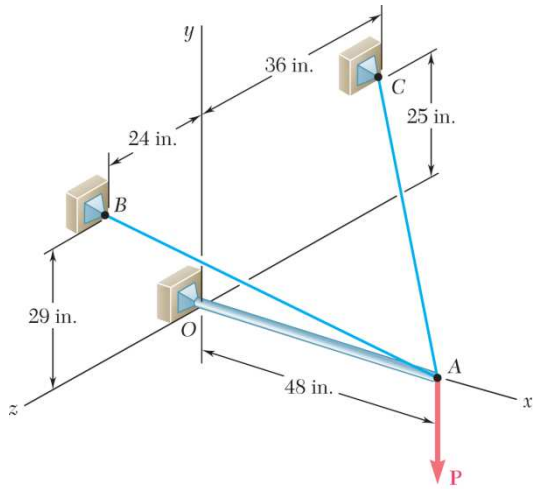

PROBLEM 2.79

For the boom and loading of Problem. 2.78, determine the magnitude of the load **P**.

PROBLEM 2.78 The boom *OA* carries a load **P** and is supported by two cables as shown. Knowing that the tension in cable *AB* is 183 lb and that the resultant of the load **P** and of the forces exerted at *A* by the two cables must be directed along *OA*, determine the tension in cable *AC*.

SOLUTION

See Problem 2.78. Since resultant must be directed along *OA*, i.e., the *x*-axis, we write

$$R_y = 0: \quad \Sigma F_y = (87 \text{ lb}) + \frac{25}{65} T_{AC} - P = 0$$

$T_{AC} = 130.0 \text{ lb}$ from Problem 2.78.

Then $$(87 \text{ lb}) + \frac{25}{65}(130.0 \text{ lb}) - P = 0 \qquad P = 137.0 \text{ lb} \blacktriangleleft$$

Copyright © McGraw-Hill Education. All rights reserved. No reproduction or distribution without the prior written consent of McGraw-Hill Education.

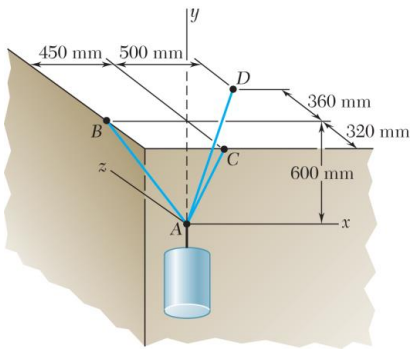

PROBLEM 2.80

A container is supported by three cables that are attached to a ceiling as shown. Determine the weight W of the container, knowing that the tension in cable AB is 6 kN.

SOLUTION

Free-Body Diagram at A:

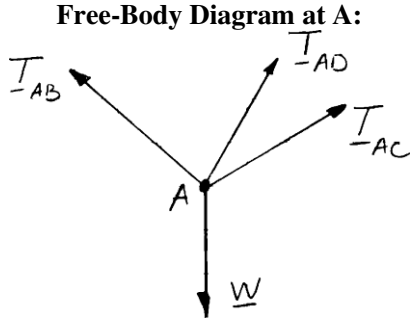

The forces applied at A are: $\mathbf{T}_{AB}, \mathbf{T}_{AC}, \mathbf{T}_{AD}$, and $\mathbf{W}$

where $\mathbf{W} = W\mathbf{j}$. To express the other forces in terms of the unit vectors $\mathbf{i}$, $\mathbf{j}$, $\mathbf{k}$, we write

$$\overrightarrow{AB} = -(450\text{ mm})\mathbf{i} + (600\text{ mm})\mathbf{j} \qquad AB = 750\text{ mm}$$

$$\overrightarrow{AC} = +(600\text{ mm})\mathbf{j} - (320\text{ mm})\mathbf{k} \qquad AC = 680\text{ mm}$$

$$\overrightarrow{AD} = +(500\text{ mm})\mathbf{i} + (600\text{ mm})\mathbf{j} + (360\text{ mm})\mathbf{k} \qquad AD = 860\text{ mm}$$

and

$$\mathbf{T}_{AB} = \boldsymbol{\lambda}_{AB}T_{AB} = T_{AB}\frac{\overrightarrow{AB}}{AB} = T_{AB}\frac{(-450\text{ mm})\mathbf{i} + (600\text{ mm})\mathbf{j}}{750\text{ mm}}$$

$$= \left(-\frac{45}{75}\mathbf{i} + \frac{60}{75}\mathbf{j}\right)T_{AB}$$

$$\mathbf{T}_{AC} = \boldsymbol{\lambda}_{AC}T_{AC} = T_{AC}\frac{\overrightarrow{AC}}{AC} = T_{AC}\frac{(600\text{ mm})\mathbf{i} - (320\text{ mm})\mathbf{j}}{680\text{ mm}}$$

$$= \left(\frac{60}{68}\mathbf{j} - \frac{32}{68}\mathbf{k}\right)T_{AC}$$

$$\mathbf{T}_{AD} = \boldsymbol{\lambda}_{AD}T_{AD} = T_{AD}\frac{\overrightarrow{AD}}{AD} = T_{AD}\frac{(500\text{ mm})\mathbf{i} + (600\text{ mm})\mathbf{j} + (360\text{ mm})\mathbf{k}}{860\text{ mm}}$$

$$= \left(\frac{50}{86}\mathbf{i} + \frac{60}{86}\mathbf{j} + \frac{36}{86}\mathbf{k}\right)T_{AD}$$

Copyright © McGraw-Hill Education. All rights reserved. No reproduction or distribution without the prior written consent of McGraw-Hill Education.

SOLUTION (Continued)

Equilibrium condition: $\Sigma F = 0: \quad \therefore \quad \mathbf{T}_{AB} + \mathbf{T}_{AC} + \mathbf{T}_{AD} + \mathbf{W} = 0$

Substituting the expressions obtained for $\mathbf{T}_{AB}$, $\mathbf{T}_{AC}$, and $\mathbf{T}_{AD}$; factoring **i**, **j**, and **k**; and equating each of the coefficients to zero gives the following equations:

From **i**: $$-\frac{45}{75}T_{AB} + \frac{50}{86}T_{AD} = 0 \qquad (1)$$

From **j**: $$\frac{60}{75}T_{AB} + \frac{60}{68}T_{AC} + \frac{60}{86}T_{AD} - W = 0 \qquad (2)$$

From **k**: $$-\frac{32}{68}T_{AC} + \frac{36}{86}T_{AD} = 0 \qquad (3)$$

Setting $T_{AB} = 6\text{ kN}$ in (1) and (2), and solving the resulting set of equations gives

$$T_{AC} = 6.1920\text{ kN}$$
$$T_{AC} = 5.5080\text{ kN} \qquad W = 13.98\text{ kN} \blacktriangleleft$$

Copyright © McGraw-Hill Education. All rights reserved. No reproduction or distribution without the prior written consent of McGraw-Hill Education.

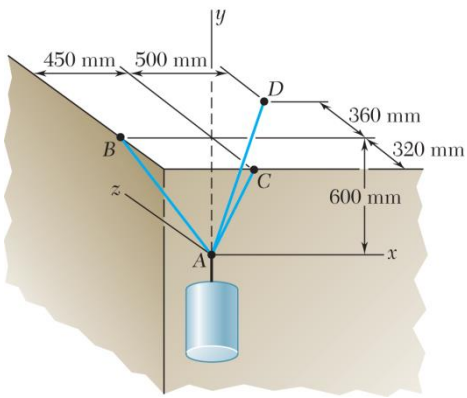

PROBLEM 2.81

A container is supported by three cables that are attached to a ceiling as shown. Determine the weight W of the container, knowing that the tension in cable AD is 4.3 kN.

SOLUTION

Free-Body Diagram at A:

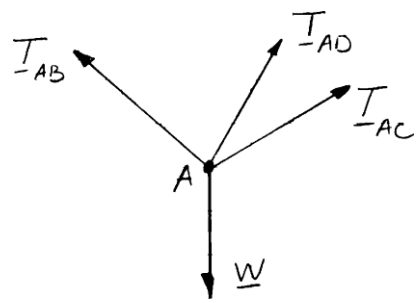

The forces applied at A are: $\mathbf{T}_{AB}, \mathbf{T}_{AC}, \mathbf{T}_{AD}$, and $\mathbf{W}$

where $\mathbf{W} = W\mathbf{j}$. To express the other forces in terms of the unit vectors **i**, **j**, **k**, we write

$$\overrightarrow{AB} = -(450\text{ mm})\mathbf{i} + (600\text{ mm})\mathbf{j} \qquad AB = 750\text{ mm}$$

$$\overrightarrow{AC} = +(600\text{ mm})\mathbf{j} - (320\text{ mm})\mathbf{k} \qquad AC = 680\text{ mm}$$

$$\overrightarrow{AD} = +(500\text{ mm})\mathbf{i} + (600\text{ mm})\mathbf{j} + (360\text{ mm})\mathbf{k} \qquad AD = 860\text{ mm}$$

and

$$\mathbf{T}_{AB} = \boldsymbol{\lambda}_{AB}T_{AB} = T_{AB}\frac{\overrightarrow{AB}}{AB} = T_{AB}\frac{(-450\text{ mm})\mathbf{i} + (600\text{ mm})\mathbf{j}}{750\text{ mm}}$$

$$= \left(-\frac{45}{75}\mathbf{i} + \frac{60}{75}\mathbf{j}\right)T_{AB}$$

$$\mathbf{T}_{AC} = \boldsymbol{\lambda}_{AC}T_{AC} = T_{AC}\frac{\overrightarrow{AC}}{AC} = T_{AC}\frac{(600\text{ mm})\mathbf{i} - (320\text{ mm})\mathbf{j}}{680\text{ mm}}$$

$$= \left(\frac{60}{68}\mathbf{j} - \frac{32}{68}\mathbf{k}\right)T_{AC}$$

$$\mathbf{T}_{AD} = \boldsymbol{\lambda}_{AD}T_{AD} = T_{AD}\frac{\overrightarrow{AD}}{AD} = T_{AD}\frac{(500\text{ mm})\mathbf{i} + (600\text{ mm})\mathbf{j} + (360\text{ mm})\mathbf{k}}{860\text{ mm}}$$

$$= \left(\frac{50}{86}\mathbf{i} + \frac{60}{86}\mathbf{j} + \frac{36}{86}\mathbf{k}\right)T_{AD}$$

Copyright © McGraw-Hill Education. All rights reserved. No reproduction or distribution without the prior written consent of McGraw-Hill Education.

PROBLEM 2.81 (Continued)

Equilibrium condition: $\Sigma F = 0: \quad \therefore \quad \mathbf{T}_{AB} + \mathbf{T}_{AC} + \mathbf{T}_{AD} + \mathbf{W} = 0$

Substituting the expressions obtained for $\mathbf{T}_{AB}$, $\mathbf{T}_{AC}$, and $\mathbf{T}_{AD}$; factoring **i**, **j**, and **k**; and equating each of the coefficients to zero gives the following equations:

From **i**: $$-\frac{45}{75}T_{AB} + \frac{50}{86}T_{AD} = 0$$

From **j**: $$\frac{60}{75}T_{AB} + \frac{60}{68}T_{AC} + \frac{60}{86}T_{AD} - W = 0$$

From **k**: $$-\frac{32}{68}T_{AC} + \frac{36}{86}T_{AD} = 0$$

Setting $T_{AD} = 4.3\text{ kN}$ into the above equations gives

$T_{AB} = 4.1667\text{ kN}$

$T_{AC} = 3.8250\text{ kN}$ $\qquad W = 9.71\text{ kN}$ ◀

Copyright © McGraw-Hill Education. All rights reserved. No reproduction or distribution without the prior written consent of McGraw-Hill Education.

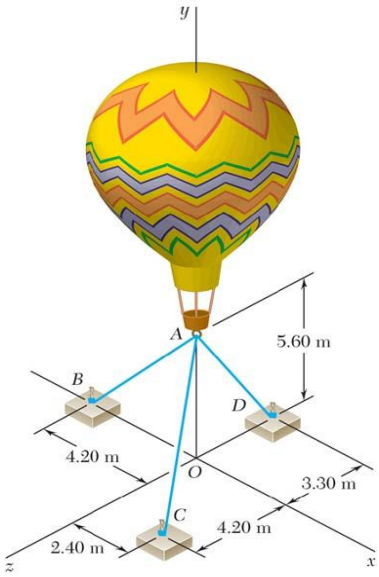

PROBLEM 2.82

Three cables are used to tether a balloon as shown. Knowing that the balloon exerts an 800-N vertical force at A, determine the tension in each cable.

SOLUTION

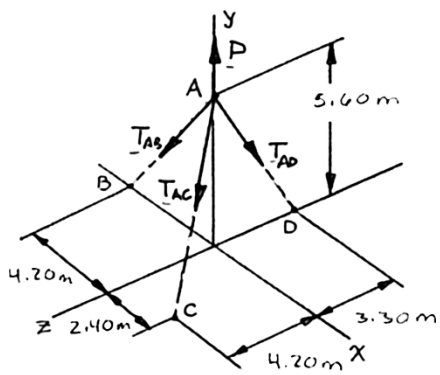

The forces applied at A are: $\mathbf{T}_{AB}, \mathbf{T}_{AC}, \mathbf{T}_{AD}$, and $\mathbf{P}$

where $\mathbf{P} = P\mathbf{j}$. To express the other forces in terms of the unit vectors $\mathbf{i}$, $\mathbf{j}$, $\mathbf{k}$, we write

$$\overrightarrow{AB} = -(4.20\text{ m})\mathbf{i} - (5.60\text{ m})\mathbf{j} \qquad AB = 7.00\text{ m}$$

$$\overrightarrow{AC} = (2.40\text{ m})\mathbf{i} - (5.60\text{ m})\mathbf{j} + (4.20\text{ m})\mathbf{k} \qquad AC = 7.40\text{ m}$$

$$\overrightarrow{AD} = -(5.60\text{ m})\mathbf{j} - (3.30\text{ m})\mathbf{k} \qquad AD = 6.50\text{ m}$$

and

$$\mathbf{T}_{AB} = T_{AB}\boldsymbol{\lambda}_{AB} = T_{AB}\frac{\overrightarrow{AB}}{AB} = (-0.6\mathbf{i} - 0.8\mathbf{j})T_{AB}$$

$$\mathbf{T}_{AC} = T_{AC}\boldsymbol{\lambda}_{AC} = T_{AC}\frac{\overrightarrow{AC}}{AC} = (0.32432 - 0.75676\mathbf{j} + 0.56757\mathbf{k})T_{AC}$$

$$\mathbf{T}_{AD} = T_{AD}\boldsymbol{\lambda}_{AD} = T_{AD}\frac{\overrightarrow{AD}}{AD} = (-0.86154\mathbf{j} - 0.50769\mathbf{k})T_{AD}$$

Copyright © McGraw-Hill Education. All rights reserved. No reproduction or distribution without the prior written consent of McGraw-Hill Education.

PROBLEM 2.82 (Continued)

Equilibrium condition $\Sigma F = 0: \quad \mathbf{T}_{AB} + \mathbf{T}_{AC} + \mathbf{T}_{AD} + P\mathbf{j} = 0$

Substituting the expressions obtained for $\mathbf{T}_{AB}$, $\mathbf{T}_{AC}$, and $\mathbf{T}_{AD}$ and factoring **i**, **j**, and **k**:

$$(-0.6T_{AB} + 0.32432T_{AC})\mathbf{i} + (-0.8T_{AB} - 0.75676T_{AC} - 0.86154T_{AD} + P)\mathbf{j}$$
$$+ (0.56757T_{AC} - 0.50769T_{AD})\mathbf{k} = 0$$

Equating to zero the coefficients of **i**, **j**, **k**:

$$-0.6T_{AB} + 0.32432T_{AC} = 0 \qquad (1)$$

$$-0.8T_{AB} - 0.75676T_{AC} - 0.86154T_{AD} + P = 0 \qquad (2)$$

$$0.56757T_{AC} - 0.50769T_{AD} = 0 \qquad (3)$$

From Eq. (1) $\quad T_{AB} = 0.54053T_{AC}$

From Eq. (3) $\quad T_{AD} = 1.11795T_{AC}$

Substituting for T_{AB} and T_{AD} in terms of T_{AC} into Eq. (2) gives:

$$-0.8(0.54053T_{AC}) - 0.75676T_{AC} - 0.86154(1.11795T_{AC}) + P = 0$$

$$2.1523T_{AC} = P; \quad P = 800 \text{ N}$$

$$T_{AC} = \frac{800 \text{ N}}{2.1523}$$
$$= 371.69 \text{ N}$$

Substituting into expressions for T_{AB} and T_{AD} gives:

$$T_{AB} = 0.54053(371.69 \text{ N})$$
$$T_{AD} = 1.11795(371.69 \text{ N})$$

$$T_{AB} = 201 \text{ N}, \quad T_{AC} = 372 \text{ N}, \quad T_{AD} = 416 \text{ N} \blacktriangleleft$$

Copyright © McGraw-Hill Education. All rights reserved. No reproduction or distribution without the prior written consent of McGraw-Hill Education.

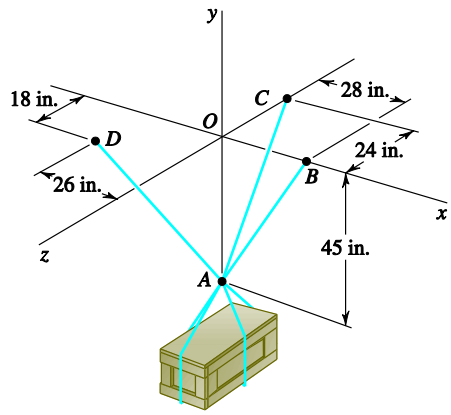

PROBLEM 2.83

A crate is supported by three cables as shown. Determine the weight W of the crate, knowing that the tension in cable AD is 924 lb.

SOLUTION

The forces applied at A are:

$$\mathbf{T}_{AB}, \mathbf{T}_{AC}, \mathbf{T}_{AD} \text{ and } \mathbf{W}$$

where $\mathbf{P} = P\mathbf{j}$. To express the other forces in terms of the unit vectors **i**, **j**, **k**, we write

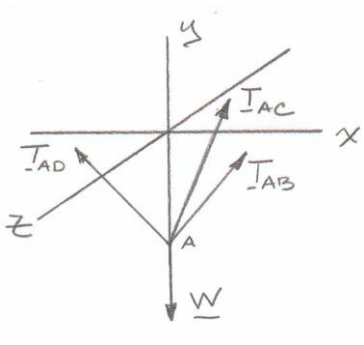

$$\overrightarrow{AB} = (28 \text{ in.})\mathbf{i} + (45 \text{ in.})\mathbf{j}$$
$$AB = 53 \text{ in.}$$
$$\overrightarrow{AC} = (45 \text{ in.})\mathbf{j} - (24 \text{ in.})\mathbf{k}$$
$$AC = 51 \text{ in.}$$
$$\overrightarrow{AD} = -(26 \text{ in.})\mathbf{i} + (45 \text{ in.})\mathbf{j} + (18 \text{ in.})\mathbf{k}$$
$$AD = 55 \text{ in.}$$

and

$$\mathbf{T}_{AB} = T_{AB}\boldsymbol{\lambda}_{AB} = T_{AB}\frac{\overrightarrow{AB}}{AB}$$
$$= (0.5283\mathbf{i} + 0.84906\mathbf{j})T_{AB}$$
$$\mathbf{T}_{AC} = T_{AC}\boldsymbol{\lambda}_{AC} = T_{AC}\frac{\overrightarrow{AC}}{AC}$$
$$= (0.88235\mathbf{j} - 0.47059\mathbf{k})T_{AC}$$
$$\mathbf{T}_{AD} = T_{AD}\boldsymbol{\lambda}_{AD} = T_{AD}\frac{\overrightarrow{AD}}{AD}$$
$$= (-0.47273\mathbf{i} + 0.81818\mathbf{j} + 0.32727\mathbf{k})T_{AD}$$

Copyright © McGraw-Hill Education. All rights reserved. No reproduction or distribution without the prior written consent of McGraw-Hill Education.

PROBLEM 2.83 (Continued)

Equilibrium Condition with $\mathbf{W} = -W\mathbf{j}$

$$\Sigma F = 0: \quad \mathbf{T}_{AB} + \mathbf{T}_{AC} + \mathbf{T}_{AD} - W\mathbf{j} = 0$$

Substituting the expressions obtained for $\mathbf{T}_{AB}$, $\mathbf{T}_{AC}$, and $\mathbf{T}_{AD}$ and factoring **i**, **j**, and **k**:

$$(0.5283T_{AB} - 0.47273T_{AD})\mathbf{i} + (0.84906T_{AB} + 0.88235T_{AC} + 0.81818T_{AD} - W)\mathbf{j}$$
$$+ (-0.47059T_{AC} + 0.32727T_{AD})\mathbf{k} = 0$$

Equating to zero the coefficients of **i**, **j**, **k**:

$$0.5283T_{AB} - 0.47273T_{AD} = 0 \quad (1)$$
$$0.84906T_{AB} + 0.88235T_{AC} + 0.81818T_{AD} - W = 0 \quad (2)$$
$$-0.47059T_{AC} + 0.32727T_{AD} = 0 \quad (3)$$

Substituting $T_{AB} = 1378 \text{ lb}$ in Equations (1), (2), and (3) above, and solving the resulting set of equations using conventional algorithms, gives:

$$T_{AD} = 1539.99 \text{ lb}$$
$$T_{AC} = 1070.98 \text{ lb}$$

$W = 3380 \text{ lb}$ ◀

Copyright © McGraw-Hill Education. All rights reserved. No reproduction or distribution without the prior written consent of McGraw-Hill Education.

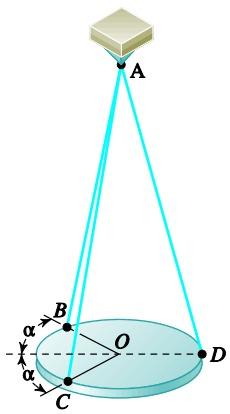

PROBLEM 2.84

A 12-lb circular plate of 7-in. radius is supported as shown by three wires, each of 25-in. length. Determine the tension in each wire, knowing that $\alpha = 30°$.

SOLUTION

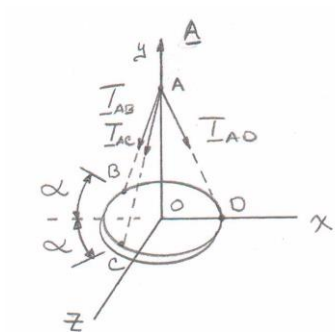

Let θ be angle between the vertical and any wire.

$$OA = \sqrt{\left(25^2 - 7^2\right)} = 24 \text{ in. thus } \cos\theta = \frac{24}{25}$$

By symmetry $T_{AB} = T_{AC}$

$\Sigma F_x = 0$:

$$-2(T_{AB}\sin\theta)(\cos\alpha) + T_{AD}(\sin\theta) = 0$$

For $\alpha = 30°$:

$$T_{AD} = 2\left(\cos 30°\right)T_{AB} = 1.73205T_{AB}$$

$\Sigma F_y = 0$: $\quad 12 \text{ lb} - 2T_{AB}(\cos\theta) - T_{AD}(\cos\theta) = 0$

or $\qquad 12 \text{ lb} = \left(2T_{AB} + T_{AD}\right)\cos\theta$

$$12 \text{ lb} = \left(2T_{AB} + 1.73205T_{AB}\right)\left(\frac{24}{25}\right)$$

$T_{AB} = T_{AC} = 3.35 \text{ lb}$ ◀

$T_{AD} = 5.80 \text{ lb}$ ◀

Copyright © McGraw-Hill Education. All rights reserved. No reproduction or distribution without the prior written consent of McGraw-Hill Education.

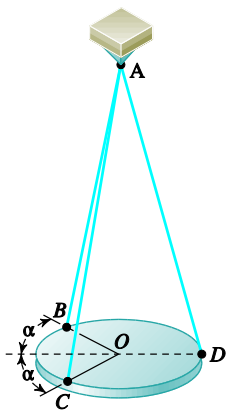

PROBLEM 2.85

Solve Prob. 2.84, knowing that $\alpha = 45°$.

PROBLEM 2.84 A 12-lb circular plate of 7-in. radius is supported as shown by three wires, each of 25-in. length. Determine the tension in each wire, knowing that $\alpha = 30°$.

SOLUTION

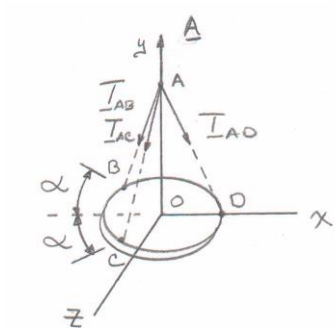

Let θ be angle between the vertical and any wire.

$$OA = \sqrt{\left(25^2 - 7^2\right)} = 24 \text{ in. thus } \cos\theta = \frac{24}{25}$$

By symmetry $T_{AB} = T_{AC}$

$\Sigma F_x = 0$:

$$-2(T_{AB}\sin\theta)(\cos\alpha) + T_{AD}(\sin\theta) = 0$$

For $\alpha = 45°$:

$$T_{AD} = 2\left(\cos 45°\right)T_{AB} = 1.41421T_{AB}$$

$\Sigma F_y = 0$: $\quad 12 \text{ lb} - 2T_{AB}(\cos\theta) - T_{AD}(\cos\theta) = 0$

or $\qquad 12 \text{ lb} = \left(2T_{AB} + T_{AD}\right)\cos\theta$

$$12 \text{ lb} = \left(2T_{AB} + 1.41421T_{AB}\right)\left(\frac{24}{25}\right)$$

$T_{AB} = T_{AC} = 3.66 \text{ lb}$ ◀

$T_{AD} = 5.18 \text{ lb}$ ◀

Copyright © McGraw-Hill Education. All rights reserved. No reproduction or distribution without the prior written consent of McGraw-Hill Education.

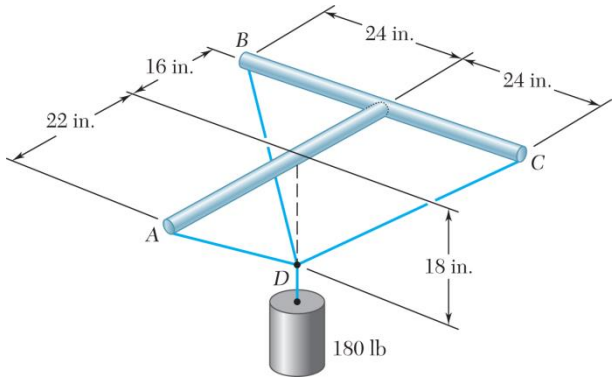

PROBLEM 2.86

Three wires are connected at point *D*, which is located 18 in. below the T-shaped pipe support *ABC*. Determine the tension in each wire when a 180-lb cylinder is suspended from point *D* as shown.

SOLUTION

Free-Body Diagram of Point *D*:

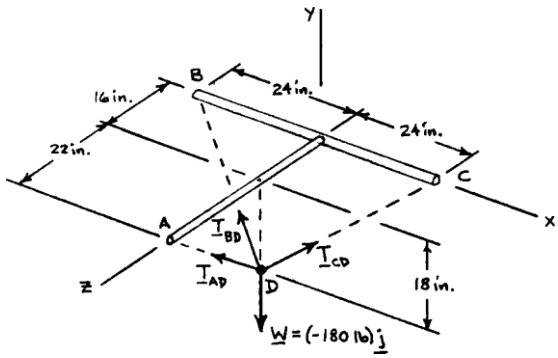

The forces applied at *D* are:

$$\mathbf{T}_{DA}, \mathbf{T}_{DB}, \mathbf{T}_{DC} \text{ and } \mathbf{W}$$

where $\mathbf{W} = -180.0 \text{ lb}\mathbf{j}$. To express the other forces in terms of the unit vectors **i**, **j**, **k**, we write

$$\overrightarrow{DA} = (18 \text{ in.})\mathbf{j} + (22 \text{ in.})\mathbf{k}$$
$$DA = 28.425 \text{ in.}$$
$$\overrightarrow{DB} = -(24 \text{ in.})\mathbf{i} + (18 \text{ in.})\mathbf{j} - (16 \text{ in.})\mathbf{k}$$
$$DB = 34.0 \text{ in.}$$
$$\overrightarrow{DC} = (24 \text{ in.})\mathbf{i} + (18 \text{ in.})\mathbf{j} - (16 \text{ in.})\mathbf{k}$$
$$DC = 34.0 \text{ in.}$$

Copyright © McGraw-Hill Education. All rights reserved. No reproduction or distribution without the prior written consent of McGraw-Hill Education.

SOLUTION (Continued)

and

$$\mathbf{T}_{DA} = T_{Da}\boldsymbol{\lambda}_{DA} = T_{Da}\frac{\overrightarrow{DA}}{DA}$$
$$= (0.63324\mathbf{j} + 0.77397\mathbf{k})T_{DA}$$
$$\mathbf{T}_{DB} = T_{DB}\boldsymbol{\lambda}_{DB} = T_{DB}\frac{\overrightarrow{DB}}{DB}$$
$$= (-0.70588\mathbf{i} + 0.52941\mathbf{j} - 0.47059\mathbf{k})T_{DB}$$
$$\mathbf{T}_{DC} = T_{DC}\boldsymbol{\lambda}_{DC} = T_{DC}\frac{\overrightarrow{DC}}{DC}$$
$$= (0.70588\mathbf{i} + 0.52941\mathbf{j} - 0.47059\mathbf{k})T_{DC}$$

Equilibrium Condition with $\mathbf{W} = -W\mathbf{j}$

$$\Sigma F = 0: \quad \mathbf{T}_{DA} + \mathbf{T}_{DB} + \mathbf{T}_{DC} - W\mathbf{j} = 0$$

Substituting the expressions obtained for $\mathbf{T}_{DA}$, $\mathbf{T}_{DB}$, and $\mathbf{T}_{DC}$ and factoring **i**, **j**, and **k**:

$$(-0.70588T_{DB} + 0.70588T_{DC})\mathbf{i}$$
$$(0.63324T_{DA} + 0.52941T_{DB} + 0.52941T_{DC} - W)\mathbf{j}$$
$$(0.77397T_{DA} - 0.47059T_{DB} - 0.47059T_{DC})\mathbf{k}$$

Equating to zero the coefficients of **i**, **j**, **k**:

$$-0.70588T_{DB} + 0.70588T_{DC} = 0 \qquad (1)$$

$$0.63324T_{DA} + 0.52941T_{DB} + 0.52941T_{DC} - W = 0 \qquad (2)$$

$$0.77397T_{DA} - 0.47059T_{DB} - 0.47059T_{DC} = 0 \qquad (3)$$

Substituting $W = 180$ lb in Equations (1), (2), and (3) above, and solving the resulting set of equations using conventional algorithms gives,

$T_{DA} = 119.7$ lb ◀

$T_{DB} = 98.4$ lb ◀

$T_{DC} = 98.4$ lb ◀

Copyright © McGraw-Hill Education. All rights reserved. No reproduction or distribution without the prior written consent of McGraw-Hill Education.

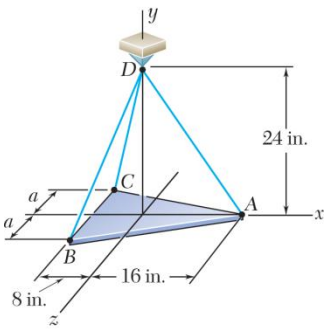

PROBLEM 2.87

A 36-lb triangular plate is supported by three wires as shown. Determine the tension in each wire, knowing that a = 6 in.

SOLUTION

By Symmetry $T_{DB} = T_{DC}$

Free-Body Diagram of Point *D*:

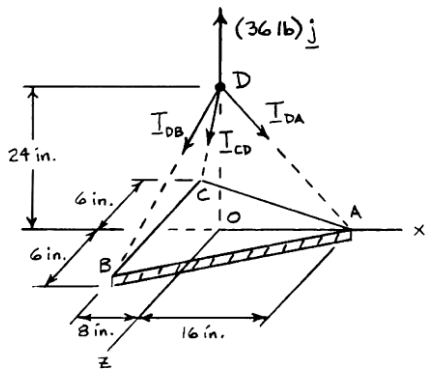

The forces applied at D are: $\mathbf{T}_{DB}, \mathbf{T}_{DC}, \mathbf{T}_{DA}$, and $\mathbf{P}$

where $\mathbf{P} = P\mathbf{j} = (36 \text{ lb})\mathbf{j}$. To express the other forces in terms of the unit vectors **i**, **j**, **k**, we write

$$\overrightarrow{DA} = (16 \text{ in.})\mathbf{i} - (24 \text{ in.})\mathbf{j} \qquad DA = 28.844 \text{ in.}$$

$$\overrightarrow{DB} = -(8 \text{ in.})\mathbf{i} - (24 \text{ in.})\mathbf{j} + (6 \text{ in.})\mathbf{k} \qquad DB = 26.0 \text{ in.}$$

$$\overrightarrow{DC} = -(8 \text{ in.})\mathbf{i} - (24 \text{ in.})\mathbf{j} - (6 \text{ in.})\mathbf{k} \qquad DC = 26.0 \text{ in.}$$

and

$$\mathbf{T}_{DA} = T_{DA}\boldsymbol{\lambda}_{DA} = T_{DA}\frac{\overrightarrow{DA}}{DA} = (0.55471\mathbf{i} - 0.83206\mathbf{j})T_{DA}$$

$$\mathbf{T}_{DB} = T_{DB}\boldsymbol{\lambda}_{DB} = T_{DB}\frac{\overrightarrow{DB}}{DB} = (-0.30769\mathbf{i} - 0.92308\mathbf{j} + 0.23077\mathbf{k})T_{DB}$$

$$\mathbf{T}_{DC} = T_{DC}\boldsymbol{\lambda}_{DC} = T_{DC}\frac{\overrightarrow{DC}}{DC} = (-0.30769\mathbf{i} - 0.92308\mathbf{j} - 0.23077\mathbf{k})T_{DC}$$

Copyright © McGraw-Hill Education. All rights reserved. No reproduction or distribution without the prior written consent of McGraw-Hill Education.

SOLUTION (Continued)

Equilibrium condition: $\Sigma F = 0$: $\mathbf{T}_{DA} + \mathbf{T}_{DB} + \mathbf{T}_{DC} + (36 \text{ lb})\mathbf{j} = 0$

Substituting the expressions obtained for $\mathbf{T}_{DA}$, $\mathbf{T}_{DB}$, and $\mathbf{T}_{DC}$ and factoring **i**, **j**, and **k**:

$$(0.55471T_{DA} - 0.30769T_{DB} - 0.30769T_{DC})\mathbf{i} + (-0.83206T_{DA} - 0.92308T_{DB} - 0.92308T_{DC} + 36 \text{ lb})\mathbf{j}$$
$$+ (0.23077T_{DB} - 0.23077T_{DC})\mathbf{k} = 0$$

Equating to zero the coefficients of **i**, **j**, **k**:

$$0.55471T_{DA} - 0.30769T_{DB} - 0.30769T_{DC} = 0 \quad (1)$$

$$-0.83206T_{DA} - 0.92308T_{DB} - 0.92308T_{DC} + 36 \text{ lb} = 0 \quad (2)$$

$$0.23077T_{DB} - 0.23077T_{DC} = 0 \quad (3)$$

Equation (3) confirms that $T_{DB} = T_{DC}$. Solving simultaneously gives,

$$T_{DA} = 14.42 \text{ lb}; \quad T_{DB} = T_{DC} = 13.00 \text{ lb} \blacktriangleleft$$

Copyright © McGraw-Hill Education. All rights reserved. No reproduction or distribution without the prior written consent of McGraw-Hill Education.

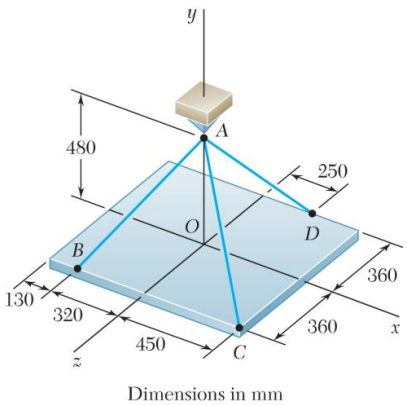

PROBLEM 2.88

A rectangular plate is supported by three cables as shown. Knowing that the tension in cable AC is 60 N, determine the weight of the plate.

SOLUTION

We note that the weight of the plate is equal in magnitude to the force **P** exerted by the support on Point A.

Free Body A:

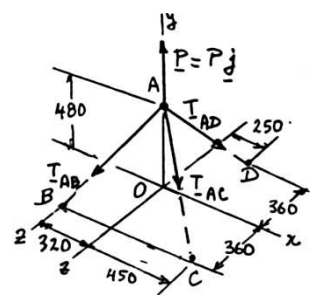

$$\Sigma F = 0: \quad \mathbf{T}_{AB} + \mathbf{T}_{AC} + \mathbf{T}_{AD} + P\mathbf{j} = 0$$

We have:

$$\overrightarrow{AB} = -(320\text{ mm})\mathbf{i} - (480\text{ mm})\mathbf{j} + (360\text{ mm})\mathbf{k} \qquad AB = 680\text{ mm}$$

$$\overrightarrow{AC} = (450\text{ mm})\mathbf{i} - (480\text{ mm})\mathbf{j} + (360\text{ mm})\mathbf{k} \qquad AC = 750\text{ mm}$$

$$\overrightarrow{AD} = (250\text{ mm})\mathbf{i} - (480\text{ mm})\mathbf{j} - (360\text{ mm})\mathbf{k} \qquad AD = 650\text{ mm}$$

Thus:

$$\mathbf{T}_{AB} = T_{AB}\boldsymbol{\lambda}_{AB} = T_{AB}\frac{\overrightarrow{AB}}{AB} = \left(-\frac{8}{17}\mathbf{i} - \frac{12}{17}\mathbf{j} + \frac{9}{17}\mathbf{k}\right)T_{AB}$$

$$\mathbf{T}_{AC} = T_{AC}\boldsymbol{\lambda}_{AC} = T_{AC}\frac{\overrightarrow{AC}}{AC} = (0.6\mathbf{i} - 0.64\mathbf{j} + 0.48\mathbf{k})T_{AC}$$

$$\mathbf{T}_{AD} = T_{AD}\boldsymbol{\lambda}_{AD} = T_{AD}\frac{\overrightarrow{AD}}{AD} = \left(\frac{5}{13}\mathbf{i} - \frac{9.6}{13}\mathbf{j} - \frac{7.2}{13}\mathbf{k}\right)T_{AD}$$

Substituting into the Eq. $\Sigma F = 0$ and factoring $\mathbf{i}, \mathbf{j}, \mathbf{k}$:

$$\left(-\frac{8}{17}T_{AB} + 0.6T_{AC} + \frac{5}{13}T_{AD}\right)\mathbf{i}$$
$$+\left(-\frac{12}{17}T_{AB} - 0.64T_{AC} - \frac{9.6}{13}T_{AD} + P\right)\mathbf{j}$$
$$+\left(\frac{9}{17}T_{AB} + 0.48T_{AC} - \frac{7.2}{13}T_{AD}\right)\mathbf{k} = 0$$

Copyright © McGraw-Hill Education. All rights reserved. No reproduction or distribution without the prior written consent of McGraw-Hill Education.

SOLUTION (Continued)

Setting the coefficient of **i**, **j**, **k** equal to zero:

$$\mathbf{i}: \quad -\frac{8}{17}T_{AB} + 0.6T_{AC} + \frac{5}{13}T_{AD} = 0 \tag{1}$$

$$\mathbf{j}: \quad -\frac{12}{7}T_{AB} - 0.64T_{AC} - \frac{9.6}{13}T_{AD} + P = 0 \tag{2}$$

$$\mathbf{k}: \quad \frac{9}{17}T_{AB} + 0.48T_{AC} - \frac{7.2}{13}T_{AD} = 0 \tag{3}$$

Making $T_{AC} = 60\text{ N}$ in (1) and (3):

$$-\frac{8}{17}T_{AB} + 36\text{ N} + \frac{5}{13}T_{AD} = 0 \tag{1'}$$

$$\frac{9}{17}T_{AB} + 28.8\text{ N} - \frac{7.2}{13}T_{AD} = 0 \tag{3'}$$

Multiply (1′) by 9, (3′) by 8, and add:

$$554.4\text{ N} - \frac{12.6}{13}T_{AD} = 0 \quad T_{AD} = 572.0\text{ N}$$

Substitute into (1′) and solve for T_{AB}:

$$T_{AB} = \frac{17}{8}\left(36 + \frac{5}{13} \times 572\right) \qquad T_{AB} = 544.0\text{ N}$$

Substitute for the tensions in Eq. (2) and solve for P:

$$P = \frac{12}{17}(544\text{ N}) + 0.64(60\text{ N}) + \frac{9.6}{13}(572\text{ N})$$
$$= 844.8\text{ N}$$

Weight of plate $= P = 845\text{ N}$ ◀

Copyright © McGraw-Hill Education. All rights reserved. No reproduction or distribution without the prior written consent of McGraw-Hill Education.

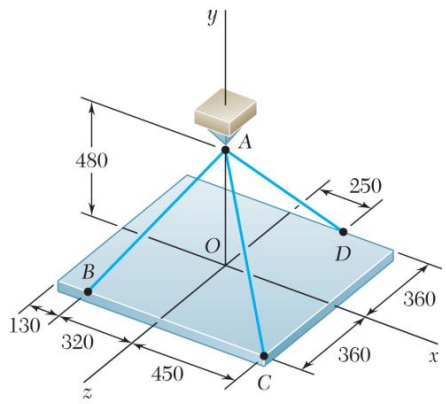

Dimensions in mm

PROBLEM 2.89

A rectangular plate is supported by three cables as shown. Knowing that the tension in cable *AD* is 520 N, determine the weight of the plate.

SOLUTION

See Problem 2.88 for the figure and the analysis leading to the linear algebraic Equations (1), (2), and (3) below:

$$-\frac{8}{17}T_{AB}+0.6T_{AC}+\frac{5}{13}T_{AD}=0 \qquad (1)$$

$$-\frac{12}{17}T_{AB}+0.64T_{AC}-\frac{9.6}{13}T_{AD}+P=0 \qquad (2)$$

$$\frac{9}{17}T_{AB}+0.48T_{AC}-\frac{7.2}{13}T_{AD}=0 \qquad (3)$$

Making $T_{AD}=520\text{ N}$ in Eqs. (1) and (3):

$$-\frac{8}{17}T_{AB}+0.6T_{AC}+200\text{ N}=0 \qquad (1')$$

$$\frac{9}{17}T_{AB}+0.48T_{AC}-288\text{ N}=0 \qquad (3')$$

Multiply (1′) by 9, (3′) by 8, and add:

$$9.24T_{AC}-504\text{ N}=0 \quad T_{AC}=54.5455\text{ N}$$

Substitute into (1′) and solve for T_{AB}:

$$T_{AB}=\frac{17}{8}(0.6\times 54.5455+200) \quad T_{AB}=494.545\text{ N}$$

Substitute for the tensions in Eq. (2) and solve for *P*:

$$P=\frac{12}{17}(494.545\text{ N})+0.64(54.5455\text{ N})+\frac{9.6}{13}(520\text{ N})$$
$$=768.00\text{ N}$$

Weight of plate $=P=768\text{ N}$ ◀

Copyright © McGraw-Hill Education. All rights reserved. No reproduction or distribution without the prior written consent of McGraw-Hill Education.

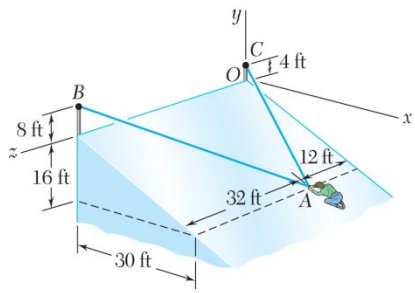

PROBLEM 2.90

In trying to move across a slippery icy surface, a 175-lb man uses two ropes *AB* and *AC*. Knowing that the force exerted on the man by the icy surface is perpendicular to that surface, determine the tension in each rope.

SOLUTION

Free-Body Diagram at *A*

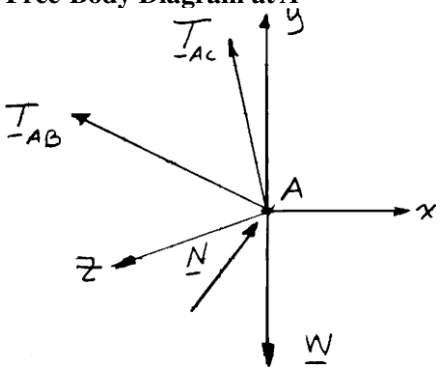

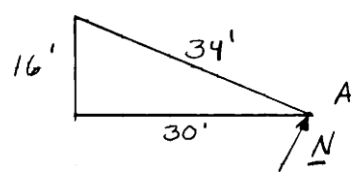

$$\mathbf{N} = N\left(\frac{16}{34}\mathbf{i} + \frac{30}{34}\mathbf{j}\right)$$

and $\mathbf{W} = W\,\mathbf{j} = -(175\text{ lb})\mathbf{j}$

$$\mathbf{T}_{AC} = T_{AC}\boldsymbol{\lambda}_{AC} = T_{AC}\frac{\overrightarrow{AC}}{AC} = T_{AC}\frac{(-30\text{ ft})\mathbf{i} + (20\text{ ft})\mathbf{j} - (12\text{ ft})\mathbf{k}}{38\text{ ft}}$$

$$= T_{AC}\left(-\frac{15}{19}\mathbf{i} + \frac{10}{19}\mathbf{j} - \frac{6}{19}\mathbf{k}\right)$$

$$\mathbf{T}_{AB} = T_{AB}\boldsymbol{\lambda}_{AB} = T_{AB}\frac{\overrightarrow{AB}}{AB} = T_{AB}\frac{(-30\text{ ft})\mathbf{i} + (24\text{ ft})\mathbf{j} + (32\text{ ft})\mathbf{k}}{50\text{ ft}}$$

$$= T_{AB}\left(-\frac{15}{25}\mathbf{i} + \frac{12}{25}\mathbf{j} + \frac{16}{25}\mathbf{k}\right)$$

Equilibrium condition: $\Sigma\mathbf{F} = 0$

$$\mathbf{T}_{AB} + \mathbf{T}_{AC} + \mathbf{N} + \mathbf{W} = 0$$

Copyright © McGraw-Hill Education. All rights reserved. No reproduction or distribution without the prior written consent of McGraw-Hill Education.

SOLUTION (Continued)

Substituting the expressions obtained for $\mathbf{T}_{AB}, \mathbf{T}_{AC}, \mathbf{N}$, and $\mathbf{W}$; factoring **i**, **j**, and **k**; and equating each of the coefficients to zero gives the following equations:

From **i**: $$-\frac{15}{25}T_{AB} - \frac{15}{19}T_{AC} + \frac{16}{34}N = 0 \qquad (1)$$

From **j**: $$\frac{12}{25}T_{AB} + \frac{10}{19}T_{AC} + \frac{30}{34}N - (175\text{ lb}) = 0 \qquad (2)$$

From **k**: $$\frac{16}{25}T_{AB} - \frac{6}{19}T_{AC} = 0 \qquad (3)$$

Solving the resulting set of equations gives:

$T_{AB} = 30.8\text{ lb};\ T_{AC} = 62.5\text{ lb}$ ◀

Copyright © McGraw-Hill Education. All rights reserved. No reproduction or distribution without the prior written consent of McGraw-Hill Education.

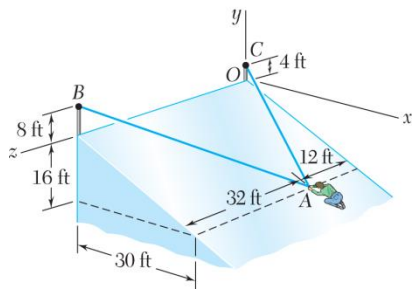

PROBLEM 2.91

Solve Problem 2.90, assuming that a friend is helping the man at A by pulling on him with a force $\mathbf{P} = -(45\text{ lb})\mathbf{k}$.

PROBLEM 2.90 In trying to move across a slippery icy surface, a 175-lb man uses two ropes AB and AC. Knowing that the force exerted on the man by the icy surface is perpendicular to that surface, determine the tension in each rope.

SOLUTION

Refer to Problem 2.90 for the figure and analysis leading to the following set of equations, Equation (3) being modified to include the additional force $\mathbf{P} = (-45\text{ lb})\mathbf{k}$.

$$-\frac{15}{25}T_{AB} - \frac{15}{19}T_{AC} + \frac{16}{34}N = 0 \qquad (1)$$

$$\frac{12}{25}T_{AB} + \frac{10}{19}T_{AC} + \frac{30}{34}N - (175\text{ lb}) = 0 \qquad (2)$$

$$\frac{16}{25}T_{AB} - \frac{6}{19}T_{AC} - (45\text{ lb}) = 0 \qquad (3)$$

Solving the resulting set of equations simultaneously gives:

$T_{AB} = 81.3\text{ lb}$ ◀

$T_{AC} = 22.2\text{ lb}$ ◀

Copyright © McGraw-Hill Education. All rights reserved. No reproduction or distribution without the prior written consent of McGraw-Hill Education.

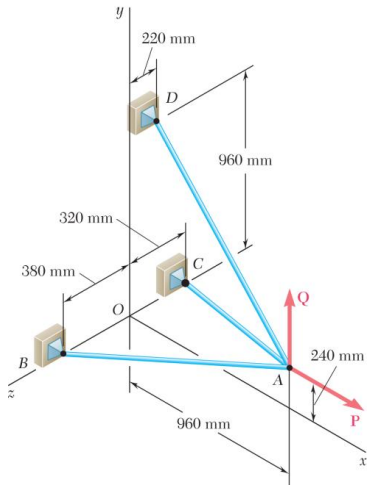

PROBLEM 2.92

Three cables are connected at A, where the forces **P** and **Q** are applied as shown. Knowing that $Q = 0$, find the value of P for which the tension in cable AD is 305 N.

SOLUTION

$$\Sigma \mathbf{F}_A = 0: \quad \mathbf{T}_{AB} + \mathbf{T}_{AC} + \mathbf{T}_{AD} + \mathbf{P} = 0 \quad \text{where} \quad \mathbf{P} = P\mathbf{i}$$

$$\overrightarrow{AB} = -(960\text{ mm})\mathbf{i} - (240\text{ mm})\mathbf{j} + (380\text{ mm})\mathbf{k} \qquad AB = 1060\text{ mm}$$

$$\overrightarrow{AC} = -(960\text{ mm})\mathbf{i} - (240\text{ mm})\mathbf{j} - (320\text{ mm})\mathbf{k} \qquad AC = 1040\text{ mm}$$

$$\overrightarrow{AD} = -(960\text{ mm})\mathbf{i} + (720\text{ mm})\mathbf{j} - (220\text{ mm})\mathbf{k} \qquad AD = 1220\text{ mm}$$

$$\mathbf{T}_{AB} = T_{AB}\boldsymbol{\lambda}_{AB} = T_{AB}\frac{\overrightarrow{AB}}{AB} = T_{AB}\left(-\frac{48}{53}\mathbf{i} - \frac{12}{53}\mathbf{j} + \frac{19}{53}\mathbf{k}\right)$$

$$\mathbf{T}_{AC} = T_{AC}\boldsymbol{\lambda}_{AC} = T_{AC}\frac{\overrightarrow{AC}}{AC} = T_{AC}\left(-\frac{12}{13}\mathbf{i} - \frac{3}{13}\mathbf{j} - \frac{4}{13}\mathbf{k}\right)$$

$$\mathbf{T}_{AD} = T_{AD}\boldsymbol{\lambda}_{AD} = \frac{305\text{ N}}{1220\text{ mm}}[(-960\text{ mm})\mathbf{i} + (720\text{ mm})\mathbf{j} - (220\text{ mm})\mathbf{k}]$$

$$= -(240\text{ N})\mathbf{i} + (180\text{ N})\mathbf{j} - (55\text{ N})\mathbf{k}$$

Substituting into $\Sigma \mathbf{F}_A = 0$, factoring **i**, **j**, **k**, and setting each coefficient equal to ϕ gives:

$$\mathbf{i}: \quad P = \frac{48}{53}T_{AB} + \frac{12}{13}T_{AC} + 240\text{ N} \qquad (1)$$

$$\mathbf{j}: \quad \frac{12}{53}T_{AB} + \frac{3}{13}T_{AC} = 180\text{ N} \qquad (2)$$

$$\mathbf{k}: \quad \frac{19}{53}T_{AB} - \frac{4}{13}T_{AC} = 55\text{ N} \qquad (3)$$

Solving the system of linear equations using conventional algorithms gives:

$$T_{AB} = 446.71\text{ N}$$

$$T_{AC} = 341.71\text{ N} \qquad P = 960\text{ N} \blacktriangleleft$$

Copyright © McGraw-Hill Education. All rights reserved. No reproduction or distribution without the prior written consent of McGraw-Hill Education.

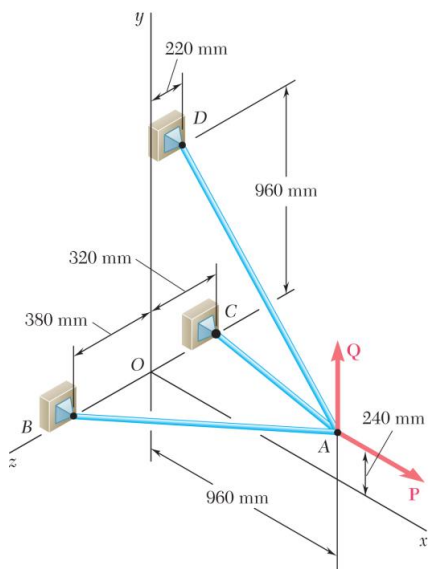

PROBLEM 2.93

Three cables are connected at A, where the forces **P** and **Q** are applied as shown. Knowing that $P = 1200$ N, determine the values of Q for which cable AD is taut.

SOLUTION

We assume that $T_{AD} = 0$ and write $\quad \Sigma \mathbf{F}_A = 0: \quad \mathbf{T}_{AB} + \mathbf{T}_{AC} + Q\mathbf{j} + (1200\text{ N})\mathbf{i} = 0$

$$\overrightarrow{AB} = -(960\text{ mm})\mathbf{i} - (240\text{ mm})\mathbf{j} + (380\text{ mm})\mathbf{k} \qquad AB = 1060\text{ mm}$$

$$\overrightarrow{AC} = -(960\text{ mm})\mathbf{i} - (240\text{ mm})\mathbf{j} - (320\text{ mm})\mathbf{k} \qquad AC = 1040\text{ mm}$$

$$\mathbf{T}_{AB} = T_{AB}\boldsymbol{\lambda}_{AB} = T_{AB}\frac{\overrightarrow{AB}}{AB} = \left(-\frac{48}{53}\mathbf{i} - \frac{12}{53}\mathbf{j} + \frac{19}{53}\mathbf{k}\right)T_{AB}$$

$$\mathbf{T}_{AC} = T_{AC}\boldsymbol{\lambda}_{AC} = T_{AC}\frac{\overrightarrow{AC}}{AC} = \left(-\frac{12}{13}\mathbf{i} - \frac{3}{13}\mathbf{j} - \frac{4}{13}\mathbf{k}\right)T_{AC}$$

Substituting into $\Sigma \mathbf{F}_A = 0$, factoring $\mathbf{i}, \mathbf{j}, \mathbf{k}$, and setting each coefficient equal to ϕ gives:

$$\mathbf{i}: \quad -\frac{48}{53}T_{AB} - \frac{12}{13}T_{AC} + 1200\text{ N} = 0 \qquad (1)$$

$$\mathbf{j}: \quad -\frac{12}{53}T_{AB} - \frac{3}{13}T_{AC} + Q = 0 \qquad (2)$$

$$\mathbf{k}: \quad \frac{19}{53}T_{AB} - \frac{4}{13}T_{AC} = 0 \qquad (3)$$

Solving the resulting system of linear equations using conventional algorithms gives:

$$T_{AB} = 605.71\text{ N}$$

$$T_{AC} = 705.71\text{ N}$$

$$Q = 300.00\text{ N} \qquad 0 \le Q < 300\text{ N} \blacktriangleleft$$

Note: This solution assumes that Q is directed upward as shown $(Q \ge 0)$, if negative values of Q are considered, cable AD remains taut, but AC becomes slack for $Q = -460$ N.

Copyright © McGraw-Hill Education. All rights reserved. No reproduction or distribution without the prior written consent of McGraw-Hill Education.

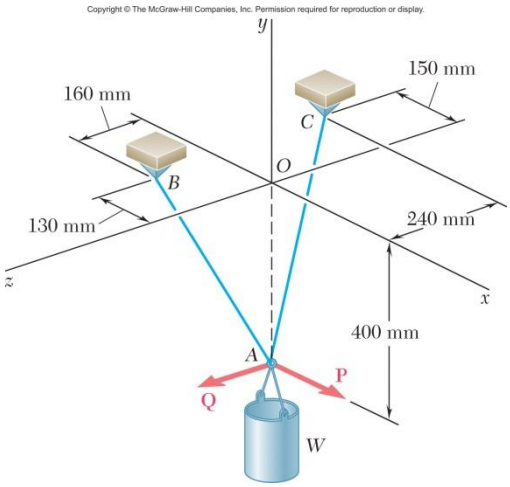

PROBLEM 2.94

A container of weight W is suspended from ring A. Cable BAC passes through the ring and is attached to fixed supports at B and C. Two forces $\mathbf{P} = P\mathbf{i}$ and $\mathbf{Q} = Q\mathbf{k}$ are applied to the ring to maintain the container in the position shown. Knowing that $W = 376$ N, determine P and Q. (*Hint:* The tension is the same in both portions of cable BAC.)

SOLUTION

$$\begin{aligned}\mathbf{T}_{AB} &= T\boldsymbol{\lambda}_{AB}\\ &= T\frac{\overrightarrow{AB}}{AB}\\ &= T\frac{(-130\text{ mm})\mathbf{i} + (400\text{ mm})\mathbf{j} + (160\text{ mm})\mathbf{k}}{450\text{ mm}}\\ &= T\left(-\frac{13}{45}\mathbf{i} + \frac{40}{45}\mathbf{j} + \frac{16}{45}\mathbf{k}\right)\end{aligned}$$

$$\begin{aligned}\mathbf{T}_{AC} &= T\boldsymbol{\lambda}_{AC}\\ &= T\frac{\overrightarrow{AC}}{AC}\\ &= T\frac{(-150\text{ mm})\mathbf{i} + (400\text{ mm})\mathbf{j} + (-240\text{ mm})\mathbf{k}}{490\text{ mm}}\\ &= T\left(-\frac{15}{49}\mathbf{i} + \frac{40}{49}\mathbf{j} - \frac{24}{49}\mathbf{k}\right)\end{aligned}$$

$$\Sigma F = 0: \quad \mathbf{T}_{AB} + \mathbf{T}_{AC} + \mathbf{Q} + \mathbf{P} + \mathbf{W} = 0$$

Free-Body *A*:

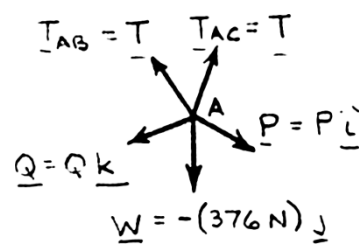

Setting coefficients of **i**, **j**, **k** equal to zero:

$$\mathbf{i}: \quad -\frac{13}{45}T - \frac{15}{49}T + P = 0 \qquad 0.59501T = P \tag{1}$$

$$\mathbf{j}: \quad +\frac{40}{45}T + \frac{40}{49}T - W = 0 \qquad 1.70521T = W \tag{2}$$

$$\mathbf{k}: \quad +\frac{16}{45}T - \frac{24}{49}T + Q = 0 \qquad 0.134240T = Q \tag{3}$$

Copyright © McGraw-Hill Education. All rights reserved. No reproduction or distribution without the prior written consent of McGraw-Hill Education.

PROBLEM 2.94 (Continued)

Data: $W = 376 \text{ N} \quad 1.70521T = 376 \text{ N} \quad T = 220.50 \text{ N}$

$0.59501(220.50 \text{ N}) = P$ $\qquad P = 131.2 \text{ N}$ ◀

$0.134240(220.50 \text{ N}) = Q$ $\qquad Q = 29.6 \text{ N}$ ◀

Copyright © McGraw-Hill Education. All rights reserved. No reproduction or distribution without the prior written consent of McGraw-Hill Education.

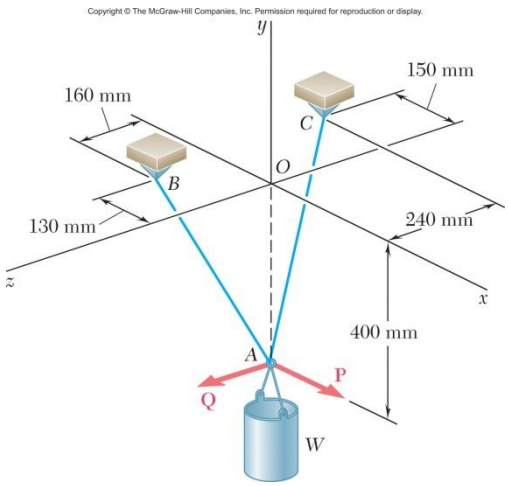

PROBLEM 2.95

For the system of Problem 2.94, determine W and Q knowing that $P = 164$ N.

PROBLEM 2.94 A container of weight W is suspended from ring A. Cable BAC passes through the ring and is attached to fixed supports at B and C. Two forces $\mathbf{P} = P\mathbf{i}$ and $\mathbf{Q} = Q\mathbf{k}$ are applied to the ring to maintain the container in the position shown. Knowing that $W = 376$ N, determine P and Q. (*Hint:* The tension is the same in both portions of cable BAC.)

SOLUTION

Refer to Problem 2.94 for the figure and analysis resulting in Equations (1), (2), and (3) for P, W, and Q in terms of T below. Setting $P = 164$ N we have:

Eq. (1):	$0.59501T = 164$ N	$T = 275.63$ N
Eq. (2):	$1.70521(275.63\text{ N}) = W$	$W = 470$ N ◀
Eq. (3):	$0.134240(275.63\text{ N}) = Q$	$Q = 37.0$ N ◀

Copyright © McGraw-Hill Education. All rights reserved. No reproduction or distribution without the prior written consent of McGraw-Hill Education.

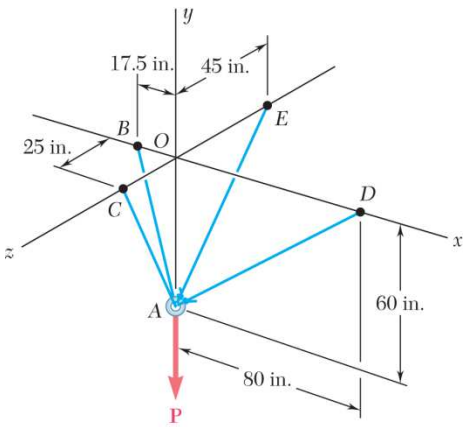

PROBLEM 2.96

Cable *BAC* passes through a frictionless ring *A* and is attached to fixed supports at *B* and *C*, while cables *AD* and *AE* are both tied to the ring and are attached, respectively, to supports at *D* and *E*. Knowing that a 200-lb vertical load **P** is applied to ring *A*, determine the tension in each of the three cables.

SOLUTION

Free Body Diagram at *A*:

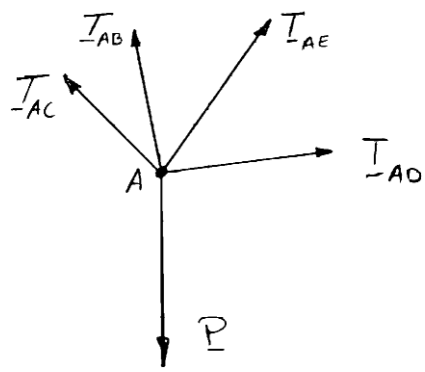

Since T_{BAC} = tension in cable *BAC*, it follows that

$$T_{AB} = T_{AC} = T_{BAC}$$

$$\mathbf{T}_{AB} = T_{BAC}\boldsymbol{\lambda}_{AB} = T_{BAC}\frac{(-17.5\text{ in.})\mathbf{i} + (60\text{ in.})\mathbf{j}}{62.5\text{ in.}} = T_{BAC}\left(\frac{-17.5}{62.5}\mathbf{i} + \frac{60}{62.5}\mathbf{j}\right)$$

$$\mathbf{T}_{AC} = T_{BAC}\boldsymbol{\lambda}_{AC} = T_{BAC}\frac{(60\text{ in.})\mathbf{i} + (25\text{ in.})\mathbf{k}}{65\text{ in.}} = T_{BAC}\left(\frac{60}{65}\mathbf{j} + \frac{25}{65}\mathbf{k}\right)$$

$$\mathbf{T}_{AD} = T_{AD}\boldsymbol{\lambda}_{AD} = T_{AD}\frac{(80\text{ in.})\mathbf{i} + (60\text{ in.})\mathbf{j}}{100\text{ in.}} = T_{AD}\left(\frac{4}{5}\mathbf{i} + \frac{3}{5}\mathbf{j}\right)$$

$$\mathbf{T}_{AE} = T_{AE}\boldsymbol{\lambda}_{AE} = T_{AE}\frac{(60\text{ in.})\mathbf{j} - (45\text{ in.})\mathbf{k}}{75\text{ in.}} = T_{AE}\left(\frac{4}{5}\mathbf{j} - \frac{3}{5}\mathbf{k}\right)$$

Copyright © McGraw-Hill Education. All rights reserved. No reproduction or distribution without the prior written consent of McGraw-Hill Education.

SOLUTION Continued

Substituting into $\Sigma \mathbf{F}_A = 0$, setting $\mathbf{P} = (-200\text{ lb})\mathbf{j}$, and setting the coefficients of **i**, **j**, **k** equal to ϕ, we obtain the following three equilibrium equations:

From $\mathbf{i}$: $$-\frac{17.5}{62.5}T_{BAC} + \frac{4}{5}T_{AD} = 0 \qquad (1)$$

From $\mathbf{j}$: $$\left(\frac{60}{62.5} + \frac{60}{65}\right)T_{BAC} + \frac{3}{5}T_{AD} + \frac{4}{5}T_{AE} - 200\text{ lb} = 0 \qquad (2)$$

From $\mathbf{k}$: $$\frac{25}{65}T_{BAC} - \frac{3}{5}T_{AE} = 0 \qquad (3)$$

Solving the system of linear equations using conventional algorithms gives:

$T_{BAC} = 76.7\text{ lb};\ T_{AD} = 26.9\text{ lb};\ T_{AE} = 49.2\text{ lb}$ ◀

Copyright © McGraw-Hill Education. All rights reserved. No reproduction or distribution without the prior written consent of McGraw-Hill Education.

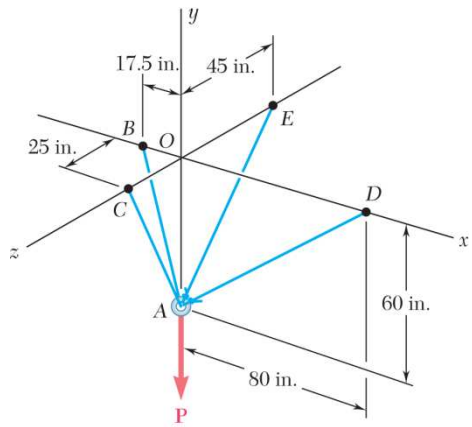

PROBLEM 2.97

Knowing that the tension in cable *AE* of Prob. 2.96 is 75 lb, determine (*a*) the magnitude of the load **P**, (*b*) the tension in cables *BAC* and *AD*.

PROBLEM 2.96 Cable *BAC* passes through a frictionless ring *A* and is attached to fixed supports at *B* and *C*, while cables *AD* and *AE* are both tied to the ring and are attached, respectively, to supports at *D* and *E*. Knowing that a 200-lb vertical load **P** is applied to ring *A*, determine the tension in each of the three cables.

SOLUTION

Refer to the solution to Problem 2.96 for the figure and analysis leading to the following set of equilibrium equations, Equation (2) being modified to include $P\mathbf{j}$ as an unknown quantity:

$$-\frac{17.5}{62.5}T_{BAC}+\frac{4}{5}T_{AD}=0 \qquad (1)$$

$$\left(\frac{60}{62.5}+\frac{60}{65}\right)T_{BAC}+\frac{3}{5}T_{AD}+\frac{4}{5}T_{AE}-P=0 \qquad (2)$$

$$\frac{25}{65}T_{BAC}-\frac{3}{5}T_{AE}=0 \qquad (3)$$

Substituting for $T_{AE}=75\text{ lb}$ and solving simultaneously gives:

(*a*) $P=305\text{ lb}$ ◀

(*b*) $T_{BAC}=117.0\text{ lb};\ T_{AD}=40.9\text{ lb}$ ◀

Copyright © McGraw-Hill Education. All rights reserved. No reproduction or distribution without the prior written consent of McGraw-Hill Education.

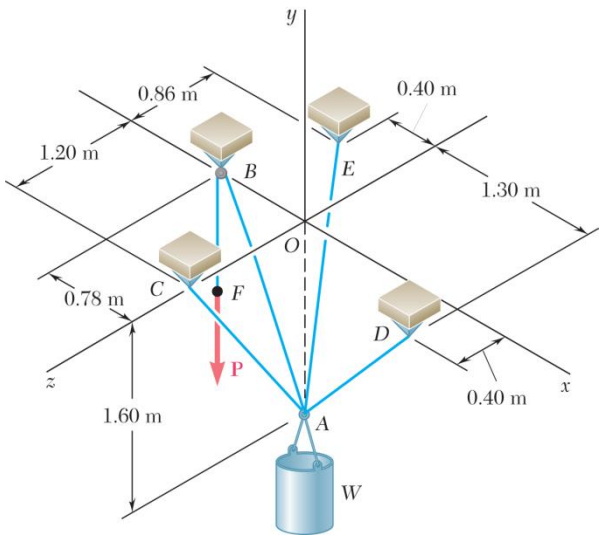

PROBLEM 2.98

A container of weight W is suspended from ring A, to which cables AC and AE are attached. A force $\mathbf{P}$ is applied to the end F of a third cable that passes over a pulley at B and through ring A and that is attached to a support at D. Knowing that $W = 1000\text{ N}$, determine the magnitude of P. (*Hint:* The tension is the same in all portions of cable $FBAD$.)

SOLUTION

The (vector) force in each cable can be written as the product of the (scalar) force and the unit vector along the cable. That is, with

$$\overrightarrow{AB} = -(0.78\text{ m})\mathbf{i} + (1.6\text{ m})\mathbf{j} + (0\text{ m})\mathbf{k}$$

$$AB = \sqrt{(-0.78\text{ m})^2 + (1.6\text{ m})^2 + (0)^2}$$

$$= 1.78\text{ m}$$

$$\mathbf{T}_{AB} = T\boldsymbol{\lambda}_{AB} = T_{AB}\frac{\overrightarrow{AB}}{AB}$$

$$= \frac{T_{AB}}{1.78\text{ m}}[-(0.78\text{ m})\mathbf{i} + (1.6\text{ m})\mathbf{j} + (0\text{ m})\mathbf{k}]$$

$$\mathbf{T}_{AB} = T_{AB}(-0.4382\mathbf{i} + 0.8989\mathbf{j} + 0\mathbf{k})$$

and

$$\overrightarrow{AC} = (0)\mathbf{i} + (1.6\text{ m})\mathbf{j} + (1.2\text{ m})\mathbf{k}$$

$$AC = \sqrt{(0\text{ m})^2 + (1.6\text{ m})^2 + (1.2\text{ m})^2} = 2\text{ m}$$

$$\mathbf{T}_{AC} = T\boldsymbol{\lambda}_{AC} = T_{AC}\frac{\overrightarrow{AC}}{AC} = \frac{T_{AC}}{2\text{ m}}[(0)\mathbf{i} + (1.6\text{ m})\mathbf{j} + (1.2\text{ m})\mathbf{k}]$$

$$\mathbf{T}_{AC} = T_{AC}(0.8\mathbf{j} + 0.6\mathbf{k})$$

and

$$\overrightarrow{AD} = (1.3\text{ m})\mathbf{i} + (1.6\text{ m})\mathbf{j} + (0.4\text{ m})\mathbf{k}$$

$$AD = \sqrt{(1.3\text{ m})^2 + (1.6\text{ m})^2 + (0.4\text{ m})^2} = 2.1\text{ m}$$

$$\mathbf{T}_{AD} = T\boldsymbol{\lambda}_{AD} = T_{AD}\frac{\overrightarrow{AD}}{AD} = \frac{T_{AD}}{2.1\text{ m}}[(1.3\text{ m})\mathbf{i} + (1.6\text{ m})\mathbf{j} + (0.4\text{ m})\mathbf{k}]$$

$$\mathbf{T}_{AD} = T_{AD}(0.6190\mathbf{i} + 0.7619\mathbf{j} + 0.1905\mathbf{k})$$

Copyright © McGraw-Hill Education. All rights reserved. No reproduction or distribution without the prior written consent of McGraw-Hill Education.

SOLUTION Continued

Finally,

$$\overrightarrow{AE} = -(0.4\text{ m})\mathbf{i} + (1.6\text{ m})\mathbf{j} - (0.86\text{ m})\mathbf{k}$$

$$AE = \sqrt{(-0.4\text{ m})^2 + (1.6\text{ m})^2 + (-0.86\text{ m})^2} = 1.86\text{ m}$$

$$\mathbf{T}_{AE} = T\boldsymbol{\lambda}_{AE} = T_{AE}\frac{\overrightarrow{AE}}{AE}$$

$$= \frac{T_{AE}}{1.86\text{ m}}[-(0.4\text{ m})\mathbf{i} + (1.6\text{ m})\mathbf{j} - (0.86\text{ m})\mathbf{k}]$$

$$\mathbf{T}_{AE} = T_{AE}(-0.2151\mathbf{i} + 0.8602\mathbf{j} - 0.4624\mathbf{k})$$

With the weight of the container $\mathbf{W} = -W\mathbf{j}$, at A we have:

$$\Sigma\mathbf{F} = 0: \quad \mathbf{T}_{AB} + \mathbf{T}_{AC} + \mathbf{T}_{AD} - W\mathbf{j} = 0$$

Equating the factors of **i**, **j**, and **k** to zero, we obtain the following linear algebraic equations:

$$-0.4382T_{AB} + 0.6190T_{AD} - 0.2151T_{AE} = 0 \qquad (1)$$

$$0.8989T_{AB} + 0.8T_{AC} + 0.7619T_{AD} + 0.8602T_{AE} - W = 0 \qquad (2)$$

$$0.6T_{AC} + 0.1905T_{AD} - 0.4624T_{AE} = 0 \qquad (3)$$

Knowing that $W = 1000\text{ N}$ and that because of the pulley system at B $T_{AB} = T_{AD} = P$, where P is the externally applied (unknown) force, we can solve the system of linear Equations (1), (2) and (3) uniquely for P.

$P = 378\text{ N}$ ◀

Copyright © McGraw-Hill Education. All rights reserved. No reproduction or distribution without the prior written consent of McGraw-Hill Education.

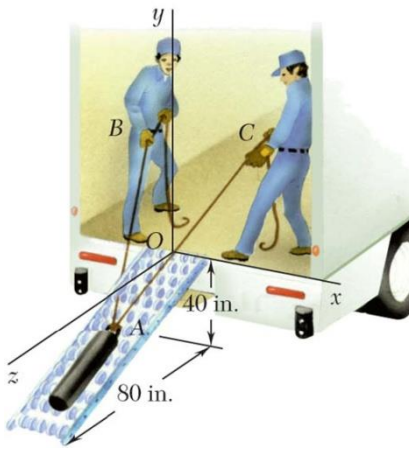

PROBLEM 2.99

Using two ropes and a roller chute, two workers are unloading a 200-lb cast-iron counterweight from a truck. Knowing that at the instant shown the counterweight is kept from moving and that the positions of Points *A*, *B*, and *C* are, respectively, *A*(0, –20 in., 40 in.), *B*(–40 in., 50 in., 0), and *C*(45 in., 40 in., 0), and assuming that no friction exists between the counterweight and the chute, determine the tension in each rope. (*Hint*: Since there is no friction, the force exerted by the chute on the counterweight must be perpendicular to the chute.)

SOLUTION

From the geometry of the chute:

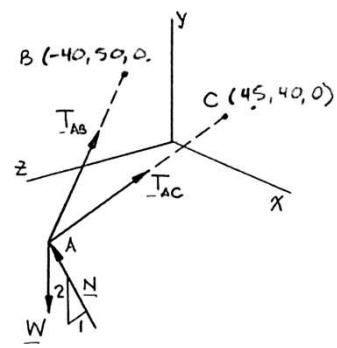

$$\mathbf{N} = \frac{N}{\sqrt{5}}(2\mathbf{j}+\mathbf{k})$$
$$= N(0.8944\mathbf{j}+0.4472\mathbf{k})$$

The force in each rope can be written as the product of the magnitude of the force and the unit vector along the cable. Thus, with

$$\overrightarrow{AB} = (40\text{ in.})\mathbf{i} + (70\text{ in.})\mathbf{j} - (40\text{ in.})\mathbf{k}$$
$$AB = \sqrt{(40\text{ in.})^2 + (70\text{ in.})^2 + (40\text{ in.})^2}$$
$$= 90\text{ in.}$$
$$\mathbf{T}_{AB} = T\boldsymbol{\lambda}_{AB} = T_{AB}\frac{\overrightarrow{AB}}{AB}$$
$$= \frac{T_{AB}}{90\text{ in.}}[(-40\text{ in.})\mathbf{i} + (70\text{ in.})\mathbf{j} - (40\text{ in.})\mathbf{k}]$$
$$\mathbf{T}_{AB} = T_{AB}\left(-\frac{4}{9}\mathbf{i} + \frac{7}{9}\mathbf{j} - \frac{4}{9}\mathbf{k}\right)$$

and

$$\overrightarrow{AC} = (45\text{ in.})\mathbf{i} + (60\text{ in.})\mathbf{j} - (40\text{ in.})\mathbf{k}$$
$$AC = \sqrt{(45\text{ in.})^2 + (60\text{ in.})^2 + (40\text{ in.})^2} = 85\text{ in.}$$
$$\mathbf{T}_{AC} = T\boldsymbol{\lambda}_{AC} = T_{AC}\frac{\overrightarrow{AC}}{AC}$$
$$= \frac{T_{AC}}{85\text{ in.}}[(45\text{ in.})\mathbf{i} + (60\text{ in.})\mathbf{j} - (40\text{ in.})\mathbf{k}]$$
$$\mathbf{T}_{AC} = T_{AC}\left(\frac{9}{17}\mathbf{i} + \frac{12}{17}\mathbf{j} - \frac{8}{17}\mathbf{k}\right)$$

Then: $\Sigma\mathbf{F} = 0: \quad \mathbf{N} + \mathbf{T}_{AB} + \mathbf{T}_{AC} + \mathbf{W} = 0$

Copyright © McGraw-Hill Education. All rights reserved. No reproduction or distribution without the prior written consent of McGraw-Hill Education.

SOLUTION Continued

With $W = 200$ lb, and equating the factors of **i**, **j**, and **k** to zero, we obtain the linear algebraic equations:

$$\mathbf{i}: \quad -\frac{4}{9}T_{AB} + \frac{9}{17}T_{AC} = 0 \tag{1}$$

$$\mathbf{j}: \quad \frac{7}{9}T_{AB} + \frac{12}{17}T_{AC} + \frac{2}{\sqrt{5}} - 200 \text{ lb} = 0 \tag{2}$$

$$\mathbf{k}: \quad -\frac{4}{9}T_{AB} - \frac{8}{17}T_{AC} + \frac{1}{\sqrt{5}}N = 0 \tag{3}$$

Using conventional methods for solving linear algebraic equations we obtain:

$T_{AB} = 65.6$ lb ◀

$T_{AC} = 55.1$ lb ◀

Copyright © McGraw-Hill Education. All rights reserved. No reproduction or distribution without the prior written consent of McGraw-Hill Education.

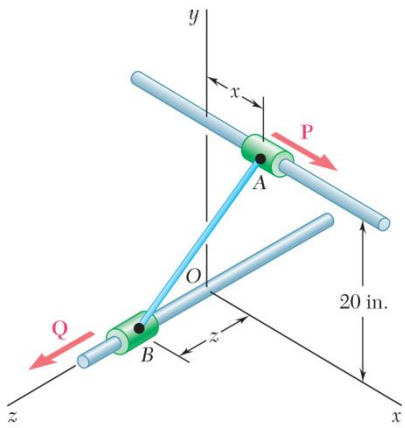

PROBLEM 2.100

Collars A and B are connected by a 25-in.-long wire and can slide freely on frictionless rods. If a 60-lb force **Q** is applied to collar B as shown, determine (a) the tension in the wire when $x = 9$ in., (b) the corresponding magnitude of the force **P** required to maintain the equilibrium of the system.

SOLUTION

Free-Body Diagrams of Collars:

***A*:**

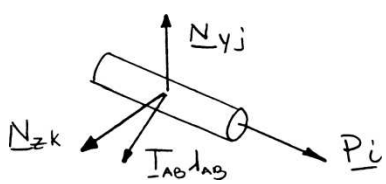

***B*:**

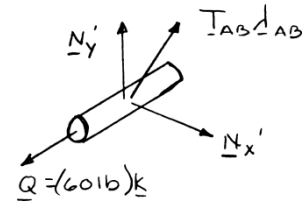

$$\boldsymbol{\lambda}_{AB} = \frac{\overrightarrow{AB}}{AB} = \frac{-x\mathbf{i} - (20\text{ in.})\mathbf{j} + z\mathbf{k}}{25\text{ in.}}$$

Collar A: $\quad \Sigma\mathbf{F} = 0: \quad P\mathbf{i} + N_y\mathbf{j} + N_z\mathbf{k} + T_{AB}\boldsymbol{\lambda}_{AB} = 0$

Substitute for $\boldsymbol{\lambda}_{AB}$ and set coefficient of **i** equal to zero:

$$P - \frac{T_{AB}x}{25\text{ in.}} = 0 \qquad (1)$$

Collar B: $\quad \Sigma\mathbf{F} = 0: \quad (60\text{ lb})\mathbf{k} + N'_x\mathbf{i} + N'_y\mathbf{j} - T_{AB}\boldsymbol{\lambda}_{AB} = 0$

Substitute for $\boldsymbol{\lambda}_{AB}$ and set coefficient of **k** equal to zero:

$$60\text{ lb} - \frac{T_{AB}z}{25\text{ in.}} = 0 \qquad (2)$$

(a) $\quad x = 9$ in. $\quad (9\text{ in.})^2 + (20\text{ in.})^2 + z^2 = (25\text{ in.})^2$

$$z = 12\text{ in.}$$

From Eq. (2): $\quad \dfrac{60\text{ lb} - T_{AB}(12\text{ in.})}{25\text{ in.}} \qquad T_{AB} = 125.0\text{ lb} \blacktriangleleft$

(b) From Eq. (1): $\quad P = \dfrac{(125.0\text{ lb})(9\text{ in.})}{25\text{ in.}} \qquad P = 45.0\text{ lb} \blacktriangleleft$

Copyright © McGraw-Hill Education. All rights reserved. No reproduction or distribution without the prior written consent of McGraw-Hill Education.

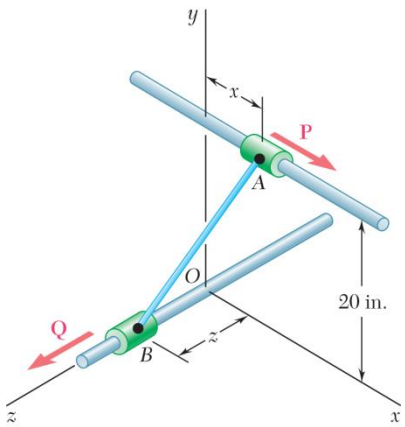

PROBLEM 2.101

Collars A and B are connected by a 25-in.-long wire and can slide freely on frictionless rods. Determine the distances x and z for which the equilibrium of the system is maintained when $P = 120$ lb and $Q = 60$ lb.

SOLUTION

See Problem 2.100 for the diagrams and analysis leading to Equations (1) and (2) below:

$$P = \frac{T_{AB}x}{25 \text{ in.}} = 0 \qquad (1)$$

$$60 \text{ lb} - \frac{T_{AB}z}{25 \text{ in.}} = 0 \qquad (2)$$

For $P = 120$ lb, Eq. (1) yields $\quad T_{AB}x = (25 \text{ in.})(20 \text{ lb}) \qquad (1')$

From Eq. (2): $\quad T_{AB}z = (25 \text{ in.})(60 \text{ lb}) \qquad (2')$

Dividing Eq. (1′) by (2′), $\quad \dfrac{x}{z} = 2 \qquad (3)$

Now write $\quad x^2 + z^2 + (20 \text{ in.})^2 = (25 \text{ in.})^2 \qquad (4)$

Solving (3) and (4) simultaneously,

$$4z^2 + z^2 + 400 = 625$$

$$z^2 = 45$$

$$z = 6.7082 \text{ in.}$$

From Eq. (3): $\quad x = 2z = 2(6.7082 \text{ in.})$

$$= 13.4164 \text{ in.}$$

$x = 13.42$ in., $\quad z = 6.71$ in. ◀

Copyright © McGraw-Hill Education. All rights reserved. No reproduction or distribution without the prior written consent of McGraw-Hill Education.

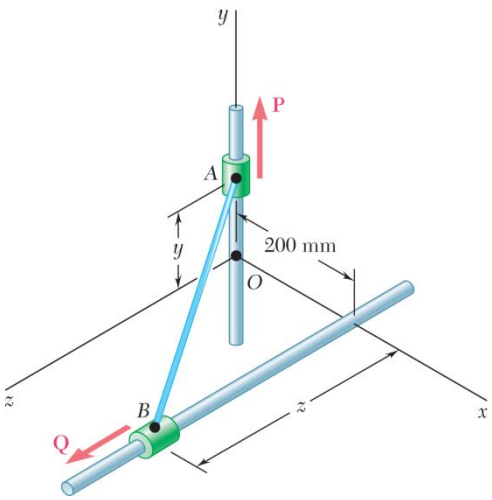

PROBLEM 2.102

Collars A and B are connected by a 525-mm-long wire and can slide freely on frictionless rods. If a force $\mathbf{P} = (341\text{ N})\mathbf{j}$ is applied to collar A, determine (a) the tension in the wire when $y = 155$ mm, (b) the magnitude of the force $\mathbf{Q}$ required to maintain the equilibrium of the system.

SOLUTION

For both Problems 2.102 and 2.103:

$$(AB)^2 = x^2 + y^2 + z^2$$

Here $$(0.525\text{ m})^2 = (0.20\text{ m})^2 + y^2 + z^2$$

or $$y^2 + z^2 = 0.23563\text{ m}^2$$

Thus, when y given, z is determined,

Now
$$\boldsymbol{\lambda}_{AB} = \frac{\overrightarrow{AB}}{AB} = \frac{1}{0.525\text{ m}}(0.20\mathbf{i} - y\mathbf{j} + z\mathbf{k})\text{m} = 0.38095\mathbf{i} - 1.90476y\mathbf{j} + 1.90476z\mathbf{k}$$

Free-Body Diagrams of Collars:

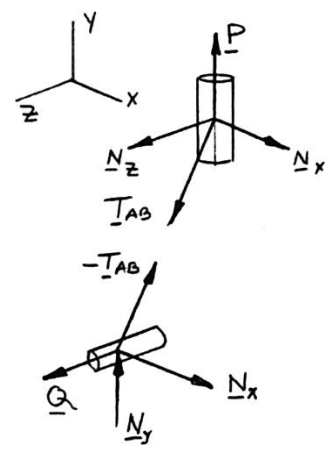

Where y and z are in units of meters, m.

From the F.B. Diagram of collar A: $\Sigma\mathbf{F} = 0$: $N_x\mathbf{i} + N_z\mathbf{k} + P\mathbf{j} + T_{AB}\lambda_{AB} = 0$

Setting the **j** coefficient to zero gives $P - (1.90476y)T_{AB} = 0$

With $$P = 341\text{ N}$$
$$T_{AB} = \frac{341\text{ N}}{1.90476y}$$

Now, from the free body diagram of collar B: $\Sigma\mathbf{F} = 0$: $N_x\mathbf{i} + N_y\mathbf{j} + Q\mathbf{k} - T_{AB}\boldsymbol{\lambda}_{AB} = 0$

Setting the **k** coefficient to zero gives $Q - T_{AB}(1.90476z) = 0$

And using the above result for T_{AB}, we have $$Q = T_{AB}z = \frac{341\text{ N}}{(1.90476)y}(1.90476z) = \frac{(341\text{ N})(z)}{y}$$

Copyright © McGraw-Hill Education. All rights reserved. No reproduction or distribution without the prior written consent of McGraw-Hill Education.

SOLUTION Continued

Then from the specifications of the problem, $y = 155 \text{ mm} = 0.155 \text{ m}$

$$z^2 = 0.23563 \text{ m}^2 - (0.155 \text{ m})^2$$
$$z = 0.46 \text{ m}$$

and

(*a*)
$$T_{AB} = \frac{341 \text{ N}}{0.155(1.90476)}$$
$$= 1155.00 \text{ N}$$

or $T_{AB} = 1155 \text{ N}$ ◀

and

(*b*)
$$Q = \frac{341 \text{ N}(0.46 \text{ m})(0.866)}{(0.155 \text{ m})}$$
$$= (1012.00 \text{ N})$$

or $Q = 1012 \text{ N}$ ◀

Copyright © McGraw-Hill Education. All rights reserved. No reproduction or distribution without the prior written consent of McGraw-Hill Education.

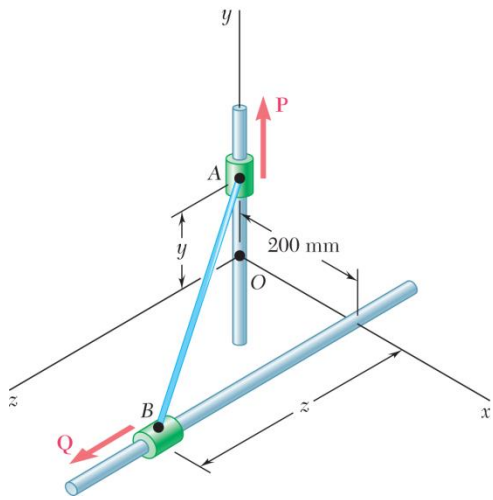

PROBLEM 2.103

Solve Problem 2.102 assuming that $y = 275$ mm.

PROBLEM 2.102 Collars A and B are connected by a 525-mm-long wire and can slide freely on frictionless rods. If a force $\mathbf{P} = (341\text{ N})\mathbf{j}$ is applied to collar A, determine (*a*) the tension in the wire when $y = 155$ mm, (*b*) the magnitude of the force $\mathbf{Q}$ required to maintain the equilibrium of the system.

SOLUTION

From the analysis of Problem 2.102, particularly the results:

$$y^2 + z^2 = 0.23563\text{ m}^2$$

$$T_{AB} = \frac{341\text{ N}}{1.90476\,y}$$

$$Q = \frac{341\text{ N}}{y}z$$

With $y = 275\text{ mm} = 0.275\text{ m}$, we obtain:

$$z^2 = 0.23563\text{ m}^2 - (0.275\text{ m})^2$$

$$z = 0.40\text{ m}$$

and

(*a*) $$T_{AB} = \frac{341\text{ N}}{(1.90476)(0.275\text{ m})} = 651.00$$

or $T_{AB} = 651\text{ N}$ ◀

and

(*b*) $$Q = \frac{341\text{ N}(0.40\text{ m})}{(0.275\text{ m})}$$

or $Q = 496\text{ N}$ ◀

Copyright © McGraw-Hill Education. All rights reserved. No reproduction or distribution without the prior written consent of McGraw-Hill Education.

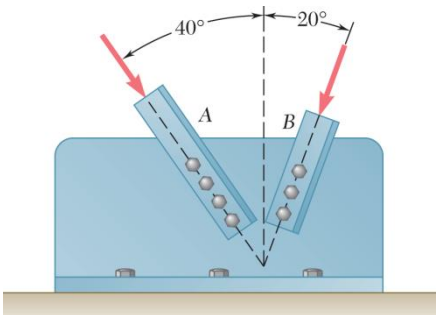

PROBLEM 2.104

Two structural members A and B are bolted to a bracket as shown. Knowing that both members are in compression and that the force is 15 kN in member A and 10 kN in member B, determine by trigonometry the magnitude and direction of the resultant of the forces applied to the bracket by members A and B.

SOLUTION

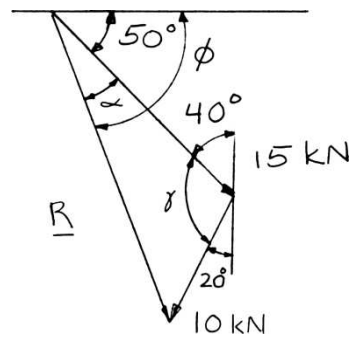

Using the force triangle and the laws of cosines and sines,

we have
$$\gamma = 180° - (40° + 20°)$$
$$= 120°$$

Then
$$R^2 = (15\text{ kN})^2 + (10\text{ kN})^2 - 2(15\text{ kN})(10\text{ kN})\cos 120°$$
$$= 475\text{ kN}^2$$
$$R = 21.794\text{ kN}$$

and
$$\frac{10\text{ kN}}{\sin\alpha} = \frac{21.794\text{ kN}}{\sin 120°}$$
$$\sin\alpha = \left(\frac{10\text{ kN}}{21.794\text{ kN}}\right)\sin 120°$$
$$= 0.39737$$
$$\alpha = 23.414$$

Hence:
$$\phi = \alpha + 50° = 73.414$$

$\mathbf{R} = 21.8\text{ kN} \searrow 73.4°$ ◀

Copyright © McGraw-Hill Education. All rights reserved. No reproduction or distribution without the prior written consent of McGraw-Hill Education.

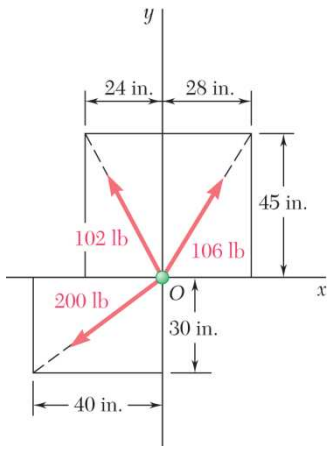

PROBLEM 2.105

Determine the x and y components of each of the forces shown.

SOLUTION

Compute the following distances:

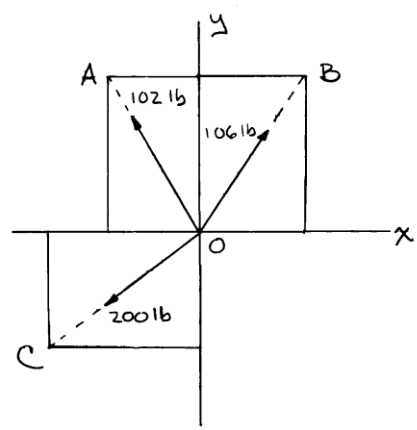

$$OA = \sqrt{(24\text{ in.})^2 + (45\text{ in.})^2}$$
$$= 51.0\text{ in.}$$
$$OB = \sqrt{(28\text{ in.})^2 + (45\text{ in.})^2}$$
$$= 53.0\text{ in.}$$
$$OC = \sqrt{(40\text{ in.})^2 + (30\text{ in.})^2}$$
$$= 50.0\text{ in.}$$

102-lb Force:

$$F_x = -102\text{ lb}\frac{24\text{ in.}}{51.0\text{ in.}} \qquad F_x = -48.0\text{ lb} \blacktriangleleft$$

$$F_y = +102\text{ lb}\frac{45\text{ in.}}{51.0\text{ in.}} \qquad F_y = +90.0\text{ lb} \blacktriangleleft$$

106-lb Force:

$$F_x = +106\text{ lb}\frac{28\text{ in.}}{53.0\text{ in.}} \qquad F_x = +56.0\text{ lb} \blacktriangleleft$$

$$F_y = +106\text{ lb}\frac{45\text{ in.}}{53.0\text{ in.}} \qquad F_y = +90.0\text{ lb} \blacktriangleleft$$

200-lb Force:

$$F_x = -200\text{ lb}\frac{40\text{ in.}}{50.0\text{ in.}} \qquad F_x = -160.0\text{ lb} \blacktriangleleft$$

$$F_y = -200\text{ lb}\frac{30\text{ in.}}{50.0\text{ in.}} \qquad F_y = -120.0\text{ lb} \blacktriangleleft$$

Copyright © McGraw-Hill Education. All rights reserved. No reproduction or distribution without the prior written consent of McGraw-Hill Education.

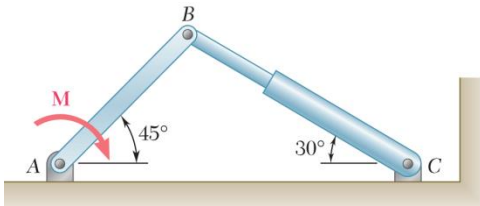

PROBLEM 2.106

The hydraulic cylinder *BC* exerts on member *AB* a force **P** directed along line *BC*. Knowing that **P** must have a 600-N component perpendicular to member *AB*, determine (*a*) the magnitude of the force **P**, (*b*) its component along line *AB*.

SOLUTION

$$180° = 45° + \alpha + 90° + 30°$$
$$\alpha = 180° - 45° - 90° - 30°$$
$$= 15°$$

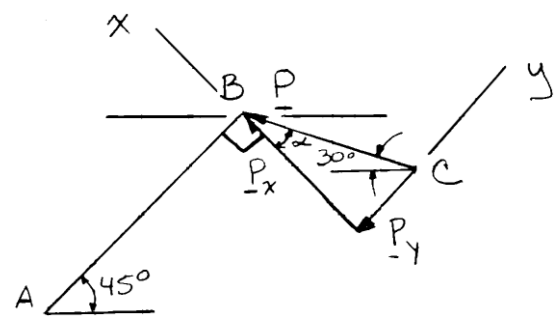

(*a*)
$$\cos\alpha = \frac{P_x}{P}$$
$$P = \frac{P_x}{\cos\alpha}$$
$$= \frac{600\text{ N}}{\cos 15°}$$
$$= 621.17\text{ N}$$

$P = 621\text{ N}$ ◀

(*b*)
$$\tan\alpha = \frac{P_y}{P_x}$$
$$P_y = P_x \tan\alpha$$
$$= (600\text{ N})\tan 15°$$
$$= 160.770\text{ N}$$

$P_y = 160.8\text{ N}$ ◀

Copyright © McGraw-Hill Education. All rights reserved. No reproduction or distribution without the prior written consent of McGraw-Hill Education.

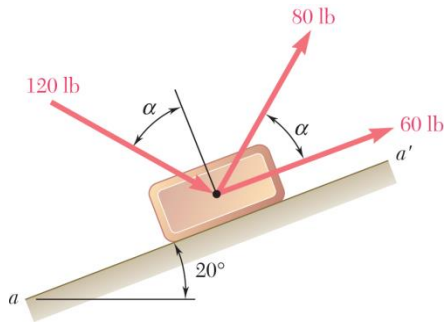

PROBLEM 2.107

Knowing that $\alpha = 40°$, determine the resultant of the three forces shown.

SOLUTION

60-lb Force:

$$F_x = (60\text{ lb})\cos 20° = 56.382\text{ lb}$$
$$F_y = (60\text{ lb})\sin 20° = 20.521\text{ lb}$$

80-lb Force:

$$F_x = (80\text{ lb})\cos 60° = 40.000\text{ lb}$$
$$F_y = (80\text{ lb})\sin 60° = 69.282\text{ lb}$$

120-lb Force:

$$F_x = (120\text{ lb})\cos 30° = 103.923\text{ lb}$$
$$F_y = -(120\text{ lb})\sin 30° = -60.000\text{ lb}$$

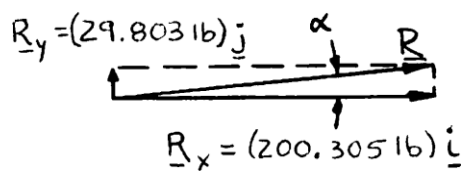

and

$$R_x = \Sigma F_x = 200.305\text{ lb}$$
$$R_y = \Sigma F_y = 29.803\text{ lb}$$
$$R = \sqrt{(200.305\text{ lb})^2 + (29.803\text{ lb})^2}$$
$$= 202.510\text{ lb}$$

Further:

$$\tan\alpha = \frac{29.803}{200.305}$$
$$\alpha = \tan^{-1}\frac{29.803}{200.305}$$
$$= 8.46°$$

$\mathbf{R} = 203\text{ lb} \measuredangle 8.46°$ ◀

Copyright © McGraw-Hill Education. All rights reserved. No reproduction or distribution without the prior written consent of McGraw-Hill Education.

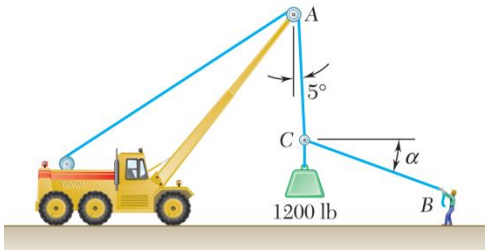

PROBLEM 2.108

Knowing that $\alpha = 20°$, determine the tension (*a*) in cable *AC*, (*b*) in rope *BC*.

SOLUTION

Free-Body Diagram

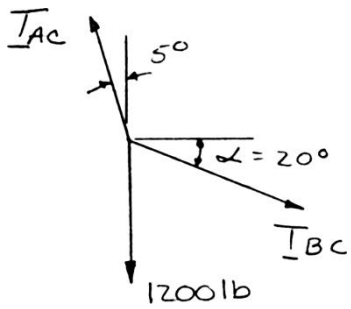

Force Triangle

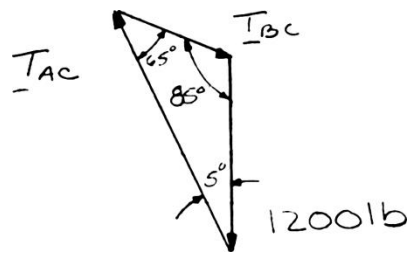

Law of sines: $$\frac{T_{AC}}{\sin 110°} = \frac{T_{BC}}{\sin 5°} = \frac{1200 \text{ lb}}{\sin 65°}$$

(*a*) $$T_{AC} = \frac{1200 \text{ lb}}{\sin 65°} \sin 110°$$ $T_{AC} = 1244 \text{ lb}$ ◀

(*b*) $$T_{BC} = \frac{1200 \text{ lb}}{\sin 65°} \sin 5°$$ $T_{BC} = 115.4 \text{ lb}$ ◀

Copyright © McGraw-Hill Education. All rights reserved. No reproduction or distribution without the prior written consent of McGraw-Hill Education.

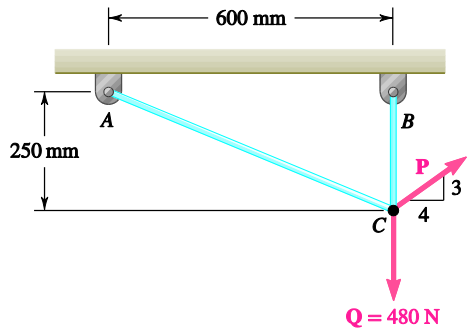

PROBLEM 2.109

Two cables are tied together at C and loaded as shown. Knowing that $P = 360$ N, determine the tension (a) in cable AC, (b) in cable BC.

SOLUTION

Free Body: C

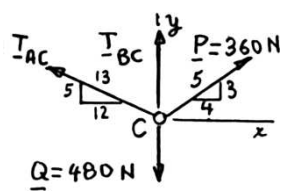

(a) $\Sigma \mathbf{F}_x = 0$: $-\frac{12}{13}T_{AC} + \frac{4}{5}(360\text{ N}) = 0$ $\qquad T_{AC} = 312\text{ N}$ ◀

(b) $\Sigma \mathbf{F}_y = 0$: $\frac{5}{13}(312\text{ N}) + T_{BC} + \frac{3}{5}(360\text{ N}) - 480\text{ N} = 0$

$T_{BC} = 480\text{ N} - 120\text{ N} - 216\text{ N}$ $\qquad T_{BC} = 144.0\text{ N}$ ◀

Copyright © McGraw-Hill Education. All rights reserved. No reproduction or distribution without the prior written consent of McGraw-Hill Education.

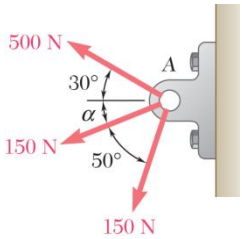

PROBLEM 2.110

Three forces are applied to a bracket as shown. The directions of the two 150-N forces may vary, but the angle between these forces is always 50°. Determine the range of values of α for which the magnitude of the resultant of the forces acting at A is less than 600 N.

SOLUTION

Combine the two 150-N forces into a resultant force Q:

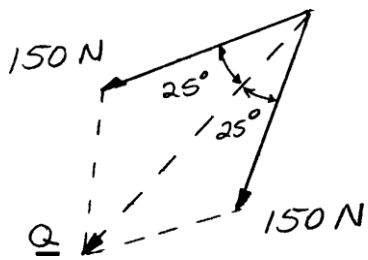

$$Q = 2(150\text{ N})\cos 25°$$
$$= 271.89\text{ N}$$

Equivalent loading at A:

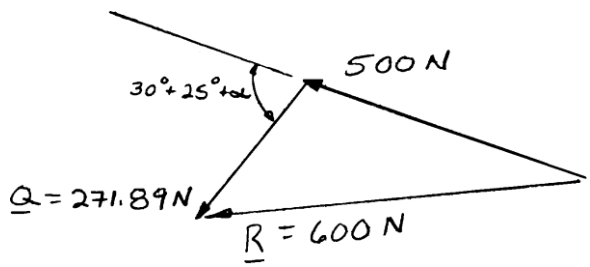

Using the law of cosines:

$$(600\text{ N})^2 = (500\text{ N})^2 + (271.89\text{ N})^2 + 2(500\text{ N})(271.89\text{ N})\cos(55° + \alpha)$$
$$\cos(55° + \alpha) = 0.132685$$

Two values for α: $55° + \alpha = 82.375$

$$\alpha = 27.4°$$

or $55° + \alpha = -82.375°$

$$55° + \alpha = 360° - 82.375°$$
$$\alpha = 222.6°$$

For $R < 600$ lb: $27.4° < \alpha < 222.6°$ ◀

Copyright © McGraw-Hill Education. All rights reserved. No reproduction or distribution without the prior written consent of McGraw-Hill Education.

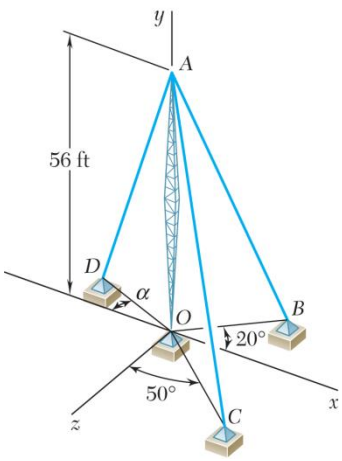

PROBLEM 2.111

Cable AB is 65 ft long, and the tension in that cable is 3900 lb. Determine (a) the x, y, and z components of the force exerted by the cable on the anchor B, (b) the angles θ_x, θ_y, and θ_z defining the direction of that force.

SOLUTION

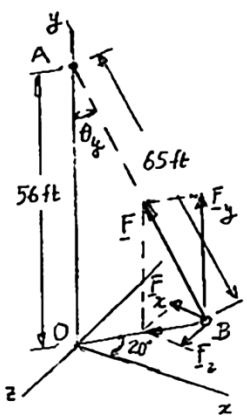

From triangle AOB:

$$\cos\theta_y = \frac{56 \text{ ft}}{65 \text{ ft}} = 0.86154$$

$$\theta_y = 30.51°$$

(a)

$$F_x = -F\sin\theta_y\cos 20° = -(3900 \text{ lb})\sin 30.51°\cos 20°$$

$$F_x = -1861 \text{ lb} \blacktriangleleft$$

$$F_y = +F\cos\theta_y = (3900 \text{ lb})(0.86154) \qquad F_y = +3360 \text{ lb} \blacktriangleleft$$

$$F_z = +(3900 \text{ lb})\sin 30.51°\sin 20° \qquad F_z = +677 \text{ lb} \blacktriangleleft$$

(b)

$$\cos\theta_x = \frac{F_x}{F} = -\frac{1861 \text{ lb}}{3900 \text{ lb}} = -0.4771 \qquad \theta_x = 118.5° \blacktriangleleft$$

From above: $\theta_y = 30.51°$ $\qquad \theta_y = 30.5° \blacktriangleleft$

$$\cos\theta_z = \frac{F_z}{F} = +\frac{677 \text{ lb}}{3900 \text{ lb}} = +0.1736 \qquad \theta_z = 80.0° \blacktriangleleft$$

Copyright © McGraw-Hill Education. All rights reserved. No reproduction or distribution without the prior written consent of McGraw-Hill Education.

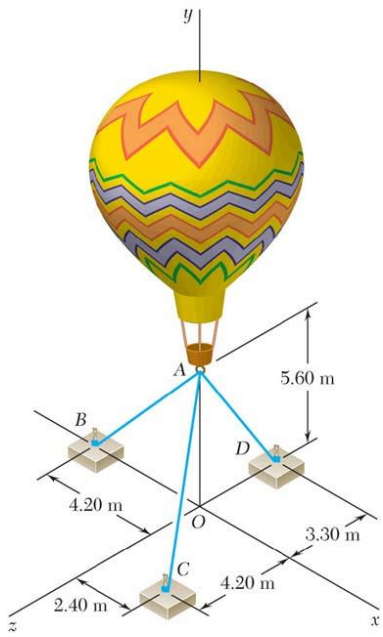

PROBLEM 2.112

Three cables are used to tether a balloon as shown. Determine the vertical force **P** exerted by the balloon at *A* knowing that the tension in cable *AB* is 259 N.

SOLUTION

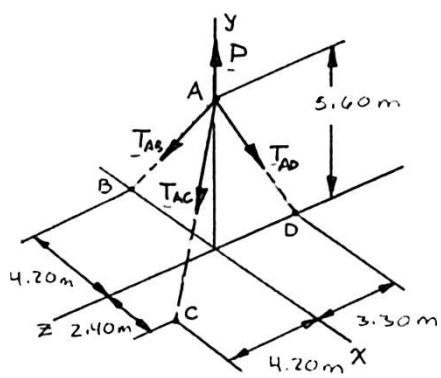

The forces applied at *A* are: $\mathbf{T}_{AB}, \mathbf{T}_{AC}, \mathbf{T}_{AD}$, and **P**

where $\mathbf{P} = P\mathbf{j}$. To express the other forces in terms of the unit vectors **i**, **j**, **k**, we write

$$\overrightarrow{AB} = -(4.20\text{ m})\mathbf{i} - (5.60\text{ m})\mathbf{j} \qquad AB = 7.00\text{ m}$$

$$\overrightarrow{AC} = (2.40\text{ m})\mathbf{i} - (5.60\text{ m})\mathbf{j} + (4.20\text{ m})\mathbf{k} \qquad AC = 7.40\text{ m}$$

$$\overrightarrow{AD} = -(5.60\text{ m})\mathbf{j} - (3.30\text{ m})\mathbf{k} \qquad AD = 6.50\text{ m}$$

and

$$\mathbf{T}_{AB} = T_{AB}\boldsymbol{\lambda}_{AB} = T_{AB}\frac{\overrightarrow{AB}}{AB} = (-0.6\mathbf{i} - 0.8\mathbf{j})T_{AB}$$

$$\mathbf{T}_{AC} = T_{AC}\boldsymbol{\lambda}_{AC} = T_{AC}\frac{\overrightarrow{AC}}{AC} = (0.32432 - 0.75676\mathbf{j} + 0.56757\mathbf{k})T_{AC}$$

$$\mathbf{T}_{AD} = T_{AD}\boldsymbol{\lambda}_{AD} = T_{AD}\frac{\overrightarrow{AD}}{AD} = (-0.86154\mathbf{j} - 0.50769\mathbf{k})T_{AD}$$

Copyright © McGraw-Hill Education. All rights reserved. No reproduction or distribution without the prior written consent of McGraw-Hill Education.

SOLUTION Continued

Equilibrium condition $\Sigma F = 0: \quad \mathbf{T}_{AB} + \mathbf{T}_{AC} + \mathbf{T}_{AD} + P\mathbf{j} = 0$

Substituting the expressions obtained for $\mathbf{T}_{AB}$, $\mathbf{T}_{AC}$, and $\mathbf{T}_{AD}$ and factoring **i**, **j**, and **k**:

$$(-0.6T_{AB} + 0.32432T_{AC})\mathbf{i} + (-0.8T_{AB} - 0.75676T_{AC} - 0.86154T_{AD} + P)\mathbf{j}$$
$$+ (0.56757T_{AC} - 0.50769T_{AD})\mathbf{k} = 0$$

Equating to zero the coefficients of **i**, **j**, **k**:

$$-0.6T_{AB} + 0.32432T_{AC} = 0 \qquad (1)$$

$$-0.8T_{AB} - 0.75676T_{AC} - 0.86154T_{AD} + P = 0 \qquad (2)$$

$$0.56757T_{AC} - 0.50769T_{AD} = 0 \qquad (3)$$

Setting $T_{AB} = 259\text{ N}$ in (1) and (2), and solving the resulting set of equations gives

$$T_{AC} = 479.15\text{ N}$$
$$T_{AD} = 535.66\text{ N}$$

$\mathbf{P} = 1031\text{ N}\uparrow$ ◀

Copyright © McGraw-Hill Education. All rights reserved. No reproduction or distribution without the prior written consent of McGraw-Hill Education.

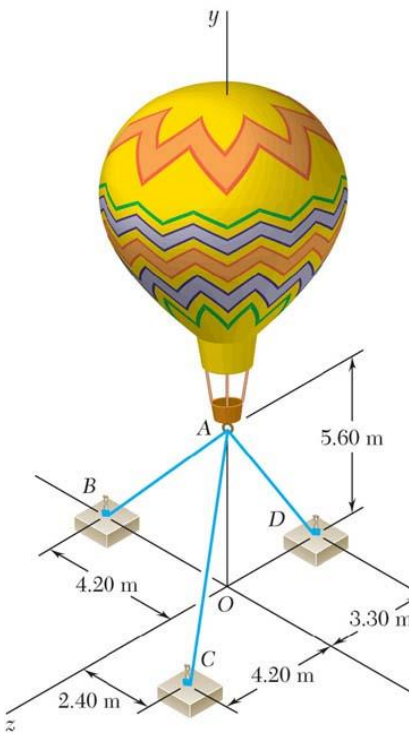

PROBLEM 2.113

Three cables are used to tether a balloon as shown. Determine the vertical force **P** exerted by the balloon at *A* knowing that the tension in cable *AC* is 444 N.

SOLUTION

See Problem 2.112 for the figure and the analysis leading to the linear algebraic Equations (1), (2), and (3) below:

$$-0.6T_{AB} + 0.32432T_{AC} = 0 \tag{1}$$

$$-0.8T_{AB} - 0.75676T_{AC} - 0.86154T_{AD} + P = 0 \tag{2}$$

$$0.56757T_{AC} - 0.50769T_{AD} = 0 \tag{3}$$

Substituting $T_{AC} = 444\text{ N}$ in Equations (1), (2), and (3) above, and solving the resulting set of equations using conventional algorithms gives

$$T_{AB} = 240\text{ N}$$
$$T_{AD} = 496.36\text{ N}$$

$$\mathbf{P} = 956\text{ N}\uparrow \blacktriangleleft$$

Copyright © McGraw-Hill Education. All rights reserved. No reproduction or distribution without the prior written consent of McGraw-Hill Education.

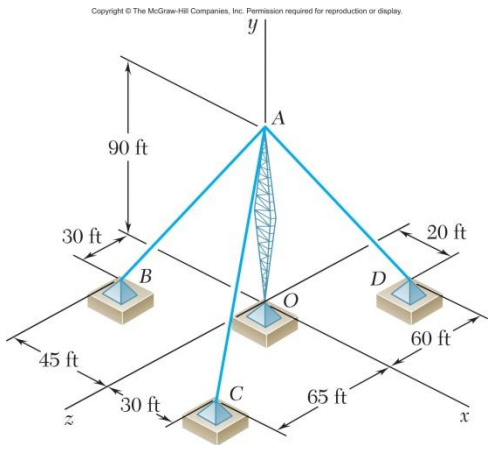

PROBLEM 2.114

A transmission tower is held by three guy wires attached to a pin at A and anchored by bolts at B, C, and D. If the tension in wire AB is 630 lb, determine the vertical force **P** exerted by the tower on the pin at A.

SOLUTION

Free Body A:

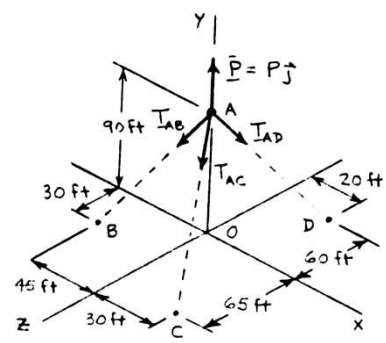

$$\Sigma\mathbf{F} = 0: \quad \mathbf{T}_{AB} + \mathbf{T}_{AC} + \mathbf{T}_{AD} + P\mathbf{j} = 0$$

$$\overrightarrow{AB} = -45\mathbf{i} - 90\mathbf{j} + 30\mathbf{k} \qquad AB = 105 \text{ ft}$$

$$\overrightarrow{AC} = 30\mathbf{i} - 90\mathbf{j} + 65\mathbf{k} \qquad AC = 115 \text{ ft}$$

$$\overrightarrow{AD} = 20\mathbf{i} - 90\mathbf{j} - 60\mathbf{k} \qquad AD = 110 \text{ ft}$$

We write

$$\mathbf{T}_{AB} = T_{AB}\boldsymbol{\lambda}_{AB} = T_{AB}\frac{\overrightarrow{AB}}{AB} = \left(-\frac{3}{7}\mathbf{i} - \frac{6}{7}\mathbf{j} + \frac{2}{7}\mathbf{k}\right)T_{AB}$$

$$\mathbf{T}_{AC} = T_{AC}\boldsymbol{\lambda}_{AC} = T_{AC}\frac{\overrightarrow{AC}}{AC} = \left(\frac{6}{23}\mathbf{i} - \frac{18}{23}\mathbf{j} + \frac{13}{23}\mathbf{k}\right)T_{AC}$$

$$\mathbf{T}_{AD} = T_{AD}\boldsymbol{\lambda}_{AD} = T_{AD}\frac{\overrightarrow{AD}}{AD} = \left(\frac{2}{11}\mathbf{i} - \frac{9}{11}\mathbf{j} - \frac{6}{11}\mathbf{k}\right)T_{AD}$$

Substituting into the Eq. $\Sigma\mathbf{F} = 0$ and factoring $\mathbf{i}, \mathbf{j}, \mathbf{k}$:

$$\left(-\frac{3}{7}T_{AB} + \frac{6}{23}T_{AC} + \frac{2}{11}T_{AD}\right)\mathbf{i} + \left(-\frac{6}{7}T_{AB} - \frac{18}{23}T_{AC} - \frac{9}{11}T_{AD} + P\right)\mathbf{j} + \left(\frac{2}{7}T_{AB} + \frac{13}{23}T_{AC} - \frac{6}{11}T_{AD}\right)\mathbf{k} = 0$$

Copyright © McGraw-Hill Education. All rights reserved. No reproduction or distribution without the prior written consent of McGraw-Hill Education.

PROBLEM 2.114 (Continued)

Setting the coefficients of $\mathbf{i}$, $\mathbf{j}$, $\mathbf{k}$, equal to zero:

$$\mathbf{i}: \quad -\frac{3}{7}T_{AB} + \frac{6}{23}T_{AC} + \frac{2}{11}T_{AD} = 0 \tag{1}$$

$$\mathbf{j}: \quad -\frac{6}{7}T_{AB} - \frac{18}{23}T_{AC} - \frac{9}{11}T_{AD} + P = 0 \tag{2}$$

$$\mathbf{k}: \quad \frac{2}{7}T_{AB} + \frac{13}{23}T_{AC} - \frac{6}{11}T_{AD} = 0 \tag{3}$$

Set $T_{AB} = 630 \text{ lb}$ in Eqs. (1) – (3):

$$-270 \text{ lb} + \frac{6}{23}T_{AC} + \frac{2}{11}T_{AD} = 0 \tag{1'}$$

$$-540 \text{ lb} - \frac{18}{23}T_{AC} - \frac{9}{11}T_{AD} + P = 0 \tag{2'}$$

$$180 \text{ lb} + \frac{13}{23}T_{AC} - \frac{6}{11}T_{AD} = 0 \tag{3'}$$

Solving, $T_{AC} = 467.42 \text{ lb} \quad T_{AD} = 814.35 \text{ lb} \quad P = 1572.10 \text{ lb}$ $\qquad P = 1572 \text{ lb}$ ◀

Copyright © McGraw-Hill Education. All rights reserved. No reproduction or distribution without the prior written consent of McGraw-Hill Education.