# *Genetics - From Genes to Genomes 8th edition Goldberg Solutions Manual*

SKU: 9781266125430-SOLUTIONS

chapter 1

# Mendel's Principles of Heredity

## Synopsis

Chapter 1 covers the basic principles of inheritance that can be summarized as Mendel's Laws of Segregation (for one gene) and Independent Assortment (for more than one gene).

## Key terms

**genes** and **alleles** of genes – A gene determines a trait, and different alleles or forms of a gene exist. The color gene in peas has two alleles: yellow and green.

**genotype** and **phenotype** – Genotype is the genetic makeup of an organism (written as alleles of specific genes), while phenotype is how the organism looks.

**homozygous** and **heterozygous** – When both alleles of a gene are the same, the individual is homozygous for that gene (or **pure breeding**). If the two alleles are different, the organism is heterozygous (also called a **hybrid**).

**dominant** and **recessive** – The dominant allele is the one that controls phenotype in the heterozygous genotype; the recessive allele controls phenotype only in a homozygote.

**monohybrid** or **dihybrid cross** – a cross between individuals who are both heterozygotes for one gene (monohybrid) or for two genes (dihybrid).

**testcross** – performed to determine if an individual with the dominant characteristic is homozygous or heterozygous: An individual with the dominant phenotype but unknown genotype is crossed with an individual with the recessive phenotype.

## Key ratios

**3:1** – Ratio of progeny phenotypes in a cross between monohybrids
$[Aa \times Aa \rightarrow 3\ A\text{–}$ (dominant phenotype) $: 1\ aa$ (recessive phenotype)$]$

**1:2:1** – Ratio of progeny genotypes in a cross between monohybrids
$(Aa \times Aa \rightarrow 1\ AA : 2\ Aa : 1aa)$

**1:1** – Ratio of progeny genotypes in a cross between a heterozygote and a recessive homozygote
$(Aa \times aa \rightarrow 1\ Aa : 1aa)$

**1:0** – All progeny are the same phenotype. Can result from either of two cases:
$[AA \times -- \rightarrow A\text{–}$ (all dominant phenotype)$]$
$[aa \times aa \rightarrow aa$ (all recessive phenotype)$]$

**9:3:3:1** – Ratio of progeny phenotypes in a dihybrid cross
$(Aa\ Bb \times Aa\ Bb \rightarrow 9\ A\text{–}\ B\text{–} : 3\ A\text{–}\ bb : 3\ aa\ B\text{–} : 1\ aa\ bb)$


© McGraw Hill LLC. All rights reserved. No reproduction or distribution without the prior written consent of McGraw Hill LLC.

Genetics - From Genes to Genomes 8th edition Goldberg Solutions Manual

## Problem Solving

The essential component of solving most genetics problems is to DIAGRAM THE CROSS in a consistent manner. Usually, you will be given information about phenotypes, so the diagram would be:

Phenotype of one parent × phenotype of the other parent → phenotype(s) of progeny

The goal is to assign genotypes to the parents and then use these predicted genotypes to generate the genotypes, phenotypes, and ratios of progeny. If the predicted progeny match the observed data you were provided, then your genetic explanation is plausible.

The points listed below will be particularly helpful in guiding your problem solving:

- Remember that **two alleles of each gene exist when describing the genotypes of individuals.** But if you are describing gametes, remember that **only one allele of each gene is in a gamete.**
- **You will need to determine whether a character is dominant or recessive.** Two main clues will help you answer this question.
  - First, if the parents of a cross are true breeding for the alternative characters of the trait, look at the phenotype of the $F_1$ progeny. Their genotype must be heterozygous, and their phenotype is thus determined by the dominant allele of the gene.
  - Second, look at the $F_2$ progeny (that is, the progeny of the $F_1$ hybrids). The 3/4 portion of the 3:1 phenotypic ratio indicates the dominant character.
- You should **recognize the need to set up a testcross** (to establish the genotype of an individual showing the dominant character by crossing this individual to a homozygote for the recessive allele).
- You must **keep in mind the basic rules of probability:**
  - *Product rule:* If two outcomes must occur together as the result of independent events, the probability of one outcome AND the other outcome is the product of the two individual probabilities.
  - *Sum rule:* If there is more than one way in which an outcome can be produced, the probability of one OR the other occurring is the sum of the two mutually exclusive individual probabilities.
- Be aware that sometimes you need to use **conditional probability**, meaning that an event's probability is influenced by its relationship to another event that has already occurred. You were introduced to conditional probability in Solved Problem III in this chapter, and several of the problems in Section 1.3 require this kind of thinking. For example, suppose you are given a pedigree diagram for a disease caused by a recessive allele. You are asked to determine the chance that an unaffected individual is a carrier ($Dd$) when both parents are carriers. As the cross that produced the unaffected individual is $Dd \times Dd$, you would expect the chance of a $Dd$ child to be 1/2. This is true, but it was not the question you were asked! You know something about the individual in question—which is that they are unaffected—they cannot be $dd$. This means that in this case, the $1\ DD : 2\ Dd : 1\ dd$ ratio changes to $1\ DD : 2\ Dd$, and the chance is 2/3 that the unaffected

© McGraw Hill LLC. All rights reserved. No reproduction or distribution without the prior written consent of McGraw Hill LLC.

Genetics - From Genes to Genomes 8th edition Goldberg Solutions Manual

individual is a carrier. When solving probability problems in pedigrees, always think carefully about what you know (and what you don't know) about each individual.

- A few of the problems in this chapter will require you to use the **binomial theorem,** an equation that determines how many different orders exist for two different items. For example, suppose you want to know how many different 5-child families exist that are composed of 2 girls and 3 boys. This is the same question as: How many ways can you order 2 of thing **a** (girls) and 3 of thing **b** (boys)? The binomial theorem looks like this: **number of orders = T! / a! × b!** where **T = a + b,** which is the total number of things. Therefore, the number of ways to order 2 girls and 3 boys is:
  $(5 \times 4 \times 3 \times 2 \times 1) / (2 \times 1)(3 \times 2 \times 1) = (5 \times 4)/2 = 10$.
- Remember that **Punnett squares are not the only means of analyzing a cross**; **branched-line diagrams and calculations of probabilities using the product and sum rules can be more efficient ways of looking at complicated crosses** involving more than one or two genes.
- **Be able to draw and interpret pedigrees**. When the trait is rare, look for vertical patterns of inheritance characteristic of dominant traits, and horizontal patterns that typify recessive traits. Check your work by assigning genotypes to all individuals in the pedigree and verifying that these make sense.
- The vocabulary problem (the first problem in the set) is a useful gauge of how well you know the terms most crucial for your understanding of the chapter.

## Vocabulary

### 1.

| | | | |
|---|---|---|---|
| a. | phenotype | 4. | observable characteristic |
| b. | alleles | 3. | alternate forms of a gene |
| c. | independent assortment | 6. | alleles of one gene separate into gametes randomly with respect to alleles of other genes |
| d. | gametes | 7. | reproductive cells containing only one copy of each gene |
| e. | gene | 11. | the heritable entity that determines a characteristic |
| f. | segregation | 13. | the separation of the two alleles of a gene into different gametes |
| g. | heterozygote | 10. | an individual with two different alleles of a gene |
| h. | dominant | 2. | the allele expressed in the phenotype of the heterozygote |
| i. | $F_1$ | 14. | offspring of the P generation |
| j. | testcross | 9. | the cross of an individual of ambiguous genotype with a homozygous recessive individual |
| k. | genotype | 12. | the alleles an individual has |


© McGraw Hill LLC. All rights reserved. No reproduction or distribution without the prior written consent of McGraw Hill LLC.

Genetics - From Genes to Genomes 8th edition Goldberg Solutions Manual

| | |
|---|---|
| l. recessive | 8. the allele that does not contribute to the phenotype of the heterozygote |
| m. dihybrid cross | 5. a cross between individuals both heterozygous for two genes |
| n. homozygote | 1. having two identical alleles of a given gene |

## Section 1.1

**2.** Prior to Mendel, **people held two basic misconceptions about inheritance.** First was the common idea of **blended inheritance:** that the parental characteristics become mixed in the offspring and forever changed. Second, many people thought that **one parent contributes the most to an offspring's inherited features.** (For example, some people thought they saw a fully formed child in a human sperm.)

In addition, **people who studied inheritance did not approach the problem in an organized way.** They did not always control their crosses. They did not look at traits with clear-cut alternative characteristics. They did not start with pure-breeding lines. They did not count the progeny types in their crosses. For these reasons, they could not develop the same insights as did Mendel.

**3.** **Several advantages exist for using peas for the study of inheritance:**

- Peas have a fairly rapid generation time (at least two generations per year if grown in the field, three or four generations per year if grown in greenhouses).
- Peas can either self-fertilize or be crossed artificially by an experimenter.
- Peas produce large numbers of offspring (hundreds per parent).
- Peas can be maintained as pure-breeding, self-fertilized lines, simplifying the ability to perform subsequent crosses.
- Because peas have been maintained as inbred stocks, two easily distinguished and discrete forms of many traits are known.
- Peas are easy and inexpensive to grow.

In contrast, **studying genetics in humans has several disadvantages:**

- The generation time of humans is very long (roughly 20 years).
- No self-fertilization occurs in humans, and it is not ethical to manipulate crosses.
- Humans produce only a small number of offspring per mating (usually only one) or per parent (almost always fewer than 20).
- Although people who are homozygous for a trait do exist (analogous to pure-breeding stocks), homozygosity cannot be maintained because mating with another individual is needed to produce the next generation.
- Because human populations are not inbred, most human traits show a continuum of phenotypes; only a few traits have two distinct forms.
- People require a lot of expensive care to "grow".

**One major advantage exists nonetheless for the study of genetics in humans:** Because many inherited traits result in disease syndromes, and because the world's population is

© McGraw Hill LLC. All rights reserved. No reproduction or distribution without the prior written consent of McGraw Hill LLC.

Genetics - From Genes to Genomes 8th edition Goldberg Solutions Manual

now nearly 8 billion people, a very large number of people with diverse variant phenotypes can be recognized. These variations are the raw material of genetic analysis.

## Section 1.2

**4. a.** **Two phenotypes are seen in the second generation of this cross: normal and albino**. Thus, only one gene with two alleles is needed to control the phenotypes observed. **The 3:1 ratio of these phenotypes in the $F_2$ generation** will be seen only if a single gene is involved.

**b.** Note that the phenotype of the first generation progeny is normal color, and that in the second generation, there is a ratio of 3 normal : 1 albino. Both observations show that **the allele controlling the normal phenotype ($A$) is dominant to the allele controlling the albino phenotype ($a$).**

**c.** In a testcross, an individual showing the dominant phenotype but that has an unknown genotype (the normal-colored female parent in this problem) is mated with an individual that shows the recessive phenotype and is therefore homozygous for the recessive allele. In this case, the individual with the recessive phenotype must be both male and an albino, so **the male parent's genotype is $aa$.** The normally colored offspring must receive an $A$ allele from the mother, so **the genotype of the normal offspring of the testcross is $Aa$.** The albino offspring must receive an $a$ allele from the mother, so **the genotype of the albino offspring of the testcross is $aa$.** Thus, **the female parent must be heterozygous $Aa$.** A diagram of the cross follows:

| normal | × | albino | → | 10 normal : 11 albino | |
|---|---|---|---|---|---|
| $Aa$ | | $aa$ | | $Aa$ | $aa$ |

**5.** Because two different phenotypes result from the mating of two cats of the same phenotype, and because the ratio of the short-haired to long-haired progeny is 3:1, only a single gene is involved, and both short-haired parent cats must have been heterozygous. The phenotype expressed in the heterozygotes (the parent cats) is the dominant phenotype. Therefore, **short hair is dominant to long hair.** A diagram of the cross follows:

| short-haired | × | short-haired | → | 6 short-haired : 2 long-haired | |
|---|---|---|---|---|---|
| $Ss$ | | $Ss$ | | $Ss$ | $ss$ |

**6. a.** Two affected individuals have an affected child and a normal child. This outcome is not possible if the affected individuals were homozygous for a recessive allele conferring piebald spotting, and if the trait is controlled by a single gene. Therefore, **piebald must be the dominant characteristic.**

**b.** If the trait is dominant, the piebald parents could be either homozygous ($PP$) or heterozygous ($Pp$). However, because the two affected individuals have an unaffected child ($pp$), **they both must be heterozygous ($Pp$).** A diagram of the cross follows:

© McGraw Hill LLC. All rights reserved. No reproduction or distribution without the prior written consent of McGraw Hill LLC.

Genetics - From Genes to Genomes 8th edition Goldberg Solutions Manual

| piebald | × | piebald | → | 1 piebald : 1 normal | |
|---|---|---|---|---|---|
| *Pp* | | *Pp* | | *Pp* | *pp* |

Note that although the apparent ratio is 1:1, this is not a testcross but is instead a cross between two monohybrids. The reason for this discrepancy from the expected 3:1 ratio is that only two progeny were obtained, so this number is insufficient to establish what the true ratio would be if many progeny resulted from the mating.

**7.** **You would conduct a testcross between your normal-winged fly (*W*–) and a short-winged fly that must be homozygous recessive (*ww*).** The possible results are diagrammed here; the first genotype in each cross is that of the normal-winged fly whose genotype was originally unknown. Note that **if the normal-winged fly is a homozygote, all the progeny should have normal wings, but if the normal-winged fly is a heterozygote, half the progeny should have normal wings and the other half should have short wings.**

*WW* × *ww* → all *Ww* (normal wings)

*Ww* × *ww* → 1/2 *Ww* (normal wings) : 1/2 *ww* (short wings)

**8.** First diagram the crosses:

closed × open → $F_1$ all open → $F_2$ 145 open : 59 closed

$F_1$ open × closed → 81 open : 77 closed

**The results of the crosses fit the pattern of inheritance of a single gene, with open dominant to closed.** The first cross is like those Mendel did with pure-breeding parents, although you were not provided with the information that the starting plants were true-breeding. **The $F_1$ plants are open, indicating that open is dominant. The closed parent must be homozygous for the recessive allele. Because only one phenotype is seen among the $F_1$ plants, the open parent must be homozygous for the dominant allele.** Thus, the parental cucumber plants were indeed true-breeding homozygotes.

Self-fertilization of the $F_1$ plants results in a 3:1 ratio of open : closed among the $F_2$ progeny. **The 3:1 ratio in the $F_2$ shows that a single gene controls the trait and that the $F_1$ plants are all monohybrids (that is, they are heterozygotes).**

The final cross verifies that the $F_1$ plants from the first cross are heterozygotes because **this testcross yields a 1:1 ratio of open: closed progeny.** In summary, all the data are consistent with the trait being determined by one gene with two alleles, and open being the dominant characteristic. Rewritten as genotypes for a gene with alleles *O* and *o*, the crosses were:

P *oo* (closed) × *OO* (open) → $F_1$ *Oo* (open) → $F_2$ 145 *O*– (open): 59 *oo* (closed)

$F_1$ *Oo* (open) × *oo* (closed) → 81 *Oo* (open) : 77 *oo* (closed)

**9.** **The dominant characteristic (short tail) is easier to eliminate from the population by selective breeding. The reason is you can recognize every animal that has inherited the *short tail* allele, because only one such dominant allele is needed to see the characteristic. If you prevent all the short-tailed animals from mating, then the allele would become extinct.**

© McGraw Hill LLC. All rights reserved. No reproduction or distribution without the prior written consent of McGraw Hill LLC.

Genetics - From Genes to Genomes 8th edition Goldberg Solutions Manual

**On the other hand, the recessive *dilute* allele can be passed unrecognized from generation to generation in heterozygous mice (who are *carriers*).** The heterozygous mice are not dilute, so they cannot be distinguished from homozygous dominant mice with normal coat color. You could prevent the homozygous recessive mice with the dilute characteristic from mating, but the *dilute* allele would remain among the carriers, which you could not recognize.

**10.** The problem states that only one gene is involved in this trait, and that the dominant allele is dimpled ($D$) while the recessive allele is nondimpled ($d$). (We are using Mendelian symbols here instead of human symbols for genotypes to emphasize which allele is dominant and which is recessive.)

**a.** Diagram the cross described in this part of the problem:

nondimpled ♂ × dimpled ♀ → proportion of dimpled $F_1$?

Note that the dimpled woman in this cross had a $dd$ (nondimpled) mother, so the dimpled woman MUST be heterozygous. We can thus rediagram this cross with genotypes:

$dd$ (nondimpled) ♂ × $Dd$ (dimpled) ♀ → 1/2 $Dd$ (dimpled) : 1/2 $dd$ (nondimpled)

**Half the children produced by this couple would be expected to be dimpled.**

**b.** Diagram the cross:

dimpled ($D?$) ♂ × nondimpled ($dd$) ♀ → nondimpled $F_1$ ($dd$)

Because they have a nondimpled child ($dd$), the man must have a $d$ allele to contribute to the offspring. **The man is thus *Dd*.**

**c.** Diagram the cross:

dimpled ($D?$) ♂ × nondimpled ($dd$) ♀ → 8 $F_1$, all dimpled ($D$–)

The $D$ allele in the children must come from their father. **The father could be either *DD* or *Dd*, but it is most probable that the father's genotype is *DD*.** We cannot rule out completely that the father is a $Dd$ heterozygote. However, if this was the case, the probability that all 8 children would inherit the $D$ allele from a $Dd$ parent is only $(1/2)^8 = 1/256$ or about 0.4%. In other words, if the father was $Dd$, the chance that at least 1 of the 8 children would be nondimpled is 255/256 or about 99.6%.

**11. a.** The 3:1 ratio in the progeny of cross 1 × 4 suggests that a single gene controls flowering time, and that late ($F$) is dominant to early ($f$).

**b.** **Plants 1 and 4 are *Ff*** because their progeny exhibit a 3 late ($F$–) :1 early ($ff$) ratio. **Plant 2 is *ff*** because when crossed with plant 1 ($Ff \times ff$), the progeny are in a 1:1 ratio of late ($Ff$) to early ($ff$). **Plant 3 is *FF*** because when crossed with either 1, 3, or 4, all the progeny are late ($F$–).

**c.** **Self-fertilization of Plant 1 or Plant 4 ($Ff$) would be expected to produce progeny in a phenotypic ratio of 3 late : 1 early (3 $F$– : 1 $ff$). Self-fertilization of Plant 2 ($ff$) would produce all early ($ff$) progeny, and self-fertilization of Plant 3 would result in progeny that are all late ($FF$).**

© McGraw Hill LLC. All rights reserved. No reproduction or distribution without the prior written consent of McGraw Hill LLC.

Genetics - From Genes to Genomes 8th edition Goldberg Solutions Manual

**12. a.** You need to realize that the results tabulated are unlike those of the plants in the previous problems in an important way: The parents are not two individuals who had 30 to 50 progeny. Instead, the entries in the table show the progeny of many pairs of parents with the same characteristics, but who could have different genotypes. This means that if sticky and dry are controlled by alternate alleles of a single gene, in any row of the table involving parents with the dominant phenotype, those parents could be a mixture of homozygous dominant and heterozygous individuals.

Thus, in a case where both parents have the dominant phenotype, some of the crosses could be $Ss \times Ss$, some could be $SS \times Ss$, and some could be $SS \times SS$. In a case where one parent has the dominant phenotype and the other parent has the recessive phenotype, some of the crosses could be $Ss \times ss$ and some could be $SS \times ss$. The $Ss \times Ss$ crosses from the dominant × dominant case and the $Ss \times ss$ crosses from the dominant × recessive case could produce some progeny who will be homozygous recessive ($ss$). Only crosses between two homozygous recessive individuals will result in progeny that all have the recessive phenotype. The only crosses that fit this criterion are in the row: dry × dry → all dry. Therefore, **dry is the recessive phenotype ($ss$) and sticky is the dominant phenotype ($S$–).**

**b. 3:1 or 1:1 ratios are not observed in the table because some sticky individuals in each of the first two rows are $SS$ while others are $Ss$.**

In the first row of the table, the sticky × sticky matings in this human population are not simply crosses between heterozygotes, but instead a mix of three different kinds of matings: between two heterozygotes ($Ss \times Ss$), between two homozygotes ($SS \times SS$), and between a homozygote and heterozygote ($SS \times Ss$). The progeny from the two latter crosses obscure the 3:1 ratio that would result from crosses between heterozygotes.

In the second row of the table, the sticky × dry matings include both $Ss \times ss$ and $SS \times ss$. The progeny of the latter crosses obscure the 1:1 ratio that would result from any $Ss \times ss$ testcrosses in the same row.

**13.** Diagram the cross:

black × red → 1 black : 1 red

**No, you cannot tell how coat color is inherited from the results of this one mating**, even if you assume that alternative alleles of a single gene are involved. The 1:1 ratio indicates that this was a testcross—a cross between a heterozygote and a homozygous recessive. However, we cannot know from the testcross whether red or black is the dominant phenotype. To determine which phenotype is dominant, remember that an animal with a recessive phenotype must be homozygous. Thus, **if you mate several red horses to each other and also mate several black horses to each other, the crosses that always yield only offspring with the parental phenotype must have been between homozygous recessives.** For example, if all the black × black matings result in only black offspring, black is recessive. Some of the red × red crosses (specifically, crosses between heterozygotes) would then result in both red and black offspring in a ratio of 3:1. To establish this point, you might have to do several red × red crosses, because some of these crosses could be between red horses homozygous for the dominant allele. If you suspected red was dominant, you could ensure that you were sampling heterozygotes by using the

© McGraw Hill LLC. All rights reserved. No reproduction or distribution without the prior written consent of McGraw Hill LLC.

Genetics - From Genes to Genomes 8th edition Goldberg Solutions Manual

red progeny of black × red crosses (such as that described in the problem) for subsequent red × red crosses.

**14. a.** **1/6** because a die has 6 different sides.

**b.** Three even numbers exist (2, 4, and 6). The probability of obtaining any one of these is 1/6, and the 3 events are mutually exclusive. Because rolling a 2 or a 4 or a 6 will satisfy the criterion of rolling an even number, use the sum rule: 1/6 + 1/6 + 1/6 = 3/6 = **1/2.**

**c.** You must roll either a 3 or a 6, so 1/6 + 1/6 = 2/6 = **1/3.**

When thinking about probabilities involving 2 dice (in the diagram that follows, a *white* one and a *pink* one), it helps to realize that: (1) The probabilities calculated for rolling both dice simultaneously will be the same as those calculated for rolling them in succession (first one, then the other), and (2) as shown in the diagram that follows, 36 different outcomes are possible:

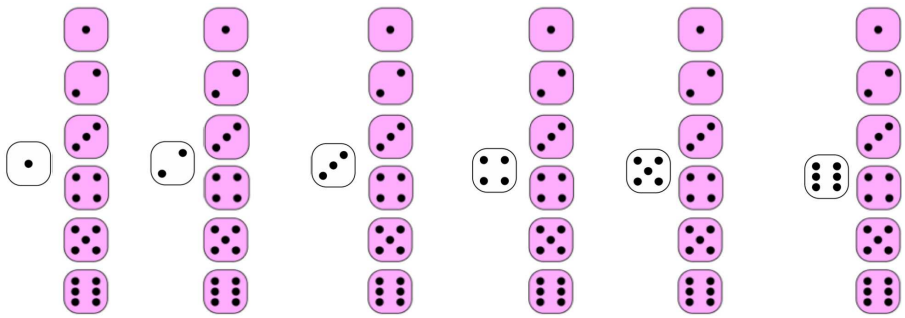

**d.** Each die is independent of the other, and you're asking for both dice to turn up a certain way. Thus, the product rule is used: 1/6 × 1/6 = **1/36.** (You can see in the diagram above that two 6s is one of the 36 possible outcomes.)

**e.** The probability of getting an even number on one die is 3/6 = 1/2 [see part (b)]. This is also the probability of getting an odd number on the second die. This result could happen either of 2 ways—you could get the odd number first and the even number second, or vice versa, and these are mutually exclusive possibilities. You use the product rule to determine the chance of each kind of outcome that satisfies the criterion (the first die is even and the second die is odd, or the first die is odd and the second die is even). Then, you use the sum rule because you're determining the chance of one or the other outcome occurring. Thus, the probability of both occurring is (1/2 × 1/2) [the chance of an even number on the first die and an odd number on the second die] + (1/2 × 1/2) [the chance of an odd number on the first die and an even number on the second die] = 1/4 + 1/4 = **1/2.**

Another way of thinking about this problem is to imagine rolling the dice one at a time. The first die can land any way (probability = 1), but the second die must show an odd number (probability = 1/2) if the first die was even, and an even number (probability = 1/2) if the first die was odd. Therefore, no matter how the first die lands, the second die has a 1/2 chance of landing on a number that satisfies the stated criterion. Because you're asking that both dice have the desired outcome (the first die

© McGraw Hill LLC. All rights reserved. No reproduction or distribution without the prior written consent of McGraw Hill LLC.

Genetics - From Genes to Genomes 8th edition Goldberg Solutions Manual

lands any way, and the second die is odd or even, depending on the first die), you then use the product rule. So, the probability that the criterion is satisfied is $1 \times 1/2 = 1/2$. [You can see in the diagram for part (c) that 18 of the 36 possible outcomes (1/2 the outcomes) satisfy the criterion that one die has an odd number and the other die has an even number.]

**f.** The probability of any specific number on a die = 1/6. The probability of the same number on the other die = 1/6. The probability of both occurring at the same time (use the product rule) is $1/6 \times 1/6 = 1/36$. The same probability is true for the other 5 possible numbers on the dice. Thus, the probability of any one of these mutually exclusive situations occurring (use the sum rule) is $1/36 + 1/36 + 1/36 + 1/36 + 1/36 + 1/36 = 6/36 =$ **1/6.**

Another way of thinking of about this problem is that the first die can land any way at all (probability = 1), but the second die must match the first one (probability = 1/6). The chance of both events happening is $1 \times 1/6 = 1/6$. [You can see in the diagram above that 6 of the 36 possible outcomes (1/6 of the outcomes) satisfy the criterion that both numbers are the same.]

**g.** The probability of rolling two numbers both over four is the probability of rolling a 5 or a 6 on one die ($1/6 + 1/6 = 1/3$) and a 5 or a 6 on the other die (1/3). The results for the two dice are independent events and you're asking that both of them occur, so $1/3 \times 1/3 =$ **1/9.** [You can see in the diagram above that 4 of the 36 possible outcomes (= 1/9 of the outcomes) satisfy the criterion that both numbers are over 4.]

**15. a.** **The probability of drawing a face card ≈ 0.23** (12 face cards / 52 cards). **The probability of drawing a red card = 0.5** (26 red cards / 52 cards). **The probability of drawing a red face card = probability of a red card × probability of a face card = 0.23 × 0.5 ≈ 0.12.** (Alternatively, 6 red face cards / 52 cards ≈ 0.12.)

**b.** As seen in part (a), the probability of drawing a face card in a deck of 52 cards is ~0.23. If after each draw, the card is returned to the deck, then the deck will have 52 cards in each draw. Thus, **the chance that all four cards picked are face cards is ~$(0.23)^4 \approx 0.0028$.**

**c.** The chance that the first card is a face card is (12/52). If that card was a face card, then the chance that the second card is a face card is (11/51), the chance that the third card is also a face card is (10/50), and the chance that the fourth card is a face card is (9/49). (This is an example of *conditional probability* because the conditions and thus the probabilities change after each draw.) Thus, if the cards are not returned to the deck, **the chance that the first four cards picked are face cards is (12/52) × (11/51) × (10/50) × (9/49) ≈ 0.0018.**

**16. a.** The *Aa bb CC DD* individual can produce 2 genetically different eggs that vary in their allele of the first gene (*A* or *a*). They are homozygous for the other 3 genes and can make eggs with only the *b C D* alleles for these genes. Thus, using the product rule (each gene's alleles segregate independently into gametes), this individual can make $2 \times 1 \times 1 \times 1 =$ **2 different types of gametes:** (*A b C D* and *a b C D*).


© McGraw Hill LLC. All rights reserved. No reproduction or distribution without the prior written consent of McGraw Hill LLC.

Genetics - From Genes to Genomes 8th edition Goldberg Solutions Manual

**b.** Using the same logic, an $AA\ Bb\ Cc\ dd$ individual can produce $1 \times 2 \times 2 \times 1 =$ **4 different types of gametes:** $A$ ($B$ or $b$) ($C$ or $c$) $d$.

**c.** An individual of genotype $Aa\ Bb\ cc\ Dd$ can make $2 \times 2 \times 1 \times 2 =$ **8 different types of gametes:** ($A$ or $a$) ($B$ or $b$) $c$ ($D$ or $d$).

**d.** An individual who is a quadruple heterozygote can make $2 \times 2 \times 2 \times 2 =$ **16 different types of gametes:** ($A$ or $a$) ($B$ or $b$) (C or $c$) ($D$ or $d$). This problem [like those in parts (a–c) above, but *not shown*] can be visualized with a branched-line diagram.

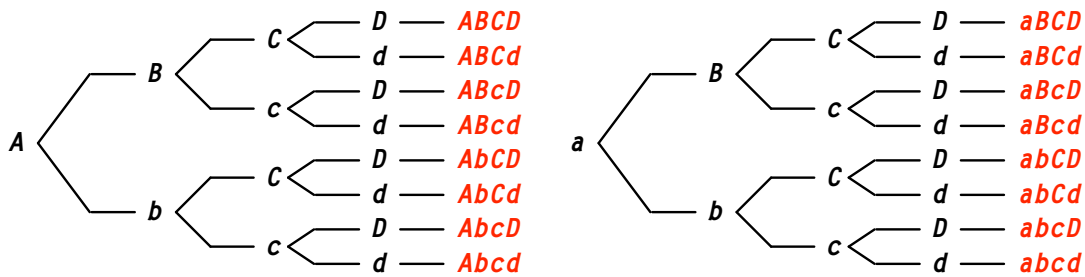


**17.** One way to attack these problems is to consider the frequencies of the gametes that the parents produce. Another way is to think about the frequencies of the progeny genotypes. Depending on the cross, one way or the other way might be easier.

**a.** First, let's solve the problem by focusing on the parents' gametes. The probability of any progeny phenotype in this cross depends only on the gamete from the heterozygous parent. The reason is that the homozygous recessive parent always provides a gamete with all recessive alleles ($a\ b\ c\ d$). A child that resembles the quadruply heterozygous parent would have the genotype $Aa\ Bb\ Cc\ Dd$. The heterozygous parent would have provided an $A\ B\ C\ D$ gamete. The frequency of $A\ B\ C\ D$ gametes is: $1/2A \times 1/2B \times 1/2C \times 1/2D = 1/16$. Thus, the chance that a child would resemble the quadruply heterozygous parent is 1/16. A child that resembles the quadruply homozygous parent would have the genotype $aa\ bb\ cc\ dd$. The heterozygous parent would have provided an $a\ b\ c\ d$ gamete, whose frequency is: $1/2a \times 1/2b \times 1/2c \times 1/2d = 1/16$. The probability that a child will resemble the quadruply homozygous recessive parent is thus 1/16. **The probability that a child will resemble either parent is then 1/16 + 1/16 = 1/8.**

Now let's solve the problem by thinking about the progeny genotypes. To resemble either parent, the progeny must have either the genotype $Aa\ Bb\ Cc\ Dd$ or $aa\ bb\ cc\ dd$. The frequency of the $Aa\ Bb\ Cc\ Dd$ genotype among the progeny is: $1/2Aa \times 1/2Bb \times 1/2Cc \times 1/2Dd = 1/16$. The frequency of the $aa\ bb\ cc\ dd$ genotype among the progeny is: $1/2aa \times 1/2bb \times 1/2cc \times 1/2dd = 1/16$. Thus, the chance that a child will resemble one or the other parent is once again $1/16 + 1/16 = 1/8$.

This cross will produce 2 different genotypes and two different characters for each gene [for example $Aa$ (dominant character) or $aa$ (recessive character)] or $2 \times 2 \times 2 \times 2 =$ **16 potential phenotypes.**


© McGraw Hill LLC. All rights reserved. No reproduction or distribution without the prior written consent of McGraw Hill LLC.

Genetics - From Genes to Genomes 8th edition Goldberg Solutions Manual

**b.** The homozygous recessive parent makes only *a b c d* gametes, and the homozygous dominant parent makes only *A B C D* gametes. Thus, all the progeny will have the genotype *Aa Bb Cc Dd* and resemble the *AA BB CC DD* parent. So, **the probability that a child will resemble one of the two parents = 1. Only one phenotype is possible in the progeny (dominant for all 4 genes).**

**c.** This problem is easiest to solve by focusing on the progeny genotypes. At each gene, a monohybrid cross is occurring, for example: *Aa* × *Aa* → 3 *A*– : 1 *aa.* The probability that a child would show the dominant character for any one gene is 3/4, so **the probability of resembling either parent for the traits associated with all four genes is $(3/4)^4 = 81/256$.** Two characters are possible for each gene, so $(2)^4 = 16$ **different kinds of progeny could potentially be produced.**

**d.** **All the progeny will resemble their parents** because all the gametes that both parents produce are *a b c d.* **So, the probability = 1.** All the progeny have the same genotype (*aa bb cc dd*) and so all the progeny the same **one phenotype** (the recessive character at all four genes).

**18. a.** The combination of alleles in the egg and sperm allows only one genotype for the zygote: ***aa Bb Cc DD Ee.***

**b.** Because the inheritance of each gene is independent, you can use the product rule to determine the number of different gamete types possible:

$1 \times 2 \times 2 \times 1 \times 2 =$ **8 types of gametes.** To figure out the genotypes of these gametes, consider the possibilities for each gene separately and then the possible combinations of genes in a consistent order. For each gene the possibilities are: *a*, (*B* : *b*), (*C* : *c*), *D*, and (*E* : *e*). This simplest way to determine all the different gamete genotypes is to use a branched-line diagram:

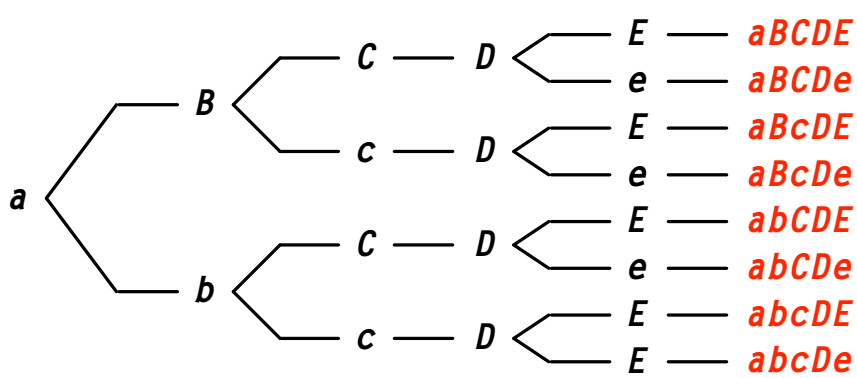


**19.** **Your friend is wrong.** As each child is an independent event, we use the product rule to determine the probability of 3 boys: **P(BBB) = 1/2 × 1/2 × 1/2 = 1/8.** The probability of 3 girls is the same: **P(GGG) = 1/8.** However, the probability of 2 boys and 1 girl is greater than 1/8 because it includes three different birth orders—BBG, BGB, and GBB—each with a probability of 1/8. Thus, we use the sum rule to determine **the probability of 2 boys and 1 girl in any order: 1/8 + 1/8 + 1/8 = 3/8. The same logic applies to 2 girls**


© McGraw Hill LLC. All rights reserved. No reproduction or distribution without the prior written consent of McGraw Hill LLC.

Genetics - From Genes to Genomes 8th edition Goldberg Solutions Manual

**and 1 boy, the probability of which is also 3/8.** Notice that because 3 boys, 3 girls, 2 boys + 1 girl, and 2 girls + 1 boy are the only options for a family of 3 children, the sum of their individual probabilities is 1 (that is, 1/8 + 1/8 + 3/8 + 3/8 = 1).

**20.** The first two parts of this problem involve the probability of occurrence of two independent traits: the sex of a child and galactosemia. The parents are heterozygous for galactosemia, so a 1/4 chance exists that a child will be affected (that is, homozygous recessive). The probability that a child is a girl is 1/2. The probability of an affected girl is therefore 1/2 × 1/4 = 1/8.

**a.** Fraternal (nonidentical) twins result from two independent fertilizations and therefore, the probability that both will be girls with galactosemia is the product of their individual probabilities (see above); 1/8 × 1/8 = **1/64**.

**b.** For identical twins, one fertilization gave rise to two individuals. The probability that both are girls with galactosemia is **1/8**.

For parts c–g, remember that each child is an independent fertilization. The sex of the children is not an issue in these parts of the problem.

**c.** Both parents are carriers (heterozygous), so the probability of having an unaffected child is 3/4. The probability of 4 unaffected children is 3/4 × 3/4 × 3/4 × 3/4 = **81/256**.

**d.** The probability that at least one child is affected is the chance of all possible outcomes except the one mentioned in part (c), which was that none of the children is affected. Thus, the probability is 1 − 81/256 = **175/256**. Note that this general strategy for solving problems, where you first calculate the probability of all outcomes <u>except</u> the one of interest, and then subtract that number from 1, is often useful for problems where direct calculation of the probability of interest is difficult.

**e.** The probability of an affected child is 1/4 while the probability of an unaffected child is 3/4. Therefore, the chance of 2 affected (A) and 2 unaffected (U) children in the order AAUU is: 1/4 ×1/4 × 3/4 × 3/4 = **9/256**.

**f.** The probability you calculated in part (e)—9/256—applies to any one family with 2 affected (A) and 2 unaffected (U) children. So, the chance of a family with 2 affected and 2 unaffected children in any order is: (The number of different ways to order 2 As and 2Us) × 9/256. In Problem 24, you'll learn about a tool called the *binomial theorem* that allows you to calculate the number of orders of two different things. Here, because the total number of things (children) is small, we can write out all the different relevant orders simply, without needing to rely on the binomial theorem:

| | |
|---|---|
| AAUU | UUAA |
| AUAU | UAUA |
| AUUA | UAAU |

So, the total chance is: 6 orders × 9/256 probability of each order = **54/256.**

**g.** The genotype of any one child is independent of all others, so the probability of an affected child is **1/4**.


© McGraw Hill LLC. All rights reserved. No reproduction or distribution without the prior written consent of McGraw Hill LLC.

Genetics - From Genes to Genomes 8th edition Goldberg Solutions Manual

**21.** Diagram the cross, where $P$ is the normal pigmentation allele and $p$ is the albino allele:

normal ($P?$) × normal ($P?$) → albino ($pp$)

A person with albinism must be homozygous recessive $pp$. The parents are normal in pigmentation and therefore could be $PP$ or $Pp$. Because they have a child with albinism, **both parents must be carriers ($Pp$). The probability that their next child will be $pp$ is therefore 1/4.**

**22.** Diagram the cross:

yellow round × yellow round → 156 yellow round : 54 yellow wrinkled

The ratio for seed shape is 156 round : 54 wrinkled = 3 round : 1 wrinkled. The 3:1 ratio denotes a monohybrid cross, so the parents must have been heterozygous ($Rr$) for the pea shape gene. All the offspring are yellow and therefore are $Yy$ or $YY$. Because no green ($yy$) progeny exist, you know at least one of the parents must have been $YY$. **The parent plants were therefore $Y-\ Rr \times YY\ Rr$.**

**23.** Diagram the cross:

smooth black ♂ × rough white ♀ → $F_1$ rough black
→ $F_2$ 8 smooth white : 25 smooth black : 23 rough white : 69 rough black

**a.** The 9:3:3:1 phenotypic ratio in the $F_2$ gives away the answer to this problem. This $F_2$ ratio tells you that the $F_1$ must be dihybrids, and that rough and black are dominant to smooth and white. Let's use the following symbols: **$R$ = rough, $r$ = smooth; $B$ = black, $b$ = white. The $F_1$ are thus $Rr\ Bb$,** and because all the $F_1$ have the same phenotype, **the parents must have been homozygotes: $rr\ BB$ (smooth, black) and $RR\ bb$ (rough, white). The $F_2$ are: $R-\ B-$ (rough black), $R-\ bb$ (rough white), $rr\ BB$ (smooth black), and $rr\ bb$ (smooth white).**

**b.** An $F_1$ male is heterozygous for both genes ($Rr\ Bb$). The smooth white $F_2$ female must be homozygous recessive ($rr\ bb$). Thus, $Rr\ Bb \times rr\ bb \rightarrow$ 1/2 $Rr$ (rough) : 1/2 $rr$ (smooth) and 1/2 $Bb$ (black) : 1/2 $bb$ (white). The inheritance of these genes is independent, so apply the product rule to find the expected phenotypic ratios among the progeny: **1/4 rough black ($Rr\ Bb$) : 1/4 rough white ($Rr\ bb$) : 1/4 smooth black ($rr\ Bb$) : 1/4 smooth white ($rr\ bb$).**

**24. a.** Diagram the cross:

$Yy\ RR \times Yy\ RR \rightarrow$ 3/4 $Y-\ RR$ (yellow round) : 1/4 $yy\ RR$ (green round)

The pod in Fig. 1.4c has 7 round peas in the following order: 4 green, 2 yellow, 1 green. As each pea comes from a separate fertilization, the chance of such a pod is: $(1/4)^4 \times (3/4)^2 \times (1/4) =$ **9/16,384.**

**b.** The probability you calculated in part (a) applies to any pod with 5 green and 2 yellow peas, but only in any one given order. So, the chance of a pod containing 5 green (G) and 2 yellow (Y) peas in any order is: (The number of different orders of 5 green and 2 yellow peas) × 9/16,384. If you try to write out all different orders of 5 green and 2 yellow peas ...


© McGraw Hill LLC. All rights reserved. No reproduction or distribution without the prior written consent of McGraw Hill LLC.

Genetics - From Genes to Genomes 8th edition Goldberg Solutions Manual

1. **YY**GGGGG
2. **Y**G**Y**GGGG
3. **Y**GG**Y**GGG
4. **Y**GGG**Y**GG
5. **Y**GGGG**Y**G
6. **Y**GGGGG**Y**
7. G**YY**GGGG
8. G**Y**G**Y**GGG

etc.

... you will realize quickly that writing down every possible order in this case is a labor-intensive task and you might miss some orders. A tool called the *binomial theorem* enables you to calculate the number of different orders of two things quickly.

The binomial theorem looks like this:

**number of orders = T! / a! × b!**

a = the number of one thing;

b = the number of the other thing;

T = a +b, which is the total number of things.

Remember that **!** means *factorial:* For example 5! = 5 × 4 × 3 × 2 × 1.

For the question at hand, a can be the number of green peas (G) and b can be the number of yellow peas (Y). So, a = 5, b = 2, and T = 7. The number of ways to order the 5 Gs and 2 Ys is:

$$7! / (5! \times 2!) = (7 \times 6 \times 5 \times 4 \times 3 \times 2 \times 1) / (5 \times 4 \times 3 \times 2 \times 1)(2 \times 1)$$
$$= (7 \times 6) / 2 = 21$$

Therefore, **the probability of the cross producing 5 green peas and 2 yellow peas in any order is 21 (orders) × 9/16,384 (the chance of any one order) = 189/16,384 ≈ 0.0115.**

**c.** As shown in the cross diagram in part (a), the Mendelian phenotypic ratio is 3 yellow : 1 green. The pod in Fig. 1.4c has a 2 yellow : 5 green phenotypic ratio. **The sample size (7 peas) is too small to expect a Mendelian ratio.** If 100 peas, for example, were examined, a ratio closer to 3:1 would be expected.

**d.** To produce both green and yellow peas, both parents must have a recessive *y* allele, and at least one parent must have a dominant *Y* allele. Therefore, in addition to the cross *Yy* × *Yy,* **the cross could also have been *yy* × *Yy*. With a sample size of 7, the Mendelian phenotypic ratio predicted is irrelevant.**

**e.** Diagram the cross: P *YY rr* (yellow, wrinkled) × *yy RR* (green, round) → $F_1$ *Yy Rr* → $F_2$ *Y– R–* (yellow, round) (plus other genotypes irrelevant to the problem)

The $F_1$ are dihybrids, and so the expected frequency of yellow, round (*Y– R–*) $F_2$ is 9/16. **The chance that all 7 peas in a pod would be *Y– R–* is $(9/16)^7 \approx 0.0178$.**



© McGraw Hill LLC. All rights reserved. No reproduction or distribution without the prior written consent of McGraw Hill LLC.

Genetics - From Genes to Genomes 8th edition Goldberg Solutions Manual

**25. a.** Diagram this dihybrid cross:

*Aa Tt* × *Aa Tt* → 9/16 *A*– *T*– (achoo, trembling) : 3/16 *aa T*–(non-achoo, trembling) : 3/16 *A*– *tt* (achoo, non-trembling) : 1/16 *aa tt* (non-achoo, non-trembling)

The chance that the first child will have achoo syndrome but lack a trembling chin (*A*– *tt*) is **3/16.**

**b.** The probability that a child would have neither dominant characteristic (*aa tt*) is **1/16**.

**26.** The $F_1$ must be heterozygous for all the genes because the parents were pure breeding (homozygous). The appearance of the $F_1$ establishes that the dominant characters for the four traits are: tall, purple flowers, axial flowers, and green pods.

**a.** If you cross two heterozygous $F_1$, both dominant and recessive characters for each trait will appear among the progeny. Thus, you expect $2 \times 2 \times 2 \times 2 = 16$ different phenotypes when considering the four traits together. The possibilities are visualized easily with a branched-line diagram:

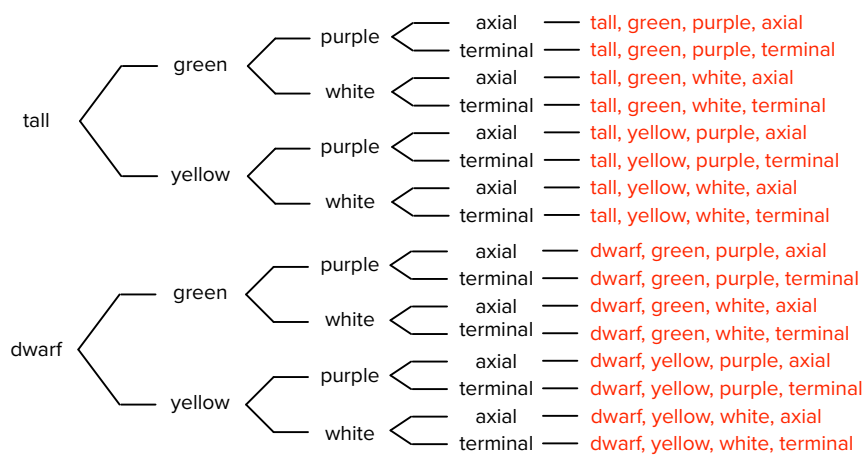


**b.** Designate the alleles: $T$ = tall, $t$ = dwarf; $G$ = green; $g$ = yellow; $P$ = purple, $p$ = white; $A$ = axial, $a$ = terminal. The cross *Tt Gg Pp Aa* (an $F_1$ plant) × *tt gg pp AA* (the dwarf parent) will produce 2 characters for the tall, green and purple genes, but only 1 character (axial) for the fourth gene or $2 \times 2 \times 2 \times 1 =$ **8 different phenotypes**. The first 3 genes will give 1 dominant : 1 recessive ratios of the characters, because this is in effect a testcross for each gene. Thus, **the proportion of each phenotype in the progeny will be $1/2 \times 1/2 \times 1/2 \times 1 = 1/8$.**

**The expected progeny will be equal numbers (1/8 each) of: tall green purple axial, tall yellow purple axial, dwarf green purple axial, dwarf yellow purple axial, tall green white axial, tall yellow white axial, dwarf green white axial, and dwarf yellow white axial**.

**27.** For each separate cross, determine the number of genes involved. Remember that the existence of 4 phenotypic classes in the progeny means that 2 genes control the phenotypes. Next, determine the phenotypic ratio for each gene separately. A 3:1 phenotypic ratio of progeny tells you which character is dominant (the 3) and that both


© McGraw Hill LLC. All rights reserved. No reproduction or distribution without the prior written consent of McGraw Hill LLC.

Genetics - From Genes to Genomes 8th edition Goldberg Solutions Manual

parents were heterozygous. In contrast, a 1:1 ratio results from a testcross where the dominant parent was heterozygous. A 9:3:3:1 ratio means that the cross is a dihybrid cross.

**a.** The 9:3:3:1 ratio of offspring indicates that this is a dihybrid cross. Therefore, color is controlled by one gene, and pod texture is controlled by a different gene. In addition, the parents were heterozygous at both genes. Because the parents are purple and spiny, we know that purple and spiny are the dominant characters. Let's designate the alleles **$P$ = purple, $p$ = white; $S$ = spiny, $s$ = smooth. The dihybrid parents were $Pp\ Ss \times Pp\ Ss$.**

**b.** The 1 spiny : 1 smooth ratio indicates a testcross for the pod texture gene. Because all progeny were purple, at least one parent plant must have been homozygous for the $P$ allele of the flower color gene. **The cross was either $PP\ Ss \times P{-}\ ss$ or $P{-}\ Ss \times PP\ ss$.**

**c.** This row is similar to part (b), but here all the progeny were spiny so at least one parent must have been homozygous for the $S$ allele. The 1 purple : 1 white testcross ratio indicates **that the parents were either $Pp\ S{-} \times pp\ SS$ or $Pp\ SS \times pp\ S{-}$.**

**d.** For color, there are 89 + 31 = 120 purple : 92 + 27 = 119 white. A 1 purple : 1 white ratio denotes a testcross. For texture, there are 89 + 92 = 181 spiny : 31 + 27 = 58 smooth, or a 3 spiny : 1 smooth ratio, indicating that the parents were both heterozygous for the $S$ gene. **The genotypes of the parents were $Pp\ Ss \times pp\ Ss$.**

**e.** A 3 purple : 1 white ratio exists among the progeny, so the parents were both heterozygous for the $P$ gene. All progeny had smooth pods, so the parents were both homozygous recessive $ss$. **The genotypes of the parents are $Pp\ ss \times Pp\ ss$.**

**f.** A 3 spiny : 1 smooth ratio exists, indicative of a cross between heterozygotes ($Ss \times Ss$). All progeny were white, so the parents must have been homozygous recessive $pp$. **The genotypes of the parents are $pp\ Ss \times pp\ Ss$.**

**28.** Three traits (each controlled by a different gene) are analyzed in this cross. While we can usually tell which alleles are dominant from the phenotype of the heterozygote, we are not told the phenotype of the heterozygote (the self-fertilizing parent) in this case. Instead, use the phenotypic ratios among the progeny for each trait to determine which allele is dominant and which is recessive for each gene. Consider height first. There are 272 + 92 + 88 + 35 = 487 tall plants and 93 + 31 + 29 + 11 = 164 dwarf plants. This is a ratio of ~3 tall : ~1 dwarf, indicating that **tall is dominant**. Next consider pod shape, where there are 272 + 92 + 93 + 31 = 488 inflated pods and 88 + 35 + 29 + 11 = 163 flat pods, or approximately 3 inflated : 1 flat, so **inflated is dominant**. Finally, consider flower color. There were 272 + 88 + 93 + 29 + 11 = 493 purple flowers and 92 + 35 + 31 + 11 = 169 white flowers, or ~3 purple : ~1 white. Thus, **purple is dominant**.

**29.** Diagram each of these crosses, remembering that you were told that tiny wings = $t$, normal wings = $T$, narrow eye = $n$, and oval (normal) eye = $N$. You thus know that one gene determines the wing character and a different gene determines the eye character, and you also know the dominance relationship between the alleles of each gene.

In cross 1, all the parents and offspring have tiny wings so all flies in this cross are $tt$.



© McGraw Hill LLC. All rights reserved. No reproduction or distribution without the prior written consent of McGraw Hill LLC.

Genetics - From Genes to Genomes 8th edition Goldberg Solutions Manual

Although both parents have oval eyes (*N*–), the eyes in the offspring are ~3 oval : ~1 narrow. This monohybrid cross ratio means that both parents are heterozygous for the eye gene (*Nn*). Thus, **the parents in cross 1 are: *tt Nn*♂ × *tt Nn*♀.**

In cross 2 consider the wings first. The male parent has normal wings (*T*–), and the female parent has tiny wings (*tt*), so this is a testcross. The offspring show a ratio of ~1 tiny : ~1 normal. Therefore, the normal-winged male parent must be heterozygous (*Tt*). For eyes, the female parent is oval (*N*–) the male parent is narrow (*nn*), so this is a testcross for the eye gene. The offspring are ~1 oval : ~1 narrow, so the oval female parent is an *Nn* heterozygote. Thus, **parents in cross 2 are: *Tt nn*♂ × *tt Nn*♀.**

In cross 3, the parents both have normal wings (*T*–) and their offspring are ~3 normal : ~1 tiny. Thus, both parents are *Tt* heterozygotes. For the eye gene, the female parent is oval (*N*–) and the male parent is narrow (*nn*), so cross 3 is a testcross. Both eye types are seen in the offspring in a ~1 normal : ~1 narrow ratio, so the female parent is heterozygous (*Nn*). **The parents in cross 3 are: *Tt nn*♂ × *Tt Nn*♀.**

When examining cross 4 you notice a monohybrid cross ratio in the offspring of ~3 normal : ~1 tiny for the wings. Thus, both normal-winged parents are *Tt.* Because the female parent has normal eyes (*N*–) and the male parent has narrow eyes (*nn*), this cross is a testcross for the eye gene. All the progeny have oval eyes, so the female parent must be homozygous *NN.* Thus, **the parents in cross 4 are: *Tt nn*♂ × *Tt NN*♀.**

**30. a.** Diagram the cross: *Tt nn* ♀ × *Tt Nn* ♂ → probability of *T– Nn?*
Analyze each gene separately: *Tt* × *Tt* will give 3/4 *T–* (normal wing) offspring. The cross *nn* × *Nn* will give 1/2 *Nn* (normal eye) offspring. To calculate the probability of the normal offspring, apply the product rule: 3/4 *T–* × 1/2 *Nn* = 3/8 *T– Nn*. Thus, **3/8 of the offspring of this cross will have normal wings and oval eyes**.

**b.** First, find the phenotypic ratio in the offspring separately for each gene. A cross of *Tt* × *Tt* → 3/4 *T–* (normal wings) : 1/4 *tt* (tiny wings). For the eyes the cross is *nn* × *Nn* → 1/2 *N–* (oval) : 1/2 *nn* (narrow). Second, applying the product rule gives 3/8 *T– N–* (normal oval) : 3/8 *T– nn* (normal narrow) : 1/8 *tt N–* (tiny oval) : 1/8 *tt nn* (tiny narrow). Finally, multiply each fraction by 200 progeny to find the expected ratio, which is **75 normal oval : 75 normal narrow : 25 tiny oval : 25 tiny narrow**.

**31. a.** **The protein specified by the pea color gene is an enzyme called Sgr, which is required for the breakdown of the green pigment chlorophyll.** (See Fig. 1.16b.)

**b.** **The *y* allele could be a null allele** because *yy* peas are green, indicating that their chlorophyll is not broken down. Indeed, scientists have determined that the *y* allele has lost its ability to specify Sgr enzyme.

**c.** The *Y* allele is dominant to *y* because in the heterozygote, the single *Y* allele will lead to the production of Sgr enzyme, even though the *y* allele cannot specify any Sgr enzyme. **The amount of the Sgr enzyme made in *Yy* heterozygotes is sufficient for yellow color.**

**d.** **In *yy* peas, the green chlorophyll cannot be broken down,** so chlorophyll pigment stays in the peas, which remain green in color.


© McGraw Hill LLC. All rights reserved. No reproduction or distribution without the prior written consent of McGraw Hill LLC.

Genetics - From Genes to Genomes 8th edition Goldberg Solutions Manual

**e.** If the amount of Sgr protein is proportional to the number of functional copies of the gene and the *y* allele is nonfunctional (null), then *YY* homozygotes should have twice the amount of Sgr protein as do *Yy* heterozygotes. Yet both *YY* and *Yy* peas are equally yellow. These observations suggest that **half the normal amount of Sgr enzyme is sufficient for the pea to break down enough chlorophyll that the pea will be yellow.**

**f.** Just as was seen in part (e), for many genes (including that for pea color), half the amount of the protein normally specified by two copies of the gene is sufficient for a normal phenotype. Thus, in most cases, even if the gene is essential, heterozygotes for null alleles will survive. **The advantage of having two copies of essential genes is then that even if one normal allele becomes mutated (changed) so that it becomes a null allele, the organism can survive because half the normal amount of gene product is usually sufficient for survival.**

**g.** **Yes, a single pea pod could contain peas with different phenotypes** because a pod is an ovary that contains several ovules (eggs), and each pea comes from a single fertilization event involving one egg and one sperm (from one pollen grain). If the female plant was *Yy* or *yy,* then it is possible that some peas in the same pod would be yellow and others green. For example, fertilization of a *y* egg with *Y* sperm would yield a yellow pea, but if the sperm was *y,* the pea would be green.

**h.** **Yes, it is possible that a pea pod could be different in color from a pea growing within it.** One reason is that, as just seen in part (g), a single pod can contain green and yellow peas; the peas in the pod are not restricted to one color. But a more fundamental reason is that one gene controls pea color, while a different gene controls the pod color. (See Fig. 1.5.)

**32.** If the alleles of the pea color and pea shape genes inherited from a parent in the P generation always stayed together and never separated, then the gametes produced by the doubly heterozygous $F_1$ individuals in Fig. 1.12 would be either *YR* or *yr.* (Note that only two possibilities would exist, and these would be in equal frequencies.) On a Punnett square (male gametes shaded in blue, female gametes in red):

| | ***Y R*** **½** | ***y r*** **½** |
|---|---|---|
| ***Y R*** **½** | *YY RR* ¼ | *Yy Rr* ¼ |
| ***y r*** **½** | *Yy Rr* ¼ | *yy rr* ¼ |

Thus, **the genotypic ratio of the $F_2$ would be 1/4 *YY RR* : 1/2 *Yy Rr* : 1/4 *yy rr.* The phenotypic ratio among the $F_2$ would be 3/4 yellow round : 1/4 green wrinkled.** You can see that if the alleles of the two genes were always inherited as a unit, you would expect the same ratios as in a monohybrid cross.


© McGraw Hill LLC. All rights reserved. No reproduction or distribution without the prior written consent of McGraw Hill LLC.

Genetics - From Genes to Genomes 8th edition Goldberg Solutions Manual

**33.** Like what you saw in Fig. 1.16, **the simplest biochemical explanation is that the dominant allele *L* specifies functional G3βH enzyme, while the recessive allele *l* is incapable of specifying any functional enzyme**. The functional enzyme can synthesize the growth hormone gibberellin, so plants with the *L* allele are tall. **Even half the normal amount of this enzyme is sufficient for tallness, explaining why *Ll* heterozygotes are tall.**

**34.** The experiment described here is like the one shown in Fig. 1.9 that verified Mendel's law of segregation. Mendel's first law predicted that among the $F_2$ of his monohybrid crosses that had the dominant phenotype, 1/3 would be homozygous for the dominant allele, and 2/3 would be heterozygous.

**a.** Mendel expected that 2/3 of the 100 $F_2$ self-fertilizations would be $Aa \times Aa$ [would give both axillary ($A-$) and terminal ($aa$) progeny] and 1/3 would be $AA \times AA$ (would give only axillary ($AA$) progeny), and those are the results that he reported. However, the fact that Mendel examined only 10 progeny of each of the 100 self-fertilizations means that **some of the $Aa \times Aa$ cases should have, by chance, resulted in only axillary ($A-$) progeny and thus should have been mistaken for $AA \times AA$ cases. So, Mendel should have found that fewer than 2/3 of the axillary $F_2$ plants would appear to be heterozygotes, and more than 1/3 would appear to be homozygotes.**

**b.** The chance that all 10 progeny from an $Aa \times Aa$ self-fertilization would be $A-$ (axillary) is $(3/4)^{10} = 0.0563 = 5.63\%$. In other words, if a self-fertilization produces 10 progeny that are all axillary, a 5.63% chance exists that the $F_2$ plant was $Aa$ and not $AA$. This fact means that we should expect that 5.63% of the $F_2$ that are actually $Aa$ would be misclassified as $AA$. Mendel's law of segregation predicts that 66.67 (2/3) of the 100 $F_2$ will be $Aa$, so $(0.0563)(66.67) \approx 3.75$ of those $F_2$ would be misclassified as $AA$. Out of 100 $F_2$, $66.67 - 3.75 = 62.92 \approx 63$ would be expected to be scored as $Aa$, and $33.33 + 3.75 = 37.08 \approx 37$ would be expected to be scored as $AA$. Thus, **Mendel should have expected a 63 $AA$ : 37 $Aa$ (or ~1.7 $AA$ : 1 $Aa$) ratio, not 2 $AA$ : 1 $Aa$.**

**c.** To determine whether an $F_3$ plant has axillary or terminal flowers requires growing seeds into adult plants. In contrast, **each $F_2$ plant could produce hundreds of peas that Mendel could have examined quickly to determine their colors and shapes. The chance that none of the hundreds of $F_3$ from a self-fertilization of a heterozygous $F_2$ plant would be homozygous is vanishingly small.** If, for example, a $Yy$ $F_2$ plant self-fertilizes, the chance that 100 progeny would all be $Y-$yellow peas is $(3/4)^{100} = 3.21 \times 10^{-13}$ or about 1 in 3.1 trillion.

**d.** **The ratio 399:201 from Mendel's data is extremely close to 2:1. You calculated in part (b) that, using his method of examining only 10 $F_3$ for every $F_2$ self-fertilization, the expected result is 1.7:1.** It has thus been suggested that Mendel (or his assistants) manipulated his results to resemble his expectations. This manipulation may have been in part subconscious; for example, the phenotype of a


© McGraw Hill LLC. All rights reserved. No reproduction or distribution without the prior written consent of McGraw Hill LLC.

Genetics - From Genes to Genomes 8th edition Goldberg Solutions Manual

few plants may not have been clear-cut, and they might have been characterized to correspond better to 2:1.

## Section 1.3

**35.** To clarify which are the dominant and recessive alleles, in answering this question we are using Mendelian symbols instead of the symbols normally used for human genotypes.

**a.** **Recessive. The trait is not seen in every generation, and in two cases (II-1 and V-2), an affected child (*aa*) had unaffected parents. Those parents (I-1 and I-2, and the consanguineous couple IV-1 and IV-2) must be carriers (*Aa*). Other unaffected individuals who must be carriers (*Aa*) are: II-3, III-1, III-2, III-3, and III-6. Individual V-1 is either a carrier (*Aa*) or homozygous for the normal allele (*AA*).**

**b.** **Dominant. The trait is seen in each generation and every affected person (*B*–) has an affected parent. Also, III-3 is unaffected (*bb*) even though both his parents are affected;** this would not be possible for a recessive trait. **All affected individuals are *Bb,* except III-4, III-5, and III-6 could be either *Bb* or *BB.*** (We do not know whether homozygotes for the dominant allele are viable.)

**c.** **Recessive. Unaffected parents (who must be *Cc*) have an affected child (*cc*)**, as in part (a). **I-2 and III-4 are affected (*cc*); everyone in generation II is a carrier (*Cc*); III-1, III-2, and III-3 could be either *CC* or *Cc;* I-1 is highly likely to be *CC* if the disease is rare.**

**36. a.** **Cutis laxa must be a recessive trait** because affected child II-4 has unaffected parents. II-4 is affected, so she must have received a disease allele (*CL*) from both parents. The mother (I-3) and the father (I-4) are both heterozygous ($CL^+CL$).

**b.** The mother of II-2 is affected and therefore is of genotype *CL CL* (I-1). II-2 herself does not have cutis laxa, but she must have received a *CL* allele from her mother. Therefore, II-2's genotype must be $CL^+CL$, meaning that **the probability that II-2 is a carrier is 100%**.

**c.** As described in part (a), both parents in this cross (I-3 and I-4) are carriers: $CL^+ CL \times CL^+CL$. The expected genotypic ratio in the children is 1 $CL^+CL^+$ : 2 $CL^+CL$ : 1 *CL CL*. However, II-3 is <u>not</u> affected, so he cannot be *CL CL*. Therefore, the remaining possibilities are 1 $CL^+ CL^+$: 2 $CL^+CL$, and so a 1/3 probability exists that he is $CL^+CL^+$, while **a 2/3 probability exists that he is a carrier ($CL^+CL$).**

**d.** As shown in part (b), II-2 must be a carrier ($CL^+CL$). To have an affected child, II-3 must also be a carrier. The probability of this is 2/3 as shown in part (c). The probability of two heterozygous parents having an affected child is 1/4. Because we're asking for all of these events to occur, we apply the product rule to these probabilities: 1 (probability that II-2 is $CL^+CL$) × 2/3 (probability that II-3 is $CL^+CL$) × 1/4 (probability of an affected child from a mating of two carriers) = 2/12 = **1/6**.


© McGraw Hill LLC. All rights reserved. No reproduction or distribution without the prior written consent of McGraw Hill LLC.

Genetics - From Genes to Genomes 8th edition Goldberg Solutions Manual

**37.** Diagram the cross as a pedigree. Remember that the affected siblings must be *CF CF*.

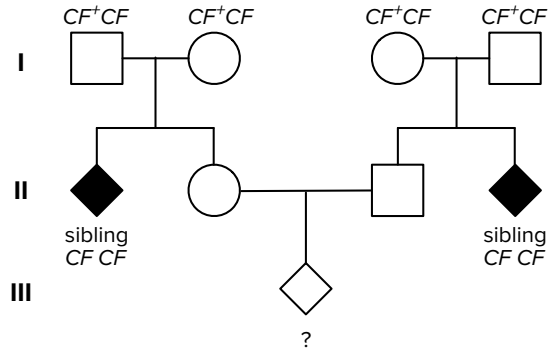


**a.** Both II-2 and II-3 have an affected sibling, so all the people in generation I must be carriers. Thus, the expected genotypic ratio in the children is 1/4 affected : 1/2 carrier : 1/4 homozygous normal. II-2 is unaffected, so she cannot be *CF CF*. The remaining possible genotypes are 2 $CF^+CF$ : 1 $CF^+CF^+$, so the probability is **2/3** that II-2 is a carrier.

**b.** The probability that II-2 × II-3 will have an affected child is 2/3 [the probability that the mother is a carrier as seen in part (a)] × 2/3 (the probability the father is a carrier using the same reasoning) × 1/4 (the probability that two carriers will produce an affected child) = 4/36 = **1/9**.

**c.** The probability that both parents are carriers and that their child will be a carrier is 2/3 × 2/3 × 1/2 = 2/9 [using the same reasoning as in part (b), except asking that the child be a carrier instead of affected]. However, $CF^+CF^+ \times CF^+CF$ parents can also have children who are carriers. There are two possible ways for this mating to occur: homozygous father × heterozygous mother or vice versa. Thus, the probability of one of these matings producing a carrier child is: 2 × 1/3 (the probability that a particular parent is $CF^+CF^+$) × 2/3 (the probability that the other parent is $CF^+CF$ × 1/2 (the probability such a mating would produce a carrier child) = 4/18 = 2/9. The probability that a child would be a carrier from either of these two scenarios (where both parents are carriers or where only one parent is a carrier) is the sum of these mutually exclusive events, or 2/9 + 2/9 = **4/9**.

**38. a.** Because the disease is rare, the affected father is most likely to be heterozygous ($HD\ HD^+$). A **1/2** chance exists that Jamal inherited the *HD* allele from his father and will develop the disease eventually (assuming he lives sufficiently long).

**b.** The probability of an affected child is: 1/2 (the probability that Jamal is $HD\ HD^+$) × 1/2 (the probability that the child inherits the *HD* allele if Jamal is $HD\ HD^+$) = **1/4**.

**39. The trait is recessive because two pairs of unaffected individuals who must be carriers (I-1 × I-2 as well as II-3 × II-4) had affected children (II-1, III-1, and III-2). Three apparently unrelated individuals must have been carriers (I-1, I-2, and II-4), so the disease allele appears to be common in the population.**


© McGraw Hill LLC. All rights reserved. No reproduction or distribution without the prior written consent of McGraw Hill LLC.

Genetics - From Genes to Genomes 8th edition Goldberg Solutions Manual

**40. a.** **The inheritance pattern seen in Fig. 1.18 could be caused by a rare dominant mutation**. In this case, the affected individuals would be heterozygous ($HD^+ HD$) and the normal individuals would be $HD^+ HD^+$. Any mating between an affected individual and an unaffected individual would give 1/2 normal ($HD^+ HD^+$) : 1/2 affected ($HD^+ HD$) children. **However, the pattern of inheritance in Fig. 1.18 could also be seen if the disease were caused by a common recessive mutation**. In the case of a common recessive mutation, all the affected individuals would be $HD\,HD$. Because the mutant allele is common in the population, most or even all the unrelated unaffected individuals could be assumed to be carriers ($HD^+ HD$). Matings between affected and unaffected individuals would then also yield phenotypic ratios of progeny of 1/2 normal ($HD^+ HD$) : 1/2 affected ($HD\,HD$).

**b.** **Determine the phenotype of the 14 children of III-6 and IV-6.** If the disease is due to a recessive allele, then III-6 and IV-6 must be homozygotes for this recessive allele, and all their children must have the disease. If the disease is due to a dominant allele, then III-6 and IV-6 must be heterozygotes (because they are affected but they each had one unaffected parent), and 1/4 of their 14 children would be expected to be unaffected.

**Alternatively, you could look at the progeny of matings between unaffected individuals in the pedigree such as III-1 and an unaffected partner.** If the disease were due to a rare dominant allele, these matings would all be homozygous recessive × homozygous recessive and would never result in affected children. If the disease is due to a recessive mutation, then many of these unaffected individuals would be carriers, and if the trait is common then at least some of the partners would also be carriers, so such matings could result in affected children.

(Such matings in this family and pedigrees from other families with Huntington disease have unambiguously established that this condition is caused by a rare dominant mutation.)

**41. a.** For the couple in generation V in Fig. 1.20a to have a child with cystic fibrosis, both would have to be carriers, meaning that they would both have to have inherited the *CF* allele from their great-great-grandfather or great-great-grand-mother in generation I. The chance that V-1 inherited the *CF* allele is: 1/2 (the chance that II-2 inherited *CF*) × 1/2 (the chance of III-2 inheriting *CF* if II-2 was a carrier) × 1/2 (the chance of IV-2 inheriting *CF* if III-2 was a carrier) × 1/2 (the chance of V-1 inheriting *CF* if IV-2 was a carrier) = 1/16. Using the same logic, the chance that V-2 inherited the *CF* allele is also 1/16. Thus, the chance that their child would be *CF CF* is 1/16 × 1/16 × 1/4 (the chance that they both give the *CF* allele to their child given that they are both carriers) = **1/1024**. The consanguineous couple in Fig. 1.20a was thus extremely unlucky in this outcome for their child.

{The fact that the couple in Fig. 1.20a actually had 4 children rather than 1 poses some interesting statistical problems that were not asked in the textbook problem. First, what is the chance that exactly 1 of their 4 children would have had cystic fibrosis? Assuming both parents are carriers [the chance of that is $(1/16)^2$], the chance of any 1 child having the disease is 1/4, and the chance of any 1 child not having the disease is 3/4. There are 4 different ways that the couple could have had 1



© McGraw Hill LLC. All rights reserved. No reproduction or distribution without the prior written consent of McGraw Hill LLC.

Genetics - From Genes to Genomes 8th edition Goldberg Solutions Manual

child with the disease: That child could have been the first, second, third or fourth one born. The probability of one of these outcomes is $1/4 \times (3/4)^3$, and thus the chance that any one of the four outcomes will occur is $4 \times 1/4 \times (3/4)^3 = 27/64$. Then, the overall chance that the couple with both be carriers and have one of these family types is $(1/16)^2 \times 27/64 = 1/256 \times 27/64 = 27/16{,}384 = 1.6875/1024$ (a bit higher than if they'd had only 1 child, but still very low).

The chance that *at least* 1 of their 4 children would have cystic fibrosis is more relevant, and it turns out the answer is just slightly higher than the chance that only 1 child would have the condition. Assuming that both parents are carriers, the chance that none of their 4 children will have the disease is $(3/4)^4$. Then, the chance that at least 1 of their children will have the disease is $1 - (3/4)^4$. (This line of thinking is called the "subtraction principle"; you have already encountered it in Problem 20d, and the concept will be useful in the next problem and elsewhere in the book.) Thus, the overall chance that at least 1 of the 4 children in the pedigree will have cystic fibrosis is $(1/16)^2$ (the chance that both parents are carriers) $\times [1 - (3/4)^4] = 1/256 \times (1 - 81/256) = 1/256 \times 175/256 = 175/65{,}536 \approx 2.734/1024$.}

**b.** Knowing that VI-4 has cystic fibrosis simplifies this problem because we know definitively that V-1 and V-2 are both carriers. The likelihood of VII-1 having the disease depends on the chance that both of her parents are carriers. The chance that her mother (VI-2) is a carrier is 2/3. The reason is that both V-1 and V-2 are carriers, so their expected progeny ratio is 1 $CF^+CF^+$ : 2 $CF^+CF$ : 1 $CF\,CF$. However, we know that VI-2 is not $CF\,CF$ (she is unaffected), which leaves 1 $CF^+CF^+$ : 2 $CF^+CF$, or a 2/3 chance that VI-2 is $CF^+CF$. The chance that her father (VI-1) is $CF^+CF$ is 1/1000. Thus, given the problem's assumptions, the chance that VII-1 would have cystic fibrosis is $2/3 \times 1/1000$ (the chance that both her parents are carriers) $\times$ 1/4 (the chance that she inherits $CF$ from both parents) = 2/12,000 = **1/6000.**

**42. a.** The pedigree diagram that describes this situation is:

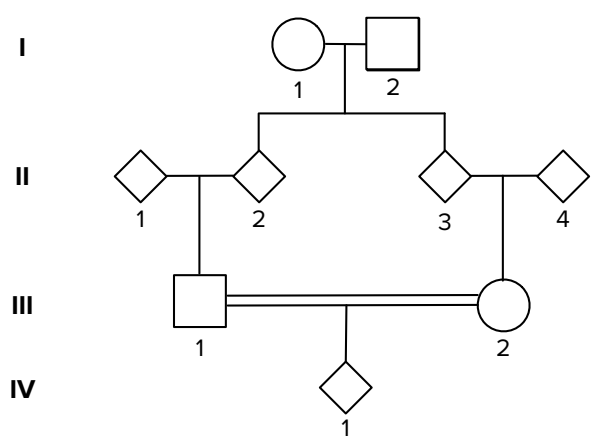


We'll use Mendelian symbols as opposed to standard human symbols here to clarify which are the dominant and which are the recessive alleles. Let's designate *a* the symbol for the recessive disease allele carried by the common grandfather (I-1) of the first cousins (III-1 and III-2), and *A* the normal allele. Similarly, let *b* be the symbol


© McGraw Hill LLC. All rights reserved. No reproduction or distribution without the prior written consent of McGraw Hill LLC.

Genetics - From Genes to Genomes 8th edition Goldberg Solutions Manual

for the recessive disease allele of a different gene carried by their common grandmother (I-2), with the normal allele *B*. The question is: What is the chance that the child of the first cousins (IV-1) would be either *aa* or *bb?*

For IV-1 to be *aa,* both first cousins (III-1 and III-2) must be *Aa,* which means that II-2 and II-3 must also both be *Aa.* The chance that II-2 inherited the *a* allele from I-1 is 1/2, and the chance that II-3 inherited the *a* allele from I-2 is also 1/2. Given that II-2 and II-3 are *Aa,* the chance that III-1 inherited II-2's *a* allele is 1/2, and the chance that III-2 inherited II-3's *a* allele is 1/2. For both first cousins to be *Aa,* all these conditions must be met, and so the probability that both first cousins are *Aa* is $1/2 \times 1/2 \times 1/2 \times 1/2 = 1/16$. As the expected frequency of *aa* from a cross of *Aa* × *Aa* is 1/4, the chance that the child of the first cousins will be *aa* is $1/16 \times 1/4 = 1/64$. By the same logic, the chance that their child will be *bb* is also 1/64. Therefore, the chance that the child of the first cousins will be either *aa* or *bb* is <u>close to</u> $1/64 + 1/64 = 2/64 = 1/32$.

The exact answer is a bit less than 1/32 because our calculation of the probability of IV-1 being *aa* included the chance of the child being *aa bb.* So did our calculation of the chance that IV-2 is *bb.* Therefore, we need to subtract one of those two *aa bb* chances. The probability that the child is *aa bb* is $1/64 \times 1/64 = 1/4096$. Thus, a more accurate estimate of the chance that the child is *aa* and/or *bb* is **1/32 – 1/4096 ≈ 1/32.25.**

**b.** This is a really difficult question, but we asked it because it's interesting to think about whether it makes sense, on genetic grounds, for first cousin marriages to be banned, which is the subject of part (c). Also, if you learn how to use the basic rules of probability to answer questions like this one, you will be a very powerful genetics problem solver!

The chance that two random people have the same recessive disease allele is $1/6{,}000 \times 1/6{,}000 = 1/36{,}000{,}000$. And if they do, the chance that their child will be homozygous for it is 1/4. Thus, the overall chance of two random people having a child homozygous for a recessive disease allele for any particular one of the 6000 disease genes is $1/4 \times 1/36{,}000{,}000 = 1/144{,}000{,}000$. The chance that the child would *not* be homozygous for *a specific one* of the 6,000 recessive genetic disease alleles is $1-(1/144{,}000{,}000) = 143{,}999{,}999/144{,}000{,}000$. (The reason is that a person is either homozygous for a particular allele or they are not—those are the only two choices; the sum of their probabilities equals 1.) The chance that their child would *not* be homozygous for a recessive disease allele at *any one* of the 6,000 loci is $(143{,}999{,}999/144{,}000{,}000)^{6000}$. (You use the product rule to determine the chance that this event happens 6000 times.) Finally, the chance that a person *would* be homozygous for *at least one* recessive disease allele is $1 - (143{,}999{,}999/144{,}000{,}000)^{6000} \approx 0.00004167 \approx$ **1/24,000.** (The reason is that every person is either homozygous for no disease gene alleles or is homozygous for at least 1 disease allele—those are the only two choices and so the sum of their probabilities is 1.)

**c.** We calculated in part (a) that the chance is ~1/32 ≈ 3% that first cousins would have a child homozygous for a particular recessive disease allele, which is about 750 times the risk that a random child would be homozygous for at least one recessive disease



© McGraw Hill LLC. All rights reserved. No reproduction or distribution without the prior written consent of McGraw Hill LLC.

Genetics - From Genes to Genomes 8th edition Goldberg Solutions Manual

allele [as calculated in part (b) ~1/24,000 ≈ .0042%]. But it's not the case that first cousins are 750 times more likely than unrelated people to have a child with birth defects. The reason is that only a small fraction of birth defects is caused by homozygosity for recessive alleles. In fact, the overall chance of serious defects at birth for any child in the U.S. is estimated to be as high as 3/100 or 3%. Children of first cousins have an additional 1/32 ≈ 3% risk due to the chance of being homozygous for a recessive disease allele. Therefore, **the increased risk for first cousins as opposed to unrelated partners of having children with birth defects is about two-fold.** (We are assuming that first-cousin matings are rare in the U.S.; one recent estimate is that 1/1000 partnerships in the U.S. are between first cousins.)

**43.** Diagram the cross by drawing a pedigree:

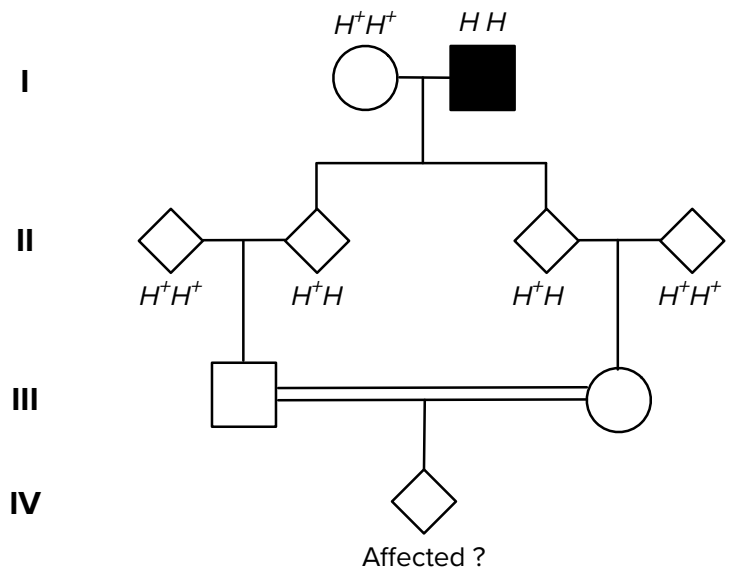


**a.** The child can be affected only if the first-cousin parents (III-1 and III-2) are both carriers. Assuming the disease is rare, the first generation is $H^+H^+$ unaffected (I-1) × $HH$ affected (I-2). Thus, both children (II-2 and II-3) must be carriers ($H^+H$). Again, assuming this trait is rare in the population, it's likely that II-1 and II-4 are homozygous normal ($H^+H^+$) because they are unrelated to I-II. Therefore, the probability that III-1 is a carrier is 1/2; III-2 has the same chance of being a carrier. Thus, the probability that a child produced by these two first cousins would be affected is 1/2 (the probability that III-1 is a carrier) × 1/2 (the probability that III-2 is a carrier) × 1/4 (the probability the child of two carriers would have an $HH$ genotype) = **1/16 = 0.0625.**

**b.** If 1 in 10 unaffected people in the population is a carrier, then the probability that II-1 and II-4 are $H^+H$ is 0.1 for each. This possibility increases the chances (slightly) that the first cousins (III-1 and III-2) are carriers. For example, III-1 can be a carrier as the result of either of two different matings: (i) II-1 homozygous normal × II-2


© McGraw Hill LLC. All rights reserved. No reproduction or distribution without the prior written consent of McGraw Hill LLC.

Genetics - From Genes to Genomes 8th edition Goldberg Solutions Manual

carrier or (ii) II-1 carrier × II-2 carrier. [Note that whether I-1 is $H^+H^+$ or $H^+H$, II-2 must be a carrier because of the normal phenotype (II-2 cannot be $HH$) and the fact that one parent was affected.]

The overall chance that III-1 is a carrier is the sum of that chance assuming each of the two different matings occurred. The probability of III-1 being a carrier is thus: [the probability of mating (i) × the probability of generating a $H^+H$ child from mating (i)] + [the probability of mating (ii) × the probability of generating an $H^+H$ child from mating (ii) = {0.9 [the probability II-1 is $H^+H^+$, which is the probability for mating (i)] × 1/2 [the probability that III-1 will inherit $H$ in mating (i)]} + {0.1 [the probability II-1 is $H^+H$, which is the probability for mating (ii)]} × {2/3 [the probability that III-1 will inherit $H$ in mating (ii); remember that III-1 is known not to be $HH$]} = 0.45 + 0.067 = 0.517.

The chance that III-2 will inherit $H$ is the same. Thus, the overall probability that IV-1 is $HH$ = [0.517 (the probability III-1 is $H^+H$) × 0.517 (the probability that III-2 is $H^+H$) × 1/4 (the probability the child of two carriers will be $HH$)] ≈ **0.067.** This number is slightly higher than the answer to part (a), which was 0.0625, so the increased likelihood that II-1 or II-4 is a carrier makes it only slightly more likely that IV-1 will be affected.

The results of this problem should prove to you that in probability calculations involving the outcomes of consanguineous matings, it makes sense to assume that people in the diagram who are unrelated genetically to the person who introduced a recessive disease allele are homozygous for the normal allele (not carriers). You just saw that when you consider a 1/10 chance that these unrelated people are carriers, it did not change your probability calculation very much. The frequency of recessive disease allele carriers in most populations is usually orders of magnitude lower than 1/10, so taking these possibilities into account is unlikely to change your calculation hardly at all. It is usually overwhelmingly more likely that related individuals who are both carriers of recessive disease alleles each inherited the allele from their common ancestor than that each of their disease alleles had different sources.

**44. a.** Both diseases are known to be rare, so unaffected people in the pedigree unrelated genetically to I-1 or I-2 are assumed to be homozygous normal. (Again, we are using Mendelian symbols as opposed to human genetics symbols here to clarify which alleles are dominant and which are recessive.) **Nail-patella (*N*) syndrome is dominant** because all affected children have an affected parent. **Alkaptonuria (*a*) is recessive** because the trait shows a horizontal pattern of inheritance and because affected children are the result of a consanguineous mating between two unaffected individuals (III-3 × III-4). Because alkaptonuria is a rare disease, it makes sense to assume that III-3 and III-4 inherited the same *a* allele from a common ancestor. Genotypes: **I-1 *nn Aa* and I-2 *Nn AA* (or I-1 *nn AA* and I-2 *Nn Aa*); II-1 *nn AA;* II-2 *nn Aa;* II-3 *Nn A–;* II-4 *nn A–;* II-5 *Nn Aa;* II-6 *nn AA;* III-1 *nn AA;* III-2 *nn A–;* III-3 *nn Aa;* III-4 *Nn Aa;* III-5 *nn A–;* III-6 *nn A–;* IV-1 *nn A–;* IV-2 *nn A–;* IV-3 *Nn A–;* IV-4 *nn A–;* IV-5 *Nn aa;* IV-6 *nn aa;* IV-7 *nn A–*.**

**b.** The cross is *nn A–* (IV-2) × *Nn aa* (IV-5). The ambiguity in the genotype of IV-2 is due to the uncertainty of his father's genotype (III-2). His parents' genotypes are


© McGraw Hill LLC. All rights reserved. No reproduction or distribution without the prior written consent of McGraw Hill LLC.

Genetics - From Genes to Genomes 8th edition Goldberg Solutions Manual

*nn AA* (II-1) × *nn A*– (II-2), so there is a 1/2 chance III-2 is *nn AA* and a 1/2 chance he is *nn Aa*. If he is *nn Aa,* there is a 1/2 chance IV-2 would have inherited his *a* allele. Therefore, the overall chance that IV-2 is *nn Aa* is 1/2 × 1/2 = 1/4, and the chance that IV-2 is *nn AA* is 3/4.

For the child to have both syndromes (*N*– *aa*), IV-2 would have to be *nn Aa.* The cross would then be *nn Aa* × *Nn aa,* and the chance of an *N*– *aa* child from this cross is 1/2 × 1/2 = 1/4. Thus, **the chance that the child would be *N*– *aa* is 1/4 (the chance that IV-2 is *nn Aa*) × 1/4 = 1/16.**

The child can have nail-patella syndrome only (*N*– *A*–) if IV-2 is *nn Aa* or *nn AA.* If the cross is *nn Aa* × *Nn aa*, the chance that the child would be *N*– *A*– (here, *Nn Aa*) is 1/2 × 1/2 = 1/4. If the cross is *nn AA* × *Nn aa*, the chance that the child is *Nn Aa* is 1/2 × 1 = 1/2. We need to add the probabilities from each circumstance to determine the chance that the child is *Nn Aa:* **[1/4 (the chance that IV-2 is *nn Aa*) × 1/4] + [3/4 (the chance that IV-2 is *nn AA*) × 1/2] = 1/16 + 3/8 = 7/16.**

For the child to have alkaptonuria only (*nn aa*), IV-2 must be *nn Aa;* the cross would be *nn Aa* × *Nn aa*. The probability of an *nn aa* child from this cross is 1/2 × 1/2 = 1/4. Thus, **the chance that the child would be *nn aa* is 1/4 (the chance that IV-2 is *nn Aa*) × 1/4 = 1/16.**

**The probability that the child would have neither defect is :**
**1 − [P(only alkaptonuria) + P(only nail-patella syndrome) + P(both defects)]**
**= 1 − (1/16 + 7/16 + 1/16) = 1 − 9/16 = 7/16.**

You can make this calculation because only the four possible outcomes exist, and you have already calculated the probabilities of three of them.

**45.** Diagram the cross(es):

| | | | | |
|---|---|---|---|---|
| midphalangeal | × | midphalangeal | → | 1853 midphalangeal : 209 unaffected |
| *M ?* | × | *M ?* | → | *M ?* : $M^+M^+$ |

The following crosses are possible:

| | | | | |
|---|---|---|---|---|
| $MM^+$ | × | $MM$ | → | all $MM$ |
| $MM^+$ | × | $MM$ | → | all $M-$ |
| $MM$ | × | $MM^+$ | → | all $M-$ |
| $MM^+$ | × | $MM^+$ | → | 3/4 $M-$ : 1/4 $M^+M^+$ |

The 209 unaffected children must have arisen from the last cross, so approximately 3 × 209 ≈ 630 children should be their *M*– siblings. Thus, about 840 of the children or **~40% came from the last mating in the list,** and the other 60% of the children (all of whom have midphalangeal hair) were the result of one or more of the other matings. This problem illustrates that much care in interpretation is required when the results of many matings in mixed populations are reported (as opposed to the results of matings where individuals have defined genotypes).

**46. a.** An equally likely possibility exists that any child produced by this couple will be affected (A) or unaffected (U). For two children, the possibilities are: A A, A U, U A, U U. The case in which only the second child is affected is U A; this is one of the four equally likely possibilities, so the probability that only the second child is affected is **1/4.**


© McGraw Hill LLC. All rights reserved. No reproduction or distribution without the prior written consent of McGraw Hill LLC.

Genetics - From Genes to Genomes 8th edition Goldberg Solutions Manual

**b.** From the list just presented in part (a), you can see that two possibilities exist in which only one child is affected: AU and UA. The probability that either of these two mutually exclusive possibilities will occur is the sum of their independent probabilities: $1/4 + 1/4 =$ **1/2.**

**c.** From the list just presented in part (a), you can see that only one possibility exists in which no child is affected: UU. The probability of this event is **1/4.**

**d.** If this family consisted of 10 children, **the case in which only the second child out of the 10 is affected** (that is, UAUUUUUUUU) **has a probability of $1/2^{10} = 1/1024 \approx 0.00098$.** This probability is based on the facts that each birth is an independent event, and that the chance of U and A are each 1/2. We thus use the product rule to determine the chance that each of those 10 independent events will occur in a particular way—one particular birth order.

In a family of ten children, 10 different outcomes (birth orders) exist that satisfy the criterion that only 1 child has the disease. Only the first child could have the disease, only the second child, only the third child, etc.:

1. **A**UUUUUUUUU
2. U**A**UUUUUUUU
3. UU**A**UUUUUUU
4. UUU**A**UUUUUU
5. UUUU**A**UUUUU
6. UUUUU**A**UUUU
7. UUUUUU**A**UUU
8. UUUUUUU**A**UU
9. UUUUUUUU**A**U
10. UUUUUUUUU**A**

We have already calculated that the chance of one of these outcomes (#2) is 1/1024. As each of the 10 possibilities has the same probability, **the probability that only one child is affected would be $10 \times (1/1024) = 10/1024 \approx 0.0098$.**

**Only one possibility exists in which no child would be affected** (UUUUUUUUUU), **and like any other specific outcome, this one has a probability of $1/1024 \approx 0.00098$.**

**e.** One way to determine the probability that four children in a family of ten will have the disease is to write down all possible outcomes for the criterion, as we did above for the second answer in part (d). Then, also as we did above, sum their individual probabilities, each of which is $(1/2)^{10}$ just as before. If you start to do this……

1. **AAA**AUUUUUU
2. **AAA**U**A**UUUUU
3. **AAA**UU**A**UUUU
4. **AAA**UUU**A**UUU
5. **AAA**UUUU**A**UU
6. **AAA**UUUUU**A**U
7. **AAA**UUUUUU**A**



© McGraw Hill LLC. All rights reserved. No reproduction or distribution without the prior written consent of McGraw Hill LLC.

Genetics - From Genes to Genomes 8th edition Goldberg Solutions Manual

8. **AA**U**AA**UUUUU
9. **AA**U**A**U**A**UUUU
10. **AA**U**A**UU**A**UUU

etc.

.....you will realize fairly quickly that writing down every possible birth order in this case is quite a difficult task and you are likely to miss some outcomes. In short—this is not a good way to find the answer! As in Problem 24b, for questions like this it is far preferable to use the binomial theorem to determine the number of possible outcomes that satisfy the criterion. The binomial theorem tells us that the number of ways to order 4 As and 6 Us is: 10! / 4! × 6! = 210. Thus, **the probability of only 4 children having the disease in a family of 10 children is $210 \times 1/2^{10} \approx 21\%$.**

**47.** **In the case of cystic fibrosis, the alleles causing the disease do not specify active protein** [in this case, the cystic fibrosis transmembrane receptor (CFTR)]. Some *CF* disease alleles specify defective CFTR proteins that do not allow the passage of chloride ions, while other *CF* disease alleles do not specify any CFTR protein at all. As you will learn in a later chapter, *CF* disease alleles of either type are called *loss-of-function* alleles. In a heterozygote, the normal $CF^+$ allele still specifies active CFTR protein, which allows for the passage of chloride ions. Because the phenotype of heterozygotes is unaffected, these individuals must have enough active CFTR protein to allow passage of enough chloride ions for the cells to function normally. Loss-of-function alleles of most genes are recessive to normal alleles for similar reasons. But it is imperative to realize that important exceptions exist in which loss-of-function mutations are dominant to normal alleles; you will see examples of these exceptions later in the book.

In the case of Huntington disease, the disease-causing allele is dominant to the normal allele. The reason is that **the mutant huntingtin protein specified by the *HD* disease allele has, in addition to its normal function** (which is not entirely understood), **a second function that is toxic to nerve cells.** This fact makes the *HD* disease allele a *gain-of-function* allele. The reason *HD* is dominant to $HD^+$ is that the protein specified by the disease allele will be toxic to cells even if the cells also contain normal huntingtin protein specified by the normal allele. Most (but again not all) gain-of-function mutations are dominant to normal alleles for similar reasons.

**48.** Like the abnormal *CF* allele that causes cystic fibrosis, the mutant *GLI3* allele that causes polydactyly is a *loss-of-function* allele—it makes no active protein. Unlike the one normal $CF^+$ allele in $CF^+CF$ heterozygotes, however, the one normal $GLI3^+$ allele in the $GLI3^+$ *GLI3* heterozygotes does not make enough protein to avoid a mutant phenotype—in the case of *GLI3,* the fingers and toes of heterozygous individuals fail to develop properly. You will learn in a later chapter of this book that genes like *GLI3* are called *haploinsufficient genes.* You have ~800 such genes in your genome, for which the amount of gene product made from one gene copy is not enough for the organism to function normally.

You might be wondering about the phenotype of *GLI3 GLI3* homozygotes. If $GLI3^+$ *GLI3* heterozygotes have polydactyly, and *GLI3* is dominant to $GLI3^+$, you should expect that *GLI3 GLI3* homozygotes would have polydactyly also. The fact is that the homozygotes die early in development, before any such individuals are born. You will


© McGraw Hill LLC. All rights reserved. No reproduction or distribution without the prior written consent of McGraw Hill LLC.

Genetics - From Genes to Genomes 8th edition Goldberg Solutions Manual

learn in the next chapter that many genes are *pleiotropic*—meaning that they control more than one trait. *GLI3* is a pleiotropic gene; it controls the number of digits and also aspects of embryonic development that are essential for viability. For the phenotype of viability, *GLI3* is recessive to *GLI3*$^+$. You will see in the next chapter that alleles like *GLI3* are called *recessive lethals.*

**49. a.** **Recessive traits that are common in the population, like red hair in Scotland, can show a vertical pattern of inheritance because recessive allele carriers and even homozygotes from outside the family will likely contribute gametes with recessive alleles to every generation.** Examples in the pedigree shown are II-1, II-4, and II-6. [However, note that not every individual in this pedigree is a product of vertical inheritance (for example, III-12 has two unaffected parents) because red hair is due to a common recessive allele as opposed to a dominant one.]

**b.** For IV-1 to have red hair, her mother (III-1) would have to be a carrier, and the chance of that is 40%. If III-1 is a carrier, the cross is $Rr$ (III-1) $\times$ $rr$ (III-2) $\rightarrow$ $r-$ (IV-1), and the chance that IV-1 is $rr$ is 1/2. Thus, the chance that child IV-1 will have red hair is $0.4 \times 1/2 = 0.2 =$ **20%.**

**c.** For IV-2 to have red hair, both III-9 and III-10 must be heterozygous ($Rr$). You know III-9 is $Rr$ because she does not have red hair, but her mother II-4 did (that is, II-4 was $rr$). Both II-5 and II-6 must be $Rr$ as they do not have red hair and they have a child who does have red hair. So, the chance that III-10 is $Rr$ is 2/3 given that he does not have red hair. (You would expect 1 $RR$ : 2 $Rr$ : 1 $rr$, but $rr$ is ruled out, leaving 1 $RR$ : 2 $Rr$.) Thus, the chance that IV-2 has red hair is 1 (chance that III-9 is a heterozygote) $\times$ 2/3 (chance that III-10 is a heterozygote) $\times$ 1/4 (chance that two $Rr$ parents have an $rr$ child) = **1/6**.


© McGraw Hill LLC. All rights reserved. No reproduction or distribution without the prior written consent of McGraw Hill LLC.

Genetics - From Genes to Genomes 8th edition Goldberg Solutions Manual