Introduction to Mechanical Engineering SI Edition 4th edition Wickert Solutions Manual

SKU: 9781305635753-SOLUTIONS

Chapter 2
Solutions

© 2017 Cengage Learning®. May not be scanned, copied or duplicated, or posted to a publicly accessible website, in whole or in part.

Introduction to Mechanical Engineering SI Edition 4th edition Wickert Solutions Manual

P2.1: Give three examples of engineered products that must be circular in shape and explain why. Any ball is not allowed as an answer!

Examples include:

- DVD's
- CD's
- manhole covers
- railroad advance warning signs
- wheel (for flat roads)
- axles
- bullet cross-section (balanced for stable flight)
- European speed limit sign
- any shape with minimized arc length/surface area for given area/volume
- optimized pressure vessel cross sections
- US coin
- lens (part of circle)
- optimal nozzle/diffuser (no edge effects)
- optimal capillary tube
- optimal suction cup
- traffic circle
- thrown pot (on potting wheel)

© 2017 Cengage Learning®. May not be scanned, copied or duplicated, or posted to a publicly accessible website, in whole or in part.

Introduction to Mechanical Engineering SI Edition 4th edition Wickert Solutions Manual

P2.2: Give three examples of engineered products that must be triangular in shape and explain why.

Examples include:

- yield signs
- the triangle instrument
- billiards rack
- knife blade (cross-section)
- supports for finishing wood (pyramids or cones, must come to a point)
- splitting wedge
- handicap ramp viewed from side (to meet code)
- three equally spaced instances per rotation cam
- 30°-60°-90° or 45°-45°-90° drafting triangle
- one of six identical pieces that can be assembled into a hexagon
- chisel point

© 2017 Cengage Learning®. May not be scanned, copied or duplicated, or posted to a publicly accessible website, in whole or in part.

Introduction to Mechanical Engineering SI Edition 4th edition Wickert Solutions Manual

P2.3: Give three examples of engineered products that must be rectangular in shape and explain why.

Examples include:

- A size (or any other standard size) sheet of paper
- Four equally spaced instances per rotation cam
- Football/soccer field (civil engineered)
- US speed limit sign
- US dollar bill

© 2017 Cengage Learning®. May not be scanned, copied or duplicated, or posted to a publicly accessible website, in whole or in part.

Introduction to Mechanical Engineering SI Edition 4th edition Wickert Solutions Manual

P2.4: Give three examples of engineered products that must be green in color.

Examples include:

- Fake plant/turf (imitate actual plant)
- John Deere product (branding)
- Cameron Compressor (branding)
- Green (traffic) light
- European recycling bin
- Kermit the frog paraphernalia (branding)

© 2017 Cengage Learning®. May not be scanned, copied or duplicated, or posted to a publicly accessible website, in whole or in part.

Introduction to Mechanical Engineering SI Edition 4th edition Wickert Solutions Manual

P2.5: Give three examples of engineered products that must be black in color.

Examples include:

- background for one way signs and night speed limit signs
- theater bins/supports (disappears in dark)
- stealth fighter (better "bounce" characteristics)
- ninja suit (stealth at night)
- black paint
- black ink
- backing for solar water heating

© 2017 Cengage Learning®. May not be scanned, copied or duplicated, or posted to a publicly accessible website, in whole or in part.

Introduction to Mechanical Engineering SI Edition 4th edition Wickert Solutions Manual

P2.6: Give three examples of engineered products that must be transparent.

Examples include:

- contact lenses (over pupil portion)
- glasses (spectacles)
- (camera) lens (any tint causes loss of quality/information)
- microscope slide and slide cover

© 2017 Cengage Learning®. May not be scanned, copied or duplicated, or posted to a publicly accessible website, in whole or in part.

Introduction to Mechanical Engineering SI Edition 4th edition Wickert Solutions Manual

P2.7: Give three examples of engineered products that have a specific minimum weight but no specified maximum weight, and specify the approximate minimum weight.

Examples include:

- helium balloon holder (minimum weight will depend upon how many helium balloons are being held)
- non-wedge based door stop (minimum weight based on friction coefficient)
- racecar (minimum weight based on racing regulations)
- competition bike (minimum weight based on racing regulations)

© 2017 Cengage Learning®. May not be scanned, copied or duplicated, or posted to a publicly accessible website, in whole or in part.

Introduction to Mechanical Engineering SI Edition 4th edition Wickert Solutions Manual

P2.8: Give three examples of engineered products that have to be precisely a certain weight, and provide the weight.

Examples include:

- balancing weight for car wheel
- coins (weight used to count coins in some automated machines)
- precious metal coins (weight dictates worth)
- exercise weights (1 kg weight must be 1 kg)

© 2017 Cengage Learning®. May not be scanned, copied or duplicated, or posted to a publicly accessible website, in whole or in part.

Introduction to Mechanical Engineering SI Edition 4th edition Wickert Solutions Manual

P2.9: Give three examples of engineered products that fulfill their designed purpose by failing or breaking.

Examples include:

- saw stop mechanism (http://www.sawstop.com/)
- crumple zone in car
- bumper (foam insert) in car
- bike helmet
- frangible bullets (split up when they hit anything other than flesh) to protect bystanders
- stress indicating paint has fluorescent dyes capsules that split under known deflections (http://www.newscientist.com/blog/invention/2007/10/stress-sensitive-paint.html)
- some meds are packaged in glass bottles that you break to open
- cover on a "pit trap" breaks when weight is applied
- fire suppression sprinkler detection device (solder connect melts or glass connection shatters)

© 2017 Cengage Learning®. May not be scanned, copied or duplicated, or posted to a publicly accessible website, in whole or in part.

Introduction to Mechanical Engineering SI Edition 4th edition Wickert Solutions Manual

P2.10: Give three examples of engineered products that are designed to work well over a million times.

Examples include:

- Roads
- Bridges
- Engine components (if each Otto cycle is a "use")
- Fuses
- Door hinges
- 3-D shutter glasses (the shutters)

© 2017 Cengage Learning®. May not be scanned, copied or duplicated, or posted to a publicly accessible website, in whole or in part.

Introduction to Mechanical Engineering SI Edition 4th edition Wickert Solutions Manual

P2.11: List three products that can be used equally well by people with and without visual impairments, and explain why.

Examples include:

- Silverware
- Chairs
- Drinking Cups
- Headphones
- Bed
- Drawers
- Emergency response necklace (one button, worn around neck to locate) http://inventorspot.com/articles/one_touch_911_dialer_calls_help_you_30719
- Sight and sound cross walk guides
- Fire alarm (day to day use, not installation and maintenance)
- Automatic doors (and other motion detectors)

© 2017 Cengage Learning®. May not be scanned, copied or duplicated, or posted to a publicly accessible website, in whole or in part.

Introduction to Mechanical Engineering SI Edition 4th edition Wickert Solutions Manual

P2.27: For the magnesium camera body pieces shown, provide an explanation for which processes you think were used in its manufacture and why.

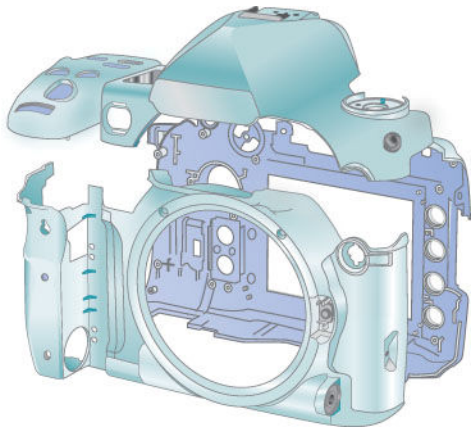

This was most likely manufactured using a die cast procedure because of the material and geometric detail in the pieces including a number of inclusions. Certain features could have been machined, and some polishing/grinding operations may have been used.

© 2017 Cengage Learning®. May not be scanned, copied or duplicated, or posted to a publicly accessible website, in whole or in part.

Introduction to Mechanical Engineering SI Edition 4th edition Wickert Solutions Manual

P2.28: For the aluminum structural member shown, provide an explanation for the processes you think were used in its manufacture and why.

This was most likely manufactured using an extrusion process because of the material and constant cross section geometry of the member. Shorter pieces could be die cast, although longer pieces are most certainly extruded. Machining could be another option for very small pieces, although machining would be much more time consuming for a part like this.

© 2017 Cengage Learning®. May not be scanned, copied or duplicated, or posted to a publicly accessible website, in whole or in part.

Introduction to Mechanical Engineering SI Edition 4th edition Wickert Solutions Manual

P2.31: Given the following components and clues, determine what product(s) they describe.

- Diesel engine
- Pulley
- Heat from friction limits the engine power that can be used
- Most components are cast iron or steel
- Most manufacturers are in Europe, Asia, and Africa
- Applied pressure can be manually adjusted
- Auger
- Africa is one place this is commonly used
- Sieve
- Operates using shear forces

These clues describe a Grain Mill (also known as a Plate Mill or Disc Mill). These kinds of small mills are very important machines for many communities in Africa as they make a labor-intensive task much easier and quicker. A picture of one such mill is given below. This is taken from a manual for such mills which can be found here: http://www.fao.org/docrep/016/j8482e/j8482e.pdf.

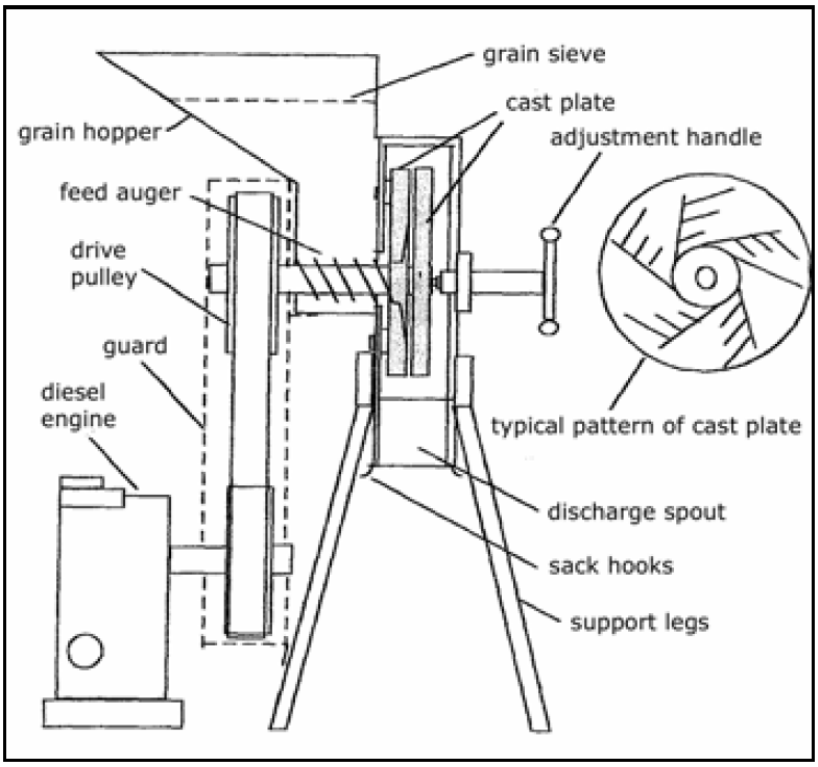

© 2017 Cengage Learning®. May not be scanned, copied or duplicated, or posted to a publicly accessible website, in whole or in part.

Introduction to Mechanical Engineering SI Edition 4th edition Wickert Solutions Manual

P2.32: Using a product currently in your possession or near you, develop ideas for how it could be re-designed to improve its function or decrease its cost. Come up with as many ideas as possible.

Depending upon the complexity and age of the product chosen, we would expect students to develop at least a dozen ideas to improve the product's function or lower its cost. They should also be as specific as possible. For instance, if a student recommends that a product's color be changed, have them state which color would they recommend and explain why.

© 2017 Cengage Learning®. May not be scanned, copied or duplicated, or posted to a publicly accessible website, in whole or in part.

Introduction to Mechanical Engineering SI Edition 4th edition Wickert Solutions Manual

P2.33*: As a group, identify a product that is at least one decade old and research the global, social, environmental, and economic factors that may have impacted its design (e.g., shape, configuration, materials, manufacturing) given its intended market, price, and function. Prepare a technical report that describes each set of factors using appropriate evidence from your research sources (e.g., the product itself, specification sheets, user manual, company website, user reviews).

This report should explain each category of factors and describe what evidence was used to determine each factor. Examples of each category for some hypothetical products are shown below:

Global
A vehicle model may be rounder and smaller because it was primarily going to be marketed in Europe where smaller cars are much more common due to the parking limitations in the urbanized populations.

Social
Many features of the product were designed to be colored green to reflect a sense of nature, health, and beauty in the consumers.

Environmental
The product contained certain chemicals in the electronics that are now understood to be significant environmental threats in landfills. However, when the product was designed and manufactured, the industry was not aware of these impacts. Such products are now either designed without these chemicals, or recycling regulations are being developed to minimize the impact on future landfills.

Economic
A product is made of a number of steel parts because it was manufactured around 2001 when the price of steel was low. The price of steel has almost tripled since then and current version of the product do not contain as much steel.

© 2017 Cengage Learning®. May not be scanned, copied or duplicated, or posted to a publicly accessible website, in whole or in part.

Introduction to Mechanical Engineering SI Edition 4th edition Wickert Solutions Manual

P2.34*: As a group, develop a list of "bad" designs that you think are inefficient, ineffective, inelegant, or provide solutions to problems that are not worth solving. These can be products, processes, systems, or services. Prepare a two minute presentation on these designs.

The more personal experience they have with their "bad" designs, the better. There are websites that are a collection of bad products, but this is not where they should find their answers. They should think about their own experiences with consumer products in all areas of their lives and reflect on which products frustrated them from a usability, cost, or functional perspective.

If the two minute presentations are required, they could be done in a single class. Also, putting a strict time limit on the presentations makes the students have to determine what the most important information is to present and how to present in a timely and effective manner. This is a critical professional skill they need to start developing.

© 2017 Cengage Learning®. May not be scanned, copied or duplicated, or posted to a publicly accessible website, in whole or in part.

Introduction to Mechanical Engineering SI Edition 4th edition Wickert Solutions Manual

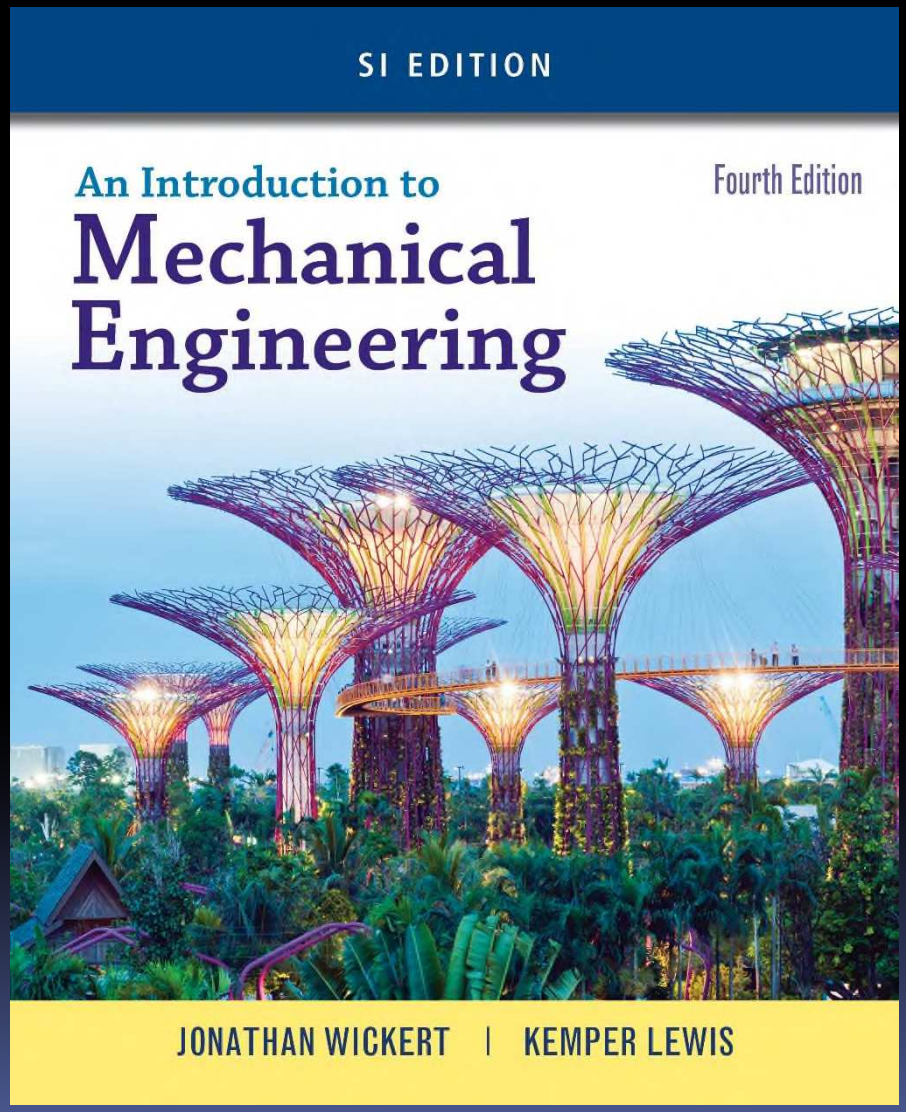

CHAPTER 2
Mechanical Design

© 2017 Cengage Learning®. May not be scanned, copied or duplicated, or posted to a publicly accessible website, in whole or in part.

Introduction to Mechanical Engineering SI Edition 4th edition Wickert Solutions Manual

Grand Engineering Challenges

Mechanical engineers will play important roles in each of these 14 challenges over the next few decades, most notably the highlighted ones. ME's will need to know and use solid design principles to be successful.

- Make solar energy economical
- Provide energy from fusion
- Develop carbon sequestration methods
- Manage the nitrogen cycle
- Provide access to clean water
- Restore and improve urban infrastructure
- Advance health informatics
- Engineer better medicines
- Reverse-engineer the brain
- Prevent nuclear terror
- Secure cyberspace
- Enhance virtual reality
- Advance personalized learning
- Engineer the tools of scientific discovery

© 2017 Cengage Learning®. May not be scanned, copied or duplicated, or posted to a publicly accessible website, in whole or in part.

Curriculum Topics

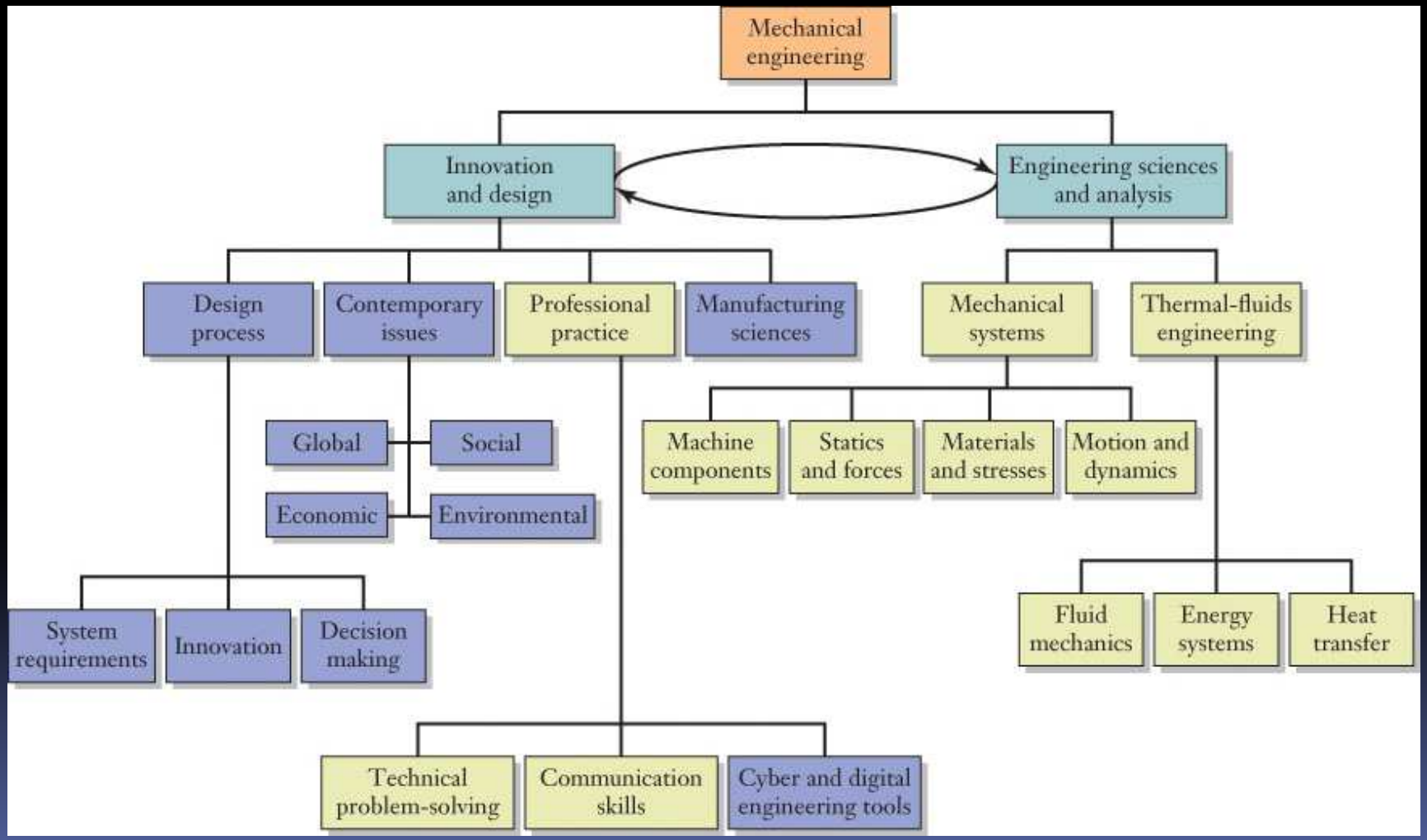

© 2017 Cengage Learning®. May not be scanned, copied or duplicated, or posted to a publicly accessible website, in whole or in part.

Focus On: Product Archaeology

Product archaeology is the process of reconstructing the life cycle of a product – the customer requirements, design specifications, and manufacturing processes used to produce it – to understand the decisions that led to its development.

1. **Preparation**: background research about a product including market research, patent searches, and benchmarking existing products.
2. **Excavation**: component description, dissection and analysis
3. **Evaluation**: benchmark existing products, conduct material and product tests.
4. **Explanation**: draw conclusions about the issues that shaped the design of the product.

© 2017 Cengage Learning®. May not be scanned, copied or duplicated, or posted to a publicly accessible website, in whole or in part.

Design Process

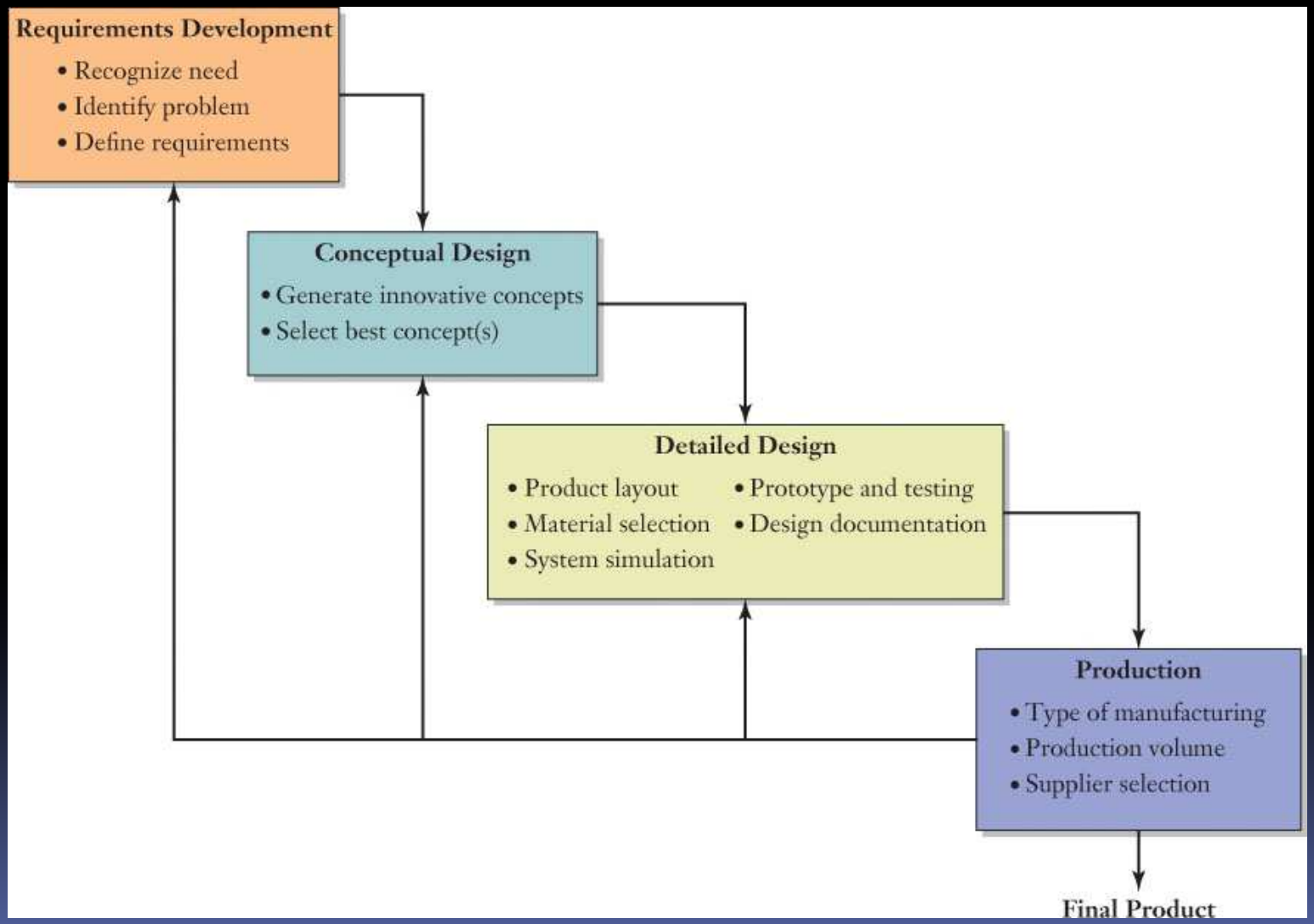

© 2017 Cengage Learning®. May not be scanned, copied or duplicated, or posted to a publicly accessible website, in whole or in part.

Requirements Development

- Initially, a design engineer will develop a comprehensive set of system requirements considering the following issues:
  - Functional performance – what the product must accomplish.
  - Environmental impact – during production, use, and retirement.
  - Manufacturing – resource and material limitations.
  - Economic issues – budget, cost, price, profit.
  - Ergonomic concerns – human factors, aesthetics, ease of use.
  - Global issues – international markets, needs, and opportunities.
  - Life cycle issues – use, maintenance, planned obsolescence.
  - Social factors – civic, urban, cultural issues.
- These requirements essentially represent the constraints that the design must eventually satisfy.

© 2017 Cengage Learning®. May not be scanned, copied or duplicated, or posted to a publicly accessible website, in whole or in part.

Conceptual Design

- Engineers work collaboratively and creatively to generate a wide range of potential solutions to the problem at hand, and then select the most promising solution(s) to develop.
- Creativity is a critical part of an engineer's job, as product design requires engineers who are part rational scientists and part innovative artists.
- A requirements list is used to eliminate infeasible or inferior designs and identify the concepts with the most potential to satisfy the requirements well.

© 2017 Cengage Learning®. May not be scanned, copied or duplicated, or posted to a publicly accessible website, in whole or in part.

Divergent and Convergent Thinking

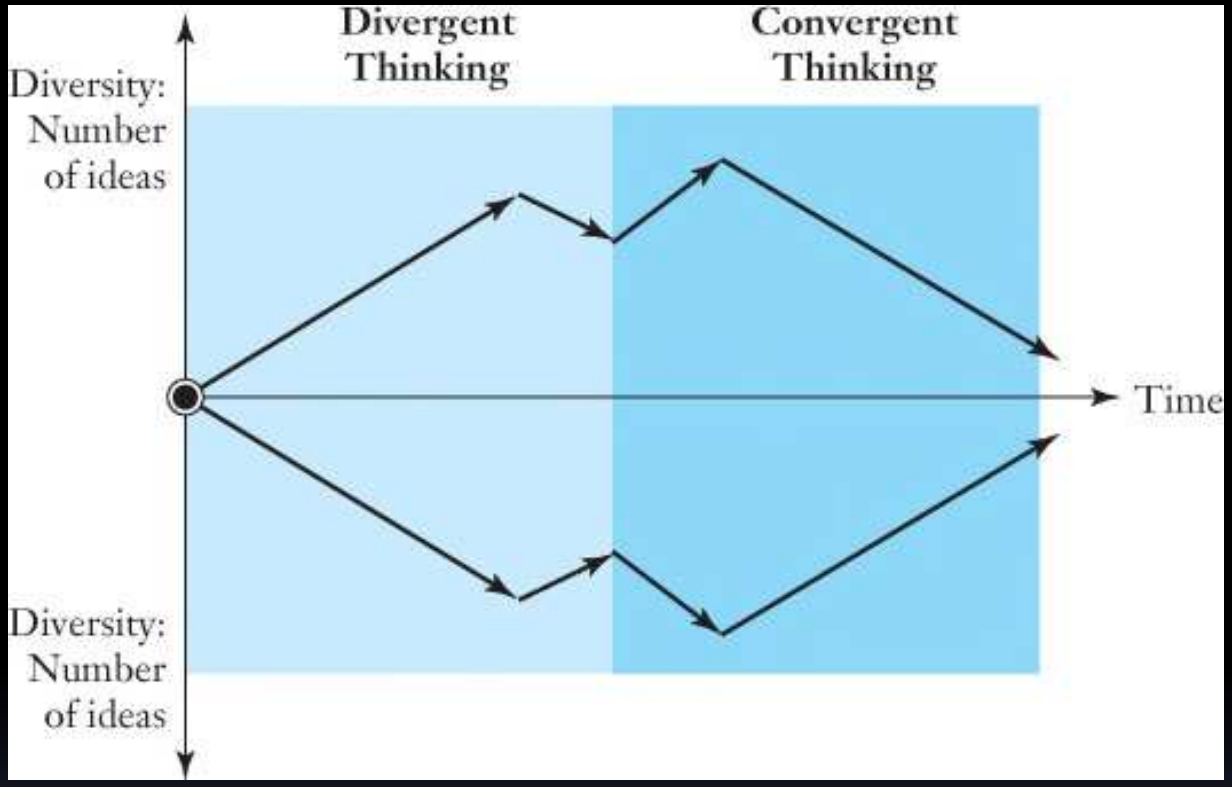

The process is guided by divergent thinking, where a diverse set of creative ideas is developed, and convergent thinking, as engineers begin to eliminate ideas and converge on the best few concepts.

© 2017 Cengage Learning®. May not be scanned, copied or duplicated, or posted to a publicly accessible website, in whole or in part.

Detailed Design

- At this point in the design process, many design and manufacturing details remain open, and each one must be resolved in order to produce the hardware for the product.
- In the detailed design of the product, a number of issues must be determined:
  - Developing product layout and configuration
  - Selecting materials for each component
  - Optimizing the final geometry, including appropriate tolerances
  - Developing completed digital models of all components and assemblies
  - Simulating the system using digital and mathematical models
  - Prototyping and testing critical components and modules
  - Developing production plans

© 2017 Cengage Learning®. May not be scanned, copied or duplicated, or posted to a publicly accessible website, in whole or in part.

Detailed Design cont.

- In detailed design a number of "Design for X" issues must also be addressed, including:
  - Design for reliability,
  - Design for manufacturing,
  - Design for assembly,
  - Design for variation,
  - Design for costing,
  - Design for recycling.
- Guiding principles in this stage are *simplicity*, *iteration*, and *usability*.

© 2017 Cengage Learning®. May not be scanned, copied or duplicated, or posted to a publicly accessible website, in whole or in part.

Focus On: Innovation

- Innovation can help develop a wide range of technologies to provide better engineered solutions.
- Considering different levels of style and technology provides a framework to strategically develop innovative products for a wide range of customers.

© 2017 Cengage Learning®. May not be scanned, copied or duplicated, or posted to a publicly accessible website, in whole or in part.

Documentation

- Engineers must diligently document the design process, engineering drawings, meeting minutes, and written reports so that others will understand the reasons behind each of the decisions made.
- A design notebook effectively captures the information and knowledge created during a design process.
- Design notebooks also help support the process of patenting new technology.
- Drawings, calculations, photographs, test data, and a listing of the dates on which important milestones were reached are important to accurately capture the development of an invention.

© 2017 Cengage Learning®. May not be scanned, copied or duplicated, or posted to a publicly accessible website, in whole or in part.

Introduction to Mechanical Engineering SI Edition 4th edition Wickert Solutions Manual

Patents

- Patents are a key aspect of the business side of engineering because they provide legal protection to those who invent new technology.
- Patents are one aspect of intellectual property, and they are a right to property, analogous to the deed for a building or a parcel of land.
- Patents are granted for a new and useful process, machine, article of manufacture, or composition of matter or for an improvement of them.

Country	Number of Patents Granted in the United States	Percentage Increase from 2000
Japan	54,170	65%
Germany	16,605	53%
South Korea	15,745	353%
Taiwan	12,118	108%
Canada	7272	85%
China (PRC)	6597	3947%
France	6555	57%
United Kingdom	6551	60%
Israel	3152	277%
Italy	2930	49%

Country	Percentage Increase from 2000
China (PRC)	3947%
India	2900%
Saudi Arabia	1158%
Poland	769%
Malaysia	389%
South Korea	353%
Czech Republic	329%
Israel	277%
Hungary	271%
Singapore	254%

Introduction to Mechanical Engineering SI Edition 4th edition Wickert Solutions Manual

Utility Patents

- Most commonly encountered in mechanical engineering, the utility patent protects the function of an apparatus, process, product, or composition of matter.
- The utility patent generally contains three main components:
  - The **specification** is a written description of the purpose, construction, and operation of the invention
  - The **drawings** show one or more versions of the invention
  - The **claims** explain in precise language the specific features that the patent protects.
- Utility patents become valid on the date the patent is granted, and in the US, recently issued ones expire 20 years after the date of the application.

© 2017 Cengage Learning®. May not be scanned, copied or duplicated, or posted to a publicly accessible website, in whole or in part.

Rapid Prototyping

- Rapid prototyping, 3D printing, and additive manufacturing enable complex three-dimensional objects to be fabricated directly from a computer-generated drawing, often in a matter of hours.
- Some rapid prototyping systems use lasers to fuse layers of a liquid polymer together (a process known as stereolithography) or to fuse raw material in powder form.
- Another prototyping technique moves a printhead to spray a liquid adhesive onto a powder and "glue-up" a prototype bit-by-bit.

© 2017 Cengage Learning®. May not be scanned, copied or duplicated, or posted to a publicly accessible website, in whole or in part.

Production

- Once the detailed design has been completed, a designer will be involved with the fabrication and production of the product.
- The fabrication techniques that an engineer selects will depend on the time and expense of setting up the tooling and machines necessary for production.
- Some systems—for instance, automobiles, air conditioners, microprocessors, hydraulic valves, and computer hard disk drives—are mass produced, a term that denotes the widespread use of mechanical automation.

© 2017 Cengage Learning®. May not be scanned, copied or duplicated, or posted to a publicly accessible website, in whole or in part.

Production cont.

The development of flexible manufacturing systems allows a production line to quickly reconfigure to different components for different vehicles.

© 2017 Cengage Learning®. May not be scanned, copied or duplicated, or posted to a publicly accessible website, in whole or in part.

Focus On: Global Design Teams

- Technological advances in simulation and virtual prototyping are making geographic separation between product design teams irrelevant, as was realized in the design and development of the Boeing 787 Dreamliner.
- Virtual prototyping allows for new prototypes to be created quickly at a potentially greatly reduced cost

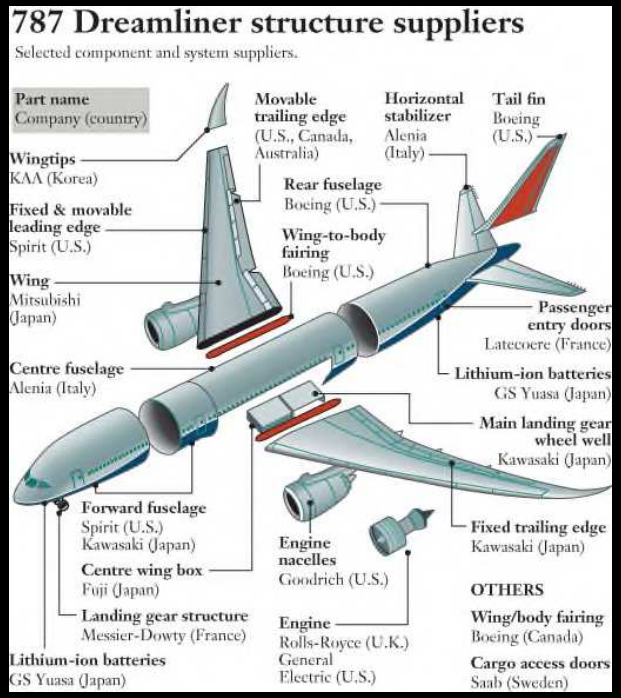

- Engineers can simulate and test many design scenarios at a fraction of the cost, allowing for changes to be made rapidly.

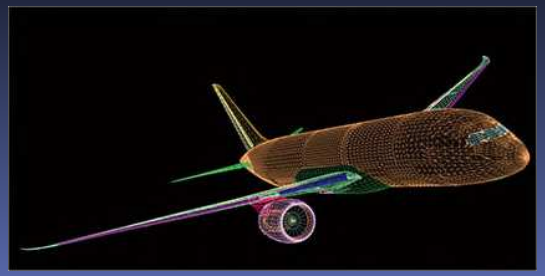

© 2017 Cengage Learning®. May not be scanned, copied or duplicated, or posted to a publicly accessible website, in whole or in part.

Manufacturing Processes

- Manufacturing technologies are economically important because they are the means for adding value to raw materials by converting them into useful products.
- There are many different manufacturing processes, and each is well suited to a particular need based on environmental impact, dimensional accuracy, material properties, and the mechanical component's shape.
- Engineers select processes, identify the machines and tools, and monitor production to ensure that the final product meets its specifications.
- The main classes of manufacturing processes are *casting, forming, machining, joining*, and *finishing*.

© 2017 Cengage Learning®. May not be scanned, copied or duplicated, or posted to a publicly accessible website, in whole or in part.

Introduction to Mechanical Engineering SI Edition 4th edition Wickert Solutions Manual

Manufacturing Processes: Casting

- *Casting* is the process in which liquid metal, such as gray iron, aluminum, or bronze, is poured into a mold, cooled, and solidified.
- Complex shapes can be produced as solid objects without the need to join any pieces together.
- Some examples of cast components include automotive engine blocks, cylinder heads, and brake rotors and drums.

© 2017 Cengage Learning®. May not be scanned, copied or duplicated, or posted to a publicly accessible website, in whole or in part.

Manufacturing Processes: Forming

- *Forming* encompasses a family of techniques in which a raw material is shaped by stretching, bending, or compression.
- Large forces are applied to plastically deform a material into its new permanent shape.
- *Rolling* is the process of reducing the thickness of a flat sheet of material by compressing it between rollers.
- *Forging* is another forming process, and it is based on the principle of heating, impacting, and plastically deforming metal into a final shape.

© 2017 Cengage Learning®. May not be scanned, copied or duplicated, or posted to a publicly accessible website, in whole or in part.

Manufacturing Processes: Forming

- *Extrusion* is used to create long straight metal parts with their cross sections having round, rectangular, L-, T-, or C-shapes, for instance.
- In extrusion, a mechanical or hydraulic press is used to force heated metal through a tool (called a die) that has a tapered hole ending in the shape of the finished part's cross section.
- Conceptually, the process of extrusion is not unlike the familiar experience of squeezing toothpaste out of a tube.

© 2017 Cengage Learning®. May not be scanned, copied or duplicated, or posted to a publicly accessible website, in whole or in part.

Manufacturing Processes: Machining

- *Machining* refers to processes in which a sharp metal tool removes material by cutting it.
- The most common machining methods are drilling, sawing, milling, and turning.
- Machining operations are capable of producing mechanical components with dimensions and shapes that are far more precise than their cast or forged counterparts.

© 2017 Cengage Learning®. May not be scanned, copied or duplicated, or posted to a publicly accessible website, in whole or in part.

Machining Tools: Drill Press

- The drill press shown is used to bore round holes into a workpiece.
- A drill bit is held in the rotating chuck, and as a machinist turns the pilot wheel, the bit is lowered into the workpiece's surface.

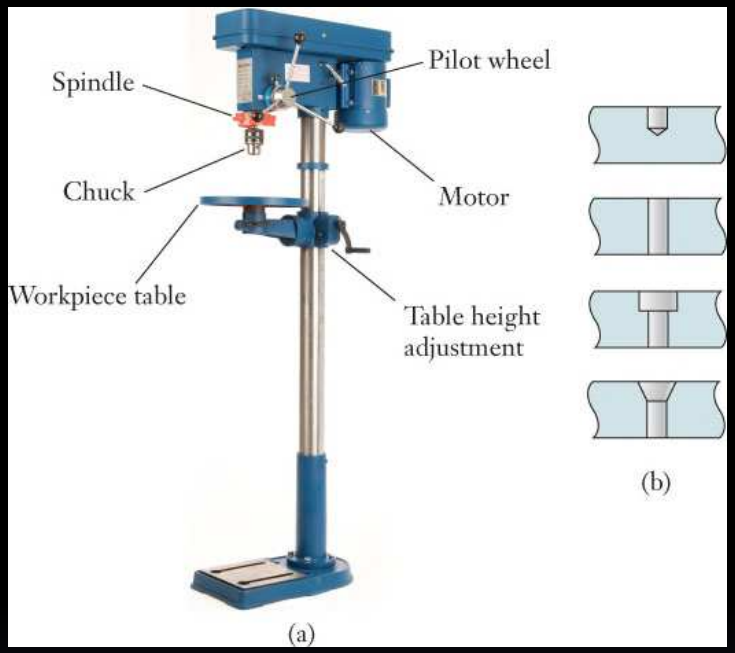

- For safety reasons, vises and clamps are used to hold the workpiece securely and to prevent material from shifting unexpectedly.

© 2017 Cengage Learning®. May not be scanned, copied or duplicated, or posted to a publicly accessible website, in whole or in part.

Manufacturing Processes: Joining and Finishing

- *Joining* operations are used to assemble subcomponents into a final product by welding, soldering, riveting, bolting, or adhesively bonding them.
  - Many bicycle frames, for instance, are welded together from individual pieces of metal tubing.
- *Finishing* steps are taken to treat a component's surface in order to make it harder, improve its appearance, or protect it from the environment.
  - Some finishing processes include polishing, electroplating, anodizing, and painting.

© 2017 Cengage Learning®. May not be scanned, copied or duplicated, or posted to a publicly accessible website, in whole or in part.

Introduction to Mechanical Engineering SI Edition 4th edition Wickert Solutions Manual

Manufacturing Tools: Band Saw

- A machinist will use a band saw to make rough cuts through metal.
- The blade is a long, continuous loop that has sharp teeth on one edge, and it rides on the drive and idler wheels.

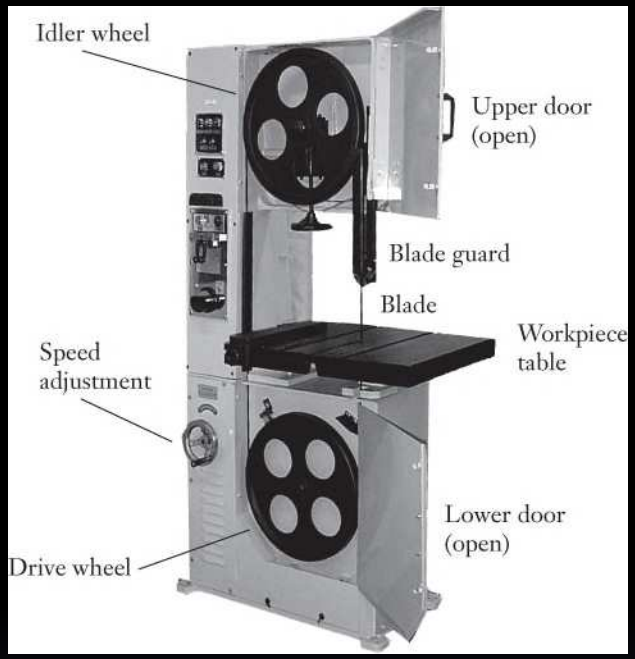

- A variable-speed motor enables the operator to adjust the blade's speed depending on the type and thickness of the material being cut.

© 2017 Cengage Learning®. May not be scanned, copied or duplicated, or posted to a publicly accessible website, in whole or in part.

Manufacturing Tools: Milling Machine

- A milling machine (or mill) is used for machining the rough surfaces of a workpiece flat and smooth, and for cutting slots, grooves, and holes.
- The milling machine is a versatile machine tool in which the workpiece is moved slowly relative to a rotating cutting tool.

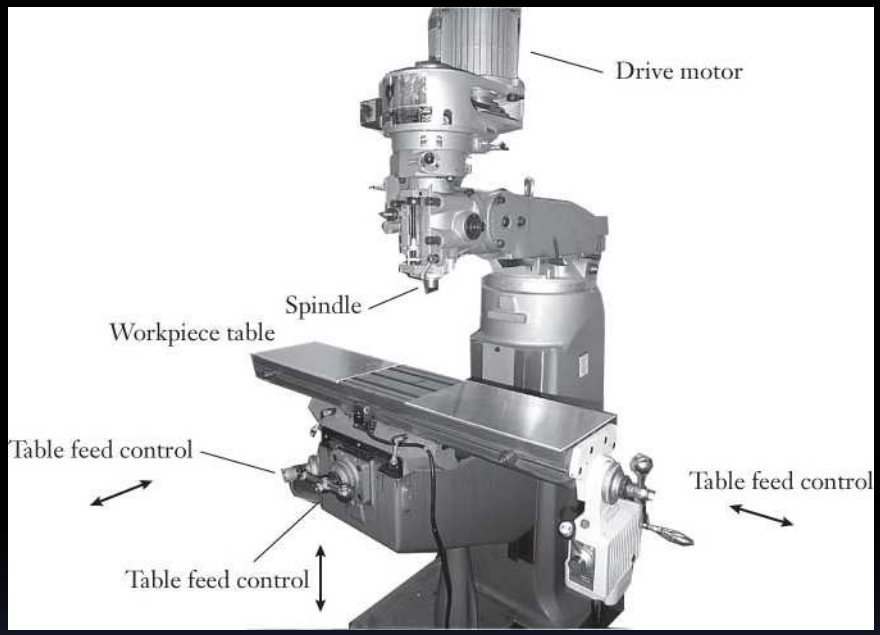

- The workpiece is held by a vise on an adjustable table so that the part can be accurately moved in three directions.

© 2017 Cengage Learning®. May not be scanned, copied or duplicated, or posted to a publicly accessible website, in whole or in part.

Manufacturing Tools: Lathe

- A lathe holds a workpiece and rotates it about the centerline as a sharpened tool removes chips of material.
- The lathe is used to produce cylindrical shapes and other components that have an axis of symmetry.
- Threads, shoulders that locate bearings on a shaft, and grooves for holding retaining clips can each be made using a lathe.

© 2017 Cengage Learning®. May not be scanned, copied or duplicated, or posted to a publicly accessible website, in whole or in part.

Manufacturing Tools: Numerical Control

- Computer-aided manufacturing uses computers to control machine tools to cut and shape materials to remarkable precision.
- Machining operations are controlled by a computer when high precision is required, or when a repetitive task must be performed on a large scale.
- Computer-controlled machine tools offer the potential to produce physical hardware seamlessly from a computer-generated drawing.

© 2017 Cengage Learning®. May not be scanned, copied or duplicated, or posted to a publicly accessible website, in whole or in part.

Summary

- Engineers reduce an open-ended problem into a sequence of manageable steps:
  - Defining system requirements,
  - Conceptual design where concepts are generated and narrowed down, and
  - Detailed design where all the geometric, functional, and production details of a product are developed.
- Engineering is ultimately a business venture, and you should be aware of that broader context in which mechanical engineering is practiced.
- In the end, successful design is a function of creativity, elegance, usability, and cost.

© 2017 Cengage Learning®. May not be scanned, copied or duplicated, or posted to a publicly accessible website, in whole or in part.

Introduction to Mechanical Engineering SI Edition 4th edition Wickert Solutions Manual

Summary cont.

- Throughout design, engineers use their judgment and make order-of-magnitude calculations to move ideas to concepts and concepts to detailed designs.

- Mechanical engineers also specify the methods that will be used to produce hardware, and those decisions are based on the quantity that will be produced, the allowable cost, and the level of precision necessary.

© 2017 Cengage Learning®. May not be scanned, copied or duplicated, or posted to a publicly accessible website, in whole or in part.