MIS 7th edition Bidgoli Solutions Manual

SKU: 9781305667570-SOLUTIONS

Chapter 2
Computers: The Machines behind Computing

Learning Objectives

- Define a computer system, and describe its components.
- Discuss the history of computer hardware and software.
- Explain the factors distinguishing the computing power of computers.
- Summarize computer operations.
- Discuss the types of input, output, and memory devices.
- Explain how computers are classified.
- Describe the two major types of software.
- List the generations of computer languages.

Detailed Chapter Outline

I. Defining a Computer

A **computer** is defined as a machine that accepts data as input, processes data without human intervention by using stored instructions, and outputs information. The instructions, also called a *program*, are step-by-step directions for performing a specific task, written in a language the computer can understand. If data is erroneous, the information the computer provides is also erroneous. This rule is sometimes called GIGO: garbage in, garbage out.

Many computer languages are available; the language an individual selects depends on the problem being solved and the type of computer he or she is using. Regardless of the language, a program is also referred to as the *source code*. This source code must be translated into object code—consisting of binary 0s and 1s. Binary code—a set of instructions used to control the computer—uses 0s and 1s, which the computer understands as on or off signals.

A. Components of a Computer System

A computer system consists of hardware and software. Hardware components are physical devices, such as keyboards, monitors, and processing units. The software component consists of programs written in computer languages. Input devices, such as keyboards, are used to send data and information to the computer. Output devices, such as monitors and printers, display the output a computer generates.

The **central processing unit (CPU)** is the heart of a computer. It is divided into two components: the **arithmetic logic unit (ALU)** and the **control unit**. Some computers have a single processor; other computers, called *multiprocessors*, contain multiple processors. Multiprocessing is the use of two or more CPUs in a single computer system.

In recent years, multicore processors have been introduced. A quad-core processor contains four cores, a hexa-core processor contains six cores, and an octa-core processor contains eight cores. These new chips are making computers faster than their predecessors. Another component that affects computer performance is a **bus**, which is the link between devices connected to the computer. A bus can be parallel or serial, internal (local) or external. Other factors that affect computer performance include the processor size and the operating system (OS).

A **disk drive** is a peripheral device for recording, storing, and retrieving information. A **CPU case** is the enclosure containing the computer's main components. A **motherboard** is the main circuit board containing connectors for attaching additional boards. In addition, it usually contains the CPU, Basic Input / Output System (BIOS), memory, storage, interfaces, serial and parallel ports, expansion slots, and all the controllers for standard peripheral devices, such as the display monitor, disk drive, and keyboard.

A serial port is a communication interface through which information is transferred one bit at a time; a parallel port is an interface between a computer and a printer that enables the computer to transfer multiple bits of information to the printer simultaneously.

In-Class Activity

Ask students to list the different components of a computer system. Students can also list the technical specifications (processor speed, RAM, size of the hard disk) of their personal computers.

Discussion Question

Discuss the two components of a CPU.

II. The History of Computer Hardware and Software

Computers are often categorized into "generations" that mark technological breakthroughs.

Beginning in the 1940s, first-generation computers used vacuum tube technology. They were bulky and unreliable, generated excessive heat, and were difficult to program. Second-generation computers used transistors and were faster, more reliable, and easier to program and maintain. Third-generation computers operated on integrated circuits, which enabled computers to be even smaller, faster, more reliable, and more sophisticated. Remote data entry and telecommunications were introduced during this generation.

Fourth-generation computers continued several trends that further improved speed and ease of use: miniaturization, very-large-scale integration (VLSI) circuits, widespread use of personal computers, and optical discs (discs written or encoded and read using a laser optical device). The current fifth-generation computers include parallel processing (computers containing hundreds or thousands of CPUs for rapid data processing), gallium arsenide chips that run at higher speeds and consume less power than silicon chips, and optical technologies.

Computer designers have concentrated on technology using gallium arsenide because silicon cannot emit light and has speed limitations. However, the major problems with gallium arsenide are difficulties in mass production. This material is softer and more fragile than silicon, so it breaks more easily during slicing and polishing.

In October 2012, IBM announced that it will start using carbon nanotubes (CNTs) instead of silicon in its computer chips. It is one of the methods that should keep chip sizes shrinking after the current silicon-based technology has reached its limit. Optical computing is in its infancy, and more research is needed to produce a full-featured optical computer. Nevertheless, storage devices using this technology are revolutionizing the computer field by enabling massive amounts of data to be stored in very small spaces. Computer languages and software have also developed through five generations.

In-Class Activity

Prior to class, ask students to read an article related to the history of computer hardware and software. During class, ask them to write a report based on the article they read.

Discussion Question

Discuss the evolution of technologies in the first- to fifth-generation computers.

III. The Power of Computers

MIS 7th edition Bidgoli Solutions Manual

Computers draw their power from three factors that far exceed human capacities: speed, accuracy, and storage and retrieval capabilities.

A. Speed

Computers process data with amazing speed. Today's high-speed computers make it possible for knowledge workers to perform tasks much faster than with the slower computers of the past. Typically, computer speed is measured as the number of instructions performed during the following fractions of a second:

- Millisecond: 1/1,000 of a second
- Microsecond: 1/1,000,000 of a second
- Nanosecond: 1/1,000,000,000 of a second
- Picosecond: 1/1,000,000,000,000 of a second

B. Accuracy

Unlike humans, computers do not make mistakes. To understand computer accuracy more clearly, take a look at these two numbers:

- 4.000000000000000000000001
- 4.000000000000000000000002

To humans, these two numbers are so close that they are usually considered equal. To a computer, however, these two numbers are completely different. This degree of accuracy is critical in many computer applications. On a space mission, for example, computers are essential for calculating reentry times and locations for space shuttles. A small degree of inaccuracy could lead the space shuttle to land in Canada instead of the United States.

C. Storage and Retrieval

Storage means saving data in computer memory, and retrieval means accessing data from memory. Computers can store vast quantities of data and locate a specific item quickly, which makes knowledge workers more efficient in performing their jobs. In computers, data is stored in bits. A bit is a single value of 0 or 1, and 8 bits equal 1 byte. A byte is the size of a character. Every character, number, or symbol on the keyboard is represented as a binary number in computer memory. A binary system consists of *0*s and *1*s, with a 1 representing "on" and a 0 representing "off."

Computers and communication systems use data codes to represent and transfer data between computers and network systems. The most common data code for text files, PC applications, and the Internet is American Standard Code for Information Interchange (ASCII), developed

by the American National Standards Institute.

In-Class Activity

Ask students to differentiate between the various data codes.

Discussion Question

How does a computer store data in its memory?

IV. Computer Operations

Computers can perform three basic tasks: arithmetic operations, logical operations, and storage and retrieval operations. All other tasks are performed using one or a combination of these operations.

Computers can add, subtract, multiply, divide, and raise numbers to a power (exponentiation). Computers can perform comparison operations by comparing two numbers. For example, a computer can compare *x* to *y* and determine which number is larger. Computers can also store massive amounts of data in very small spaces and locate a particular item quickly.

In-Class Activity

Ask students to give examples related to how computers can store massive amounts of data in very small spaces and locate a particular item quickly.

Discussion Question

Describe the three computer operations: arithmetic, logical, and storage and retrieval operations. Give examples for each operation.

V. Input, Output, and Memory Devices

To use a computer and process data, three major components are needed: input, output, and memory devices.

A. Input Devices

Input devices send data and information to the computer. They are constantly being improved to make data input easier. Examples of input devices include:

- *Keyboard*—this is the most widely used input device. Originally, keyboards were designed to resemble typewriters, but several modifications have been made to improve their ease of use.
- *Mouse*—this pointing device moves the cursor on the screen, allowing fast, precise cursor positioning. With programs that use graphical interfaces, such as Microsoft Windows or Mac OS, the mouse has become the input device of choice.
- *Touch screen*—this is a combination of input devices, usually working with menus. Some touch screens rely on light detection to determine which menu item has been selected; others are pressure sensitive.
- *Light pen*—this is a light-sensitive stylus connected to the monitor with a cable. When it is placed on an on-screen location, the data in that spot is sent to the computer.
- *Trackball*—this is kept in a stationary location, but it can be rolled on its axis to control the on-screen cursor. Trackballs occupy less space than a mouse, so they are ideal for notebook computers.
- *Data tablet*—this consists of a small pad and a pen. Menus are displayed on the tablet, and one can make selections with the pen.
- *Barcode reader*—this is an optical scanner that uses lasers to read codes in bar form. These devices are fast and accurate and have many applications in inventory, data entry, and tracking systems.
- *Optical character reader (OCR)*—this works on the same principle as a barcode reader but reads text instead. OCRs must be able to recognize many special characters and distinguish between uppercase and lowercase letters.
- *Magnetic ink character recognition (MICR) system*—this reads characters printed with magnetic ink and is used primarily by banks for reading the information at the bottom of checks.
- *Optical mark recognition (OMR) system*—this is sometimes called a "mark sensing" system because it reads marks on paper.

B. Output Devices

Many **output devices** are available for both mainframes and personal computers. Output displayed on a screen is called "soft copy." The most common output devices for soft copy are cathode ray tube (CRT), plasma display, and liquid crystal display (LCD).

The other type of output is "hard copy," for which the most common output device is a

printer. Inkjet and laser printers are standard printers used today. Inkjet printers produce characters by projecting onto paper electrically charged droplets of ink that create an image. High-quality inkjet printers use multicolor ink cartridges for near-photo quality output and are often used to print digital photographs.

Laser printers use laser-based technology that creates electrical charges on a rotating drum to attract toner. The toner is fused to paper using a heat process that creates high-quality output. Other output devices include plotters for converting computer output to graphics and voice synthesizers for converting computer output to voice.

C. Memory Devices

Two types of memory are common to any computer: main memory and secondary memory. **Main memory** stores data and information and is usually volatile, meaning its contents are lost when electrical power is turned off. **Secondary memory**, which is nonvolatile, holds data when the computer is off or during the course of a program's operation. It also serves as archival storage. Main memory plays a major role in a computer's performance; to some extent, the more memory a computer has, the faster and more efficient its input/output (I/O) operations are.

Main Memory Devices

The most common type of main memory is a semiconductor memory chip made of silicon. A semiconductor memory device can be volatile or nonvolatile. Volatile memory is called **random access memory (RAM)**, although one could think of it as "read-write memory."

A special type of RAM, called **cache RAM**, resides on the processor. Because memory access from main RAM storage generally takes several clock cycles (a few nanoseconds), cache RAM stores recently accessed memory so the processor is not waiting for the memory transfer.

Nonvolatile memory is called **read-only memory (ROM)**; data cannot be written to ROM. The type of data usually stored in ROM includes BIOS information and the computer system's clock. There are two other types of ROM: Programmable read-only memory (PROM) and Erasable programmable read-only memory (EPROM).

Secondary Memory Devices

Secondary memory devices are nonvolatile and used for storing large volumes of data for long periods. There are three main types: magnetic disks, magnetic tape, and optical discs.

MIS 7th edition Bidgoli Solutions Manual

Large enterprises also use storage area networks and network-attached storage for storing massive amounts of data in a network environment.

A **magnetic disk**, made of Mylar or metal, is used for random-access processing. In other words, data can be accessed in any order, regardless of its order on the surface. **Magnetic tape**, made of a plastic material, resembles a cassette tape and stores data sequentially. Records can be stored in a block or separately, with a gap between each record or block, called the inter-record gap (IRG). **Optical discs** use laser beams to access and store data. Optical technology can store vast amounts of data and is durable. Three common types of optical storage are CD-ROMs, WORM discs, and DVDs.

CD-ROMs are easy to duplicate and distribute and are widely used in large permanent databases, such as for libraries, real estate firms, and financial institutions. They are sometimes used for multimedia applications and to distribute software products. However, because of its larger capacity, digital versatile disc read-only memory (DVD-ROM) is used more often now, particularly for software distribution. A write once, read many (WORM) disc is also a permanent device. Information can be recorded once and cannot be altered. A major drawback is that a WORM disc cannot be duplicated.

Other secondary memory devices include hard disks, USB flash drives, and memory cards. A **redundant array of independent disks (RAID)** system is a collection of disk drives used for fault tolerance and improved performance, and is typically found in large network systems. Data can be stored in multiple places to improve the system's reliability. **Cloud storage** has become a popular option for many organizations and individuals in recent years. Used for online storage and backup, it involves multiple virtual servers that are usually hosted by third parties.

Storage Area Networks and Network-Attached Storage

A **storage area network (SAN)** is a dedicated high-speed network consisting of both hardware and software used to connect and manage shared storage devices, such as disk arrays, tape libraries, and optical storage devices. A SAN network makes storage devices available to all servers on a local area network (LAN) or wide area network (WAN).

SANs speed up data access performance, and despite their cost, they are more economical than having storage devices attached to each server. A SAN's capacity can be extended easily, even to hundreds of terabytes. **Network-attached storage (NAS)**, on the other hand, is essentially a network-connected computer dedicated to providing file-based data storage services to other network devices. Software on the NAS handles features such as data storage, file access, and file and storage management.

MIS 7th edition Bidgoli Solutions Manual

When choosing between a SAN and a NAS system, consider the following factors:

- Hybrid solutions (combining a SAN and a NAS) might be available.
- A SAN offers only storage; a NAS system offers both storage and file services.
- NAS is popular for Web servers and e-mail servers because it lowers management costs and helps make these servers more fault tolerant. It is also becoming a useful solution for providing large amounts of heterogeneous data for consumer applications.
- The biggest issue with NAS is that, as the number of users increases, its performance deteriorates. However, it can be expanded easily by adding more servers or upgrading the CPU.

Current trend in I/O devices could be summarized as:

- Thinner and lighter laptops and tablets
- Faster and larger memory
- Widespread applications of wireless devices
- Increased applications of interactive computing using gesture, touch, and voice

In-Class Activity

Ask students to graphically represent the subdivisions of the three major components needed to use a computer and process data.

Discussion Question

Distinguish between a storage area network (SAN) and a network-attached storage (NAS).

VI. Classes of Computers

Usually, computers are classified based on cost, amount of memory, speed, and sophistication. Using these criteria, computers are classified as subnotebooks, notebooks, personal computers, minicomputers, mainframes, or supercomputers. Supercomputers are the most powerful; they also have the highest storage capabilities and the highest price.

Mainframe computers are usually compatible with the IBM System/360 line introduced in 1965. Systems that are not based on System/360 are referred to as “servers” or supercomputers. Supercomputers are more expensive, much bigger, faster, and have more memory than personal computers, minicomputers, and mainframes.

Applications for computers include anything from doing homework (subnotebook, notebook, and personal computer) to launching space shuttles (supercomputer). Because all computers are steadily increasing in speed and sophistication, delineating different classes of computers is more difficult now. Experts believe that the era of wearable, ubiquitous computing is fast approaching.

A. Server Platforms: An Overview

A **server** is a computer and all the software for managing network resources and offering services to a network. Many different server platforms are available for performing specific tasks, including the following:

- *Application servers* store computer software, which users can access from their workstations.
- *Database servers* store and manage vast amounts of data for access from users' computers.
- *Disk server*s contain large-capacity hard drives and enable users to store files and applications for later retrieval.
- *Fax servers* contain software and hardware components that enable users to send and receive faxes.
- *File servers* contain large-capacity hard drives for storing and retrieving data files.
- *Mail servers* are configured for sending, receiving, and storing e-mails.
- *Print servers* enable users to send print jobs to network printers.
- *Remote access servers (RAS*) allow off-site users to connect to network resources, such as network file storage, printers, and databases.
- *Web servers* store Web pages for access over the Internet.

In-Class Activity

Ask students to write a list of different server platforms and the specific tasks that each of these servers perform. Then divide them into pairs. Each one can then evaluate the other's work. Finally, they can refer to the text and discuss the errors they made.

Discussion Question

Discuss three examples of ubiquitous computing other than those mentioned in the text.

VII. What is Software?

Software is all the programs that run a computer system. It can be classified broadly as system software and application software. For example, Microsoft Windows is the OS for most PCs and belongs to the system software group. This type of software works in the background and takes care of housekeeping tasks, such as deleting files that are no longer needed. Application software is used to perform specialized tasks. Microsoft Excel, for example, is used for spreadsheet analyses and number-crunching tasks.

A. Operating System Software

An **operating system (OS)** is a set of programs for controlling and managing computer hardware and software. It provides an interface between a computer and the user and increases computer efficiency by helping users share computer resources and by performing repetitive tasks for users.

Control programs manage computer hardware and resources by performing the following functions:

- *Job management*—control and prioritize tasks performed by the CPU.
- *Resource allocation*—manage computer resources, such as storage and memory. In a network, control programs are also used for tasks, such as assigning a print job to a particular printer.
- *Data management*—control data integrity by generating checksums to verify that data has not been corrupted or changed.
- *Communication*—control the transfer of data among parts of a computer system, such as communication between the CPU and I/O devices.

The supervisor program, also known as the kernel, is responsible for controlling all other programs in the OS, such as compilers, interpreters, assemblers, and utilities for performing special tasks. In addition to single-tasking and multitasking OSs, time-shared OSs allow several users to use computer resources simultaneously. OSs are also available in a variety of platforms for both mainframes and personal computers. Two new operating systems for smartphones and other handheld devices have attracted much attention in recent years: iOS and Android.

B. Application Software

A personal computer can perform a variety of tasks by using **application software**, which can be commercial software or software developed in house. In-house software is usually more expensive than commercial software but is more customized and often fits the users' needs better.

MIS 7th edition Bidgoli Solutions Manual

The following sections gives an overview of common categories of commercial application software for personal computers. In addition to these, many other categories of software are available, such as information management software, Web-authoring software, and photo and graphics software.

Word-Processing Software

One is probably most familiar with word-processing software used to generate documents. Typically, this includes editing features, such as deleting, inserting, and copying text. Advanced word-processing software often includes sophisticated graphics and data management features. Word-processing software saves time, particularly for repetitive tasks, such as sending the same letter to hundreds of customers.

Spreadsheet Software

A spreadsheet is a table of rows and columns, and spreadsheet software is capable of performing numerous tasks with the information in a spreadsheet. One can even prepare a budget and perform a "what-if" analysis on the data. Common spreadsheet software includes Microsoft Excel, IBM's Lotus 1-2-3, and Corel Quattro Pro.

Database Software

Database software is designed to perform operations such as creating, deleting, modifying, searching, sorting, and joining data. A database is essentially a collection of tables consisting of rows and columns. Database software makes accessing and working with data faster and more efficient. For example, manually searching a database containing thousands of records would be almost impossible. With database software, users can search information quickly and even tailor searches to meet specific criteria, such as finding all accounting students younger than 20 who have GPAs higher than 3.6. Popular database software for personal computers includes Microsoft Access, FileMaker Pro, and Alpha Software's Alpha Five. High-end database software used in large enterprises includes Oracle, IBM DB2, and Microsoft SQL Server.

Presentation Software

Presentation software is used to create and deliver slide shows. Microsoft PowerPoint is the most commonly used presentation software. One can include many types of content in slide shows, such as bulleted and numbered lists, charts, and graphs. Individuals can also embed graphics as well as sound and movie clips.

MIS 7th edition Bidgoli Solutions Manual

Presentation software also offers several options for running slide shows, such as altering the time interval between slides. In addition, one can usually convert presentations into other formats, including Web pages and photo albums with music and narration. Another option in some presentation software is capturing what is on the computer screen and then combining several screen captures into a video for demonstrating a process, which can be useful in educational settings or employee training seminars, for example.

Graphics Software

Graphics software is designed to present data in a graphical format, such as line graphs and pie charts. These formats are useful for illustrating trends and patterns in data and for showing correlations. Graphics are created with integrated packages, such as Excel, Lotus 1-2-3, and Quattro Pro, or dedicated graphics packages, such as Adobe Illustrator and IBM Freelance.

Desktop Publishing Software

Desktop publishing software is used to produce professional-quality documents without expensive hardware and software. This software works on a "what-you-see-is-what-you-get" concept, so the high-quality screen display gives one a good idea of what one will see in the printed output. Desktop publishing software is used for creating newsletters, brochures, training manuals, transparencies, posters, and even books. Many desktop publishing packages are available; three popular ones are Adobe InDesign, QuarkXPress, and Microsoft Office Publisher.

Financial Planning and Accounting Software

Financial planning software, which is more powerful than spreadsheet software, is capable of performing many types of analysis on large amounts of data. These analyses include present value, future value, rate of return, cash flow, depreciation, retirement planning, and budgeting. A widely used financial planning package is Intuit Quicken. Using this package, one can plan and analyze all kinds of financial scenarios.

In addition to spreadsheet software, dedicated accounting software is available for performing many sophisticated accounting tasks, such as general ledgers, accounts receivable, accounts payable, payroll, balance sheets, and income statements. Some popular accounting software packages include Intuit QuickBooks, a small-business accounting software, and Sage Software's Peachtree.

MIS 7th edition Bidgoli Solutions Manual

Project Management Software

A project, such as designing a Web site or setting up an order entry system, consists of a set of related tasks. The goal of project management software is to help project managers keep time and budget under control by solving scheduling problems, planning and setting goals, and highlighting potential bottlenecks. One can use such software to study the cost, time, and resource impact of schedule changes. There are several project management software packages on the market, including Microsoft Project and Micro Planning International's Micro Planner.

Computer-Aided Design Software

Computer-aided design (CAD) software is used for drafting and design, and it has replaced traditional tools, such as T-squares, triangles, paper, and pencils. It is used extensively in architecture and engineering firms, but because of major price reductions and increases in PC power, small companies and home users can now afford this software. Widely used CAD software includes Autodesk AutoCAD, Cadkey, and VersaCAD.

In-Class Activity

Divide students into groups. Ask each group to research one category of commercial application software for personal computers. Then ask each group to present its findings to the class, including specific features and examples for each software.

Discussion Question

Discuss the different functions performed by control programs to manage computer hardware and resources.

VIII. Computer Languages

The first generation of computer languages, **machine language**, consists of a series of 0s and 1s representing data or instructions. Machine language depends on the machine, so code written for one type of computer does not work on another type of computer.

Assembly language, the second generation of computer languages, is a higher-level language than machine language but is also machine dependent. It uses a series of short codes, or mnemonics, to represent data or instructions. Writing programs in assembly language is easier

MIS 7th edition Bidgoli Solutions Manual

than in machine language.

Third-generation computer languages are machine independent and are called **high-level languages**. Three of the most widely used languages are C++, Java, and VB.NET. These languages are used mostly for Web development and Internet applications. High-level languages are more like English, so they are easier to learn and code.

Fourth-generation languages (4GLs) are the easiest computer languages to use. The commands are powerful and easy to learn, even for people with little computer training. Sometimes, 4GLs are called nonprocedural languages, which means one does not need to follow a rigorous command syntax to use them. Instead, 4GLs use macrocodes that can take the place of several lines of programming.

Fifth-generation languages (5GLs) use some of the artificial intelligence technologies such as knowledge-based systems, natural language processing (NLP), visual programming, and a graphical approach to programming. Codes are automatically generated and designed to make the computer solve a given problem without a programmer or with minimum programming effort. These languages are designed to facilitate natural conversations between an individual and the computer.

Programming languages used for Internet programming and Web development include ActiveX, C++, Java, JavaScript, Perl, Python, PHP, Visual Basic, and Extensible Stylesheet Language (XSL). The most important Web development languages are Hypertext Markup Language (HTML) and Extensible Markup Language (XML). Both languages are markup languages, not full-featured programming languages.

In-Class Activity

Ask each student to write a small summary on the computer languages that have developed through four generations. Then, ask them to exchange their write-ups and evaluate them. They could then work on the suggested changes.

Discussion Question

Discuss the milestones that have been achieved through each generation of computer languages.

Key Terms

A **computer** is a machine that accepts data as input, processes data without human intervention by using stored instructions, and outputs information. (P.25)

The **central processing unit (CPU)** is the heart of a computer. It is divided into two components: the arithmetic logic unit (ALU) and the control unit. (P.27)

The **arithmetic logic unit (ALU)** performs arithmetic operations (+, –, *, /) as well as comparison or relational operations (<, >, =); the latter are used to compare numbers. (P.27)

The **control unit** tells the computer what to do, such as instructing the computer which device to read or send output to. (P.27)

A **bus** is a link between devices connected to the computer. It can be parallel or serial, internal (local) or external. (P.27)

A **disk drive** is a peripheral device for recording, storing, and retrieving information. (P.27)

A **CPU case** is also known as a computer chassis or tower. It is the enclosure containing the computer's main components. (P.27)

A **motherboard** is the main circuit board containing connectors for attaching additional boards. It usually contains the CPU, Basic Input / Output System (BIOS), memory, storage, interfaces, serial and parallel ports, expansion slots, and all the controllers for standard peripheral devices, such as the display monitor, disk drive, and keyboard. (P.27)

Input devices send data and information to the computer. Examples include a keyboard and mouse. (P.31)

An **output device** is capable of representing information from a computer. The form of this output might be visual, audio, or digital; examples include printers, display monitors, and plotters. (P.32)

Main memory stores data and information and is usually volatile; its contents are lost when electrical power is turned off. It plays a major role in a computer's performance. (P.33)

Secondary memory, which is nonvolatile, holds data when the computer is off or during the course of a program's operation. It also serves as archival storage. (P.33)

Random access memory (RAM) is volatile memory, in which data can be read from and

written to; it is also called read-write memory. (P.33)

Cache RAM resides on the processor. Because memory access from main RAM storage takes several clock cycles (a few nanoseconds), cache RAM stores recently accessed memory so the processor is not waiting for the memory transfer. (P.33)

Read-only memory (ROM) is nonvolatile; data cannot be written to ROM. (P.33)

A **magnetic disk**, made of Mylar or metal, is used for random-access processing. In other words, data can be accessed in any order, regardless of its order on the surface. (P.33)

Magnetic tape, made of a plastic material, resembles a cassette tape and stores data sequentially. (P.33)

Optical discs use laser beams to access and store data. Examples include CD-ROMs, WORM discs, and DVDs. (P.34)

A **redundant array of independent disks (RAID)** system is a collection of disk drives used for fault tolerance and improved performance, and is typically found in large network systems. (P.34)

Used for online storage and backup, **cloud storage** involves multiple virtual servers that are usually hosted by third parties. Customers buy or lease storage space from third parties based on their current or future needs. (P.34)

A **storage area network (SAN)** is a dedicated high-speed network consisting of both hardware and software used to connect and manage shared storage devices, such as disk arrays, tape libraries, and optical storage devices. (P.35)

Network-attached storage (NAS) is essentially a network-connected computer dedicated to providing file-based data storage services to other network devices. (P.35)

A **server** is a computer and all the software for managing network resources and offering services to a network. (P.38)

An **operating system (OS)** is a set of programs for controlling and managing computer hardware and software. It provides an interface between a computer and the user and increases computer efficiency by helping users share computer resources and by performing repetitive tasks for users. (P.38)

Application software can be commercial software or software developed in house and is used to perform a variety of tasks on a personal computer. (P.39)

Machine language, the first generation of computer languages, consists of a series of *0*s and *1*s representing data or instructions. It is dependent on the machine, so code written for one type of computer does not work on another type of computer. (P.42)

Assembly language, the second generation of computer languages, is a higher-level language than machine language but is also machine dependent. It uses a series of short codes, or mnemonics, to represent data or instructions. (P.42)

High-level languages are machine independent and part of the third generation of computer languages. Many languages are available, and each is designed for a specific purpose. (P.42)

Fourth-generation languages (4GLs) use macro codes that can take the place of several lines of programming. The commands are powerful and easy to learn, even for people with little computer training. (P.42)

Fifth-generation languages (5GLs) use some of the artificial intelligence technologies, such as knowledge-based systems, natural language processing (NLP), visual programming, and a graphical approach to programming. These languages are designed to facilitate natural conversations between you and the computer. (P.42)

Reviews and Discussions

These are the new 8:

1. Define a computer.

2. What are two applications of IBM Watson?

3. Computers draw their power from three factors? What are these three factors?

4. What are two advantages of solid state drives?

5. What are two OSs for smartphones?

6. What are two classes of software for PCs?

7. What are five generation of computer software?

8. What are three business applications of an iPad?

Projects

1. A local law firm needs your advice. It currently has 20 PCs being used by its attorneys and staff, and it is debating whether to use Google Apps or Office 365 as its productivity tools. Write a two-page paper that summarizes your recommendation. What are two advantages and two disadvantages of each choice? Which alternative is less expensive? What are two advantages of Office 365 over traditional Office?

   Students' answers will vary.

2. After reading the information presented in this chapter and other sources, write a one-page paper that describes two advantages and two disadvantages of SAN and NAS. Name two vendors of each technology. Which one is less expensive? Which one do you recommend for Project #1 above?

   Students' answers will vary.

3. A classmate of yours is not sure whether to buy a PC or a tablet. He needs the device for schoolwork (mostly Microsoft Office), for Web access, and as an e-reader. After reading the information presented in this chapter and other sources, write a one-page paper that summarizes your recommendation to this fellow student. Also mention two choices that you consider as top of the line for each alternative.

   Students' answers will vary.

4. IBM Watson has created a lot of excitement in the computing field. After reading the information presented in this chapter and other sources, write a one-page paper that summarizes three commercial applications of this platform. What are two advantages of using Watson compared to using humans in the medical field? What are two disadvantages? How can Watson be used as a trip-planning service?

   Students' answers will vary.

5. Android and iOS are two major operating systems for smartphones and other mobile devices. After reading the information presented in this chapter and other sources, write a two-page paper that summarizes the key features of each OS. What are two advantages and two disadvantages of each? Which OS has a bigger market share and why?

   Students' answers will vary.

6. Dragon NaturallySpeaking Solutions is an example of an NLP. After reading the information presented in this chapter and other sources, write a two-page paper that describes five commercial applications for this platform. Which businesses will benefit the most from this platform? What are two other products that compete with this software?

   Students' answers will vary.

Are You Ready to Move On?

1. The central processing unit (CPU) is the heart of a computer. It is divided into two components: the arithmetic logic unit (ALU) and the control unit. True or False?

2. ROM is volatile. True or False?

3. Network-attached storage (NAS) is essentially a network-connected computer dedicated to providing file-based data storage services to other network devices. True or False?

4. Choose the incorrect answer.

a. First generation- Vacuum tube
b. Second generation- Transistors
c. Third generation- Parallel processing

d. Fourth generation- Miniaturization

5. Which one is not an application software?

a. MS Word
b. Apple iOS
c. MS Excel
d. Adobe InDesign

6. All of the following are among the current trends in I/O devices except:

a. Widespread applications of mainframe computers
b. Thinner and lighter laptops and tablets
c. Faster and larger memory
d. Widespread applications of wireless devices

Case Studies

Case Study 2-1: Become Your Own Banker

1. Using your smartphone and a financial app, how do you deposit a check into your checking account?

   To deposit a check into one's banking account using a financial app, one can simply take a photograph of the front and back of the check. Once this is done, the app will ask for the amount one wants to deposit. Then one should type the account number and then press "OK" to complete the deposit.

2. Name some financial apps introduced in this case.

   Mint app (mint.com) from Intuit, HelloWallet from HelloWallet.com, and QuickShot are some financial apps introduced in this case.

3. What are some examples of analytics that can be done using financial apps?

   Students' answers will vary. For example, one can establish a budget and keep track of the expenses in various categories, such as food, gas, and groceries.

4. What are some other examples of financial apps? What are their applications?

   Students' answers will vary. MoneyWiz (SilverWiz), iBank (IGG Software), and Money (Jumsoft) are three examples of financial apps.

Case Study 2-2: iPads: New Productivity Tools for Service Workers

1. According to this case study, how were outages reported to the utilities department manager in the past?

   In the past when there was an outage related to power, water, or steam (used for heating), the utility manager was contacted by phone to look into the problem and come up with a course of action to fix the problem. This usually caused some delays, as a manager might be off campus or busy with other things.

2. What are the two apps that are being used by the utilities department?

   The equipment used by Cornell University's utilities department comes from GE and has an iOS app for drilling down into the utility management system and analyzing the available data. The utility personnel have access to a Web app for those analyses that are not suitable for the iOS app. The Web app allows personnel to control the equipment and see more detailed information, such as the percentage of valves that are open. The utility personnel can use the Web app to remotely control the utility management system from their browsers.

3. What are two advantages of using iPad at the utilities department?

   Students' answers may vary. However, some of them may mention how iPads were used to diagnose a problem and in some cases even fix the problem at Cornell University's utilities department. The equipment used by Cornell University's utilities department comes from GE and has an iOS app for drilling down into the utility management system and analyzing the available data. According to the university, the iPad provides easy access to key information anywhere and at any time.

BIDGOLI

MIS 7

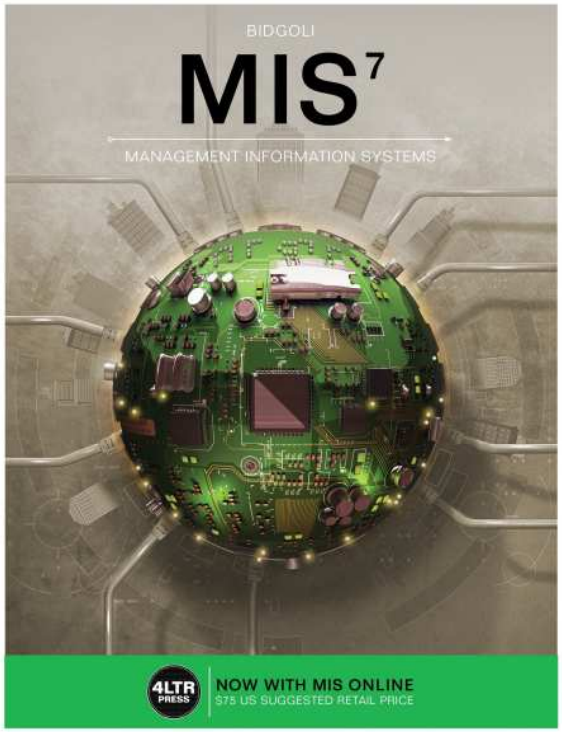

2

COMPUTERS: THE MACHINES BEHIND COMPUTING

Copyright ©2016 Cengage Learning. All Rights Reserved. May not be scanned, copied or duplicated, or posted to a publicly accessible website, in whole or in part.

MIS 7th edition Bidgoli Solutions Manual

LEARNING OUTCOMES

1. Define a computer system, and describe its components
2. Discuss the history of computer hardware and software
3. Explain the factors distinguishing the computing power of computers
4. Summarize computer operations

Copyright ©2016 Cengage Learning. All Rights Reserved. May not be scanned, copied or duplicated, or posted to a publicly accessible website, in whole or in part.

MIS 7th edition Bidgoli Solutions Manual

LEARNING OUTCOMES *(continued)*

5 Discuss the types of input, output, and memory devices

6 Explain how computers are classified

7 Describe the two major types of software

8 List the generations of computer languages

Copyright ©2016 Cengage Learning. All Rights Reserved. May not be scanned, copied or duplicated, or posted to a publicly accessible website, in whole or in part.

MIS 7th edition Bidgoli Solutions Manual

Defining a Computer

- Machine that:
  - *Accepts data as input*
  - *Processes data without human intervention using stored instructions*
  - *Outputs information*
- Program
  - *Step-by-step directions for performing a specific task*
  - *Written in a language the computer can understand*

Copyright ©2016 Cengage Learning. All Rights Reserved. May not be scanned, copied or duplicated, or posted to a publicly accessible website, in whole or in part.

MIS 7th edition Bidgoli Solutions Manual

Defining a Computer

- GIGO
  - *Rule stating that, if data is erroneous, the information provided by the computer is also erroneous*
  - *Referred as garbage in, garbage out*

Copyright ©2016 Cengage Learning. All Rights Reserved. May not be scanned, copied or duplicated, or posted to a publicly accessible website, in whole or in part.

MIS 7th edition Bidgoli Solutions Manual

Defining a Computer

- Writing a computer program requires:
  - *Identifying the objective and method of achieving the objective*
  - *Selecting the right language*
    - Depends on the problem being solved and the type of computer being used
- A program is also called a source code
  - *Source code must be translated into object code consisting of binary 0s and 1s*

Copyright ©2016 Cengage Learning. All Rights Reserved. May not be scanned, copied or duplicated, or posted to a publicly accessible website, in whole or in part.

MIS 7th edition Bidgoli Solutions Manual

Components of a Computer System

- Hardware components
  - *Physical devices: Keyboards, monitors, and processing units*
- Software components
  - *Programs written in computer languages*

Copyright ©2016 Cengage Learning. All Rights Reserved. May not be scanned, copied or duplicated, or posted to a publicly accessible website, in whole or in part.

MIS 7th edition Bidgoli Solutions Manual

Components of a Computer System

- **Central processing unit** (**CPU**): Heart of a computer, consisting of:
  - ***Arithmetic logic unit*** *(**ALU**): Performs arithmetic operations (+, –, *, /) and comparison or relational operations (<, >, =)*
  - ***Control unit****: Instructs the computer which device to read or send output to*
- Computers can either have a single processor or multiprocessors
  - *Multiprocessing: Use of two or more CPUs in a single computer system*

Copyright ©2016 Cengage Learning. All Rights Reserved. May not be scanned, copied or duplicated, or posted to a publicly accessible website, in whole or in part.

MIS 7th edition Bidgoli Solutions Manual

Exhibit 2.1 The Building Blocks of a Computer

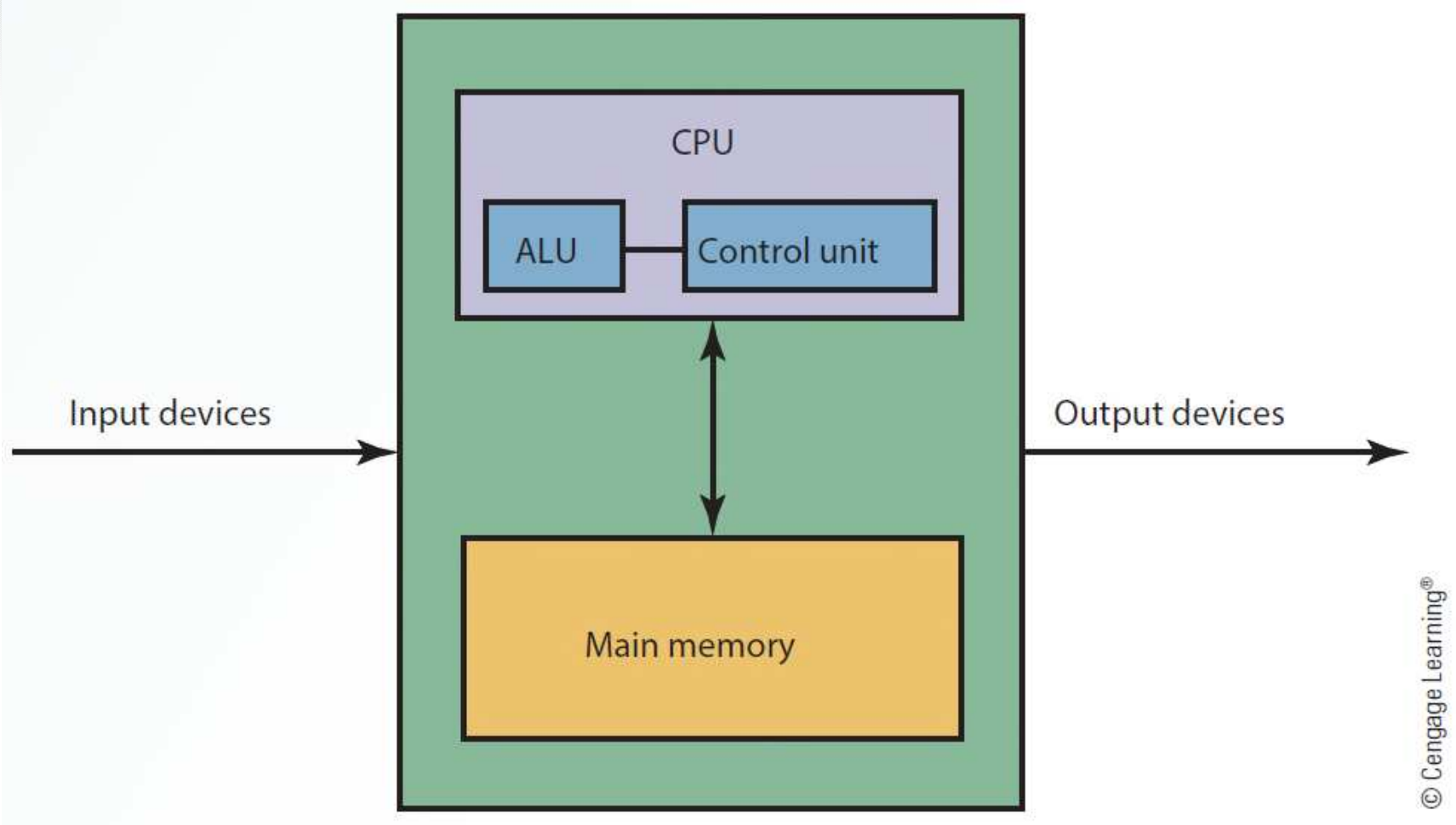

Copyright ©2016 Cengage Learning. All Rights Reserved. May not be scanned, copied or duplicated, or posted to a publicly accessible website, in whole or in part.

MIS 7th edition Bidgoli Solutions Manual

Components of a Computer System

- **Bus**: Link between devices connected to the computer
  - *Exists as parallel or serial, internal (local) or external*
- **Disk drive**: Peripheral device for recording, storing, and retrieving information

Copyright ©2016 Cengage Learning. All Rights Reserved. May not be scanned, copied or duplicated, or posted to a publicly accessible website, in whole or in part.

MIS 7th edition Bidgoli Solutions Manual

Components of a Computer System

- **CPU case**: Enclosure containing the computer's main components
  - *Referred to as computer chassis or tower*
- **Motherboard**: Circuit board containing connectors for attaching additional boards

Copyright ©2016 Cengage Learning. All Rights Reserved. May not be scanned, copied or duplicated, or posted to a publicly accessible website, in whole or in part.

MIS 7th edition Bidgoli Solutions Manual

Exhibit 2.2 Components of a Computer System

© Avera/Shutterstock.com

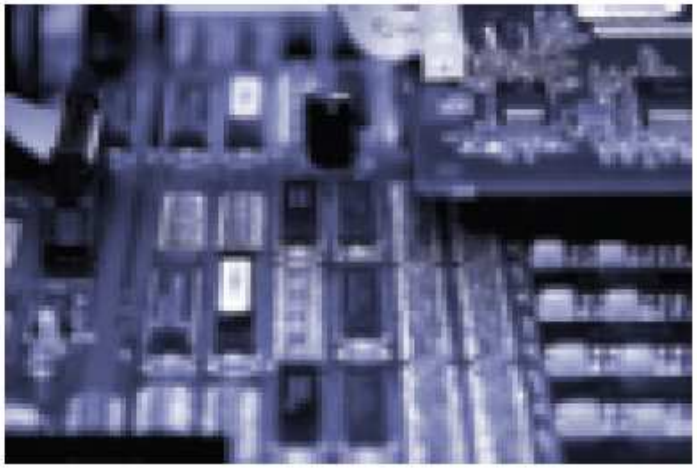

© Henrik Lehnerer/ Shutterstock.com

© Ps-42/Shutterstock.com

Copyright ©2016 Cengage Learning. All Rights Reserved. May not be scanned, copied or duplicated, or posted to a publicly accessible website, in whole or in part.

History of Computer Hardware and Software

- First-generation computers used vacuum tube technology in the 1940s
  - *Size was bulky and unreliable*
  - *Generated excessive heat*
  - *Programming was difficult*
- Second-generation computers used transistors
  - *Speed was faster, and more reliable*
  - *Easier to program and maintain*

Copyright ©2016 Cengage Learning. All Rights Reserved. May not be scanned, copied or duplicated, or posted to a publicly accessible website, in whole or in part.

MIS 7th edition Bidgoli Solutions Manual

Table 2.1 Hardware Generations

Generation	Date	Major technologies	Example
First	1946–1956	Vacuum tube	ENIAC
Second	1957–1963	Transistors	IBM 7094, 1401
Third	1964–1970	Integrated circuits, remote data entry, telecommunications	IBM 360, 370
Fourth	1971–1992	Miniaturization, VLSI, personal computers, optical discs	Cray XMP, Cray II
Fifth	1993–present	Parallel processing, gallium arsenide chips, optical technologies	IBM System zEnterprise EC12

© Cengage Learning®

Copyright ©2016 Cengage Learning. All Rights Reserved. May not be scanned, copied or duplicated, or posted to a publicly accessible website, in whole or in part.

MIS 7th edition Bidgoli Solutions Manual

Factors Affecting the Power of Computers

Speed

Accuracy

Storage and retrieval capabilities

Copyright ©2016 Cengage Learning. All Rights Reserved. May not be scanned, copied or duplicated, or posted to a publicly accessible website, in whole or in part.

MIS 7th edition Bidgoli Solutions Manual

Speed and Accuracy

- Computer speed is measured as the number of instructions performed per fractions of a second
  - *Millisecond: 1/1000 of a second*
  - *Microsecond: 1/1,000,000 of a second*
  - *Nanosecond: 1/1,000,000,000 of a second*
  - *Picosecond: 1/1,000,000,000,000 of a second*
- Degree of accuracy is extremely important for many computer applications

Copyright ©2016 Cengage Learning. All Rights Reserved. May not be scanned, copied or duplicated, or posted to a publicly accessible website, in whole or in part.

MIS 7th edition Bidgoli Solutions Manual

Storage and Retrieval

- Storage: Saving data in computer memory
- Retrieval: Accessing data from memory
- Data is stored in bits
- American Standard Code for Information Interchange (ASCII)
  - *Data code for text files, PC applications, and the Internet*
  - *Defines up to 128 characters*

Copyright ©2016 Cengage Learning. All Rights Reserved. May not be scanned, copied or duplicated, or posted to a publicly accessible website, in whole or in part.

MIS 7th edition Bidgoli Solutions Manual

Table 2.3 Storage Measurements (Approximations)

1 bit	A single value of 0 or 1
8 bits	1 byte or character
2^{10} bytes	1000 bytes, or 1 kilobyte (KB)
2^{20} bytes	1,000,000 bytes, or 1 megabyte (MB)
2^{30} bytes	1,000,000,000 bytes, or 1 gigabyte (GB)
2^{40} bytes	1,000,000,000,000 bytes, or 1 terabyte (TB)
2^{50} bytes	1,000,000,000,000,000 bytes, or 1 petabyte (PB)
2^{60} bytes	1,000,000,000,000,000,000 bytes, or 1 exabyte (EB)

© Cengage Learning®

Copyright ©2016 Cengage Learning. All Rights Reserved. May not be scanned, copied or duplicated, or posted to a publicly accessible website, in whole or in part.

MIS 7th edition Bidgoli Solutions Manual

Input Devices

- Send data and information to the computer
  - *Keyboard, mouse, touch screen, light pen, trackball, and data tablet*
  - *Barcode reader, optical character reader (OCR), magnetic ink character recognition (MICR) system, and optical mark recognition (OMR) system*

Copyright ©2016 Cengage Learning. All Rights Reserved. May not be scanned, copied or duplicated, or posted to a publicly accessible website, in whole or in part.

MIS 7th edition Bidgoli Solutions Manual

Output Devices

- Capable of representing information from a computer
  - *Form of this output might be visual, audio, or digital*
- Displays output in the forms of soft copy and hard copy
- Plotters: Converts output to graphics
- Voice synthesizers: Converts output to voice

Copyright ©2016 Cengage Learning. All Rights Reserved. May not be scanned, copied or duplicated, or posted to a publicly accessible website, in whole or in part.

MIS 7th edition Bidgoli Solutions Manual

Memory Devices

- **Main memory**: Stores data and is volatile
  - *Volatile: Contents are lost when electrical power is turned off*
- **Secondary memory**
  - *Nonvolatile*
  - *Holds data when the computer is off or during course of a program's operation*
  - *Serves as archival storage*

Copyright ©2016 Cengage Learning. All Rights Reserved. May not be scanned, copied or duplicated, or posted to a publicly accessible website, in whole or in part.

MIS 7th edition Bidgoli Solutions Manual

Main Memory Devices

- Semiconductor chips made of silicon
  - *Can be volatile or nonvolatile*
- **Random access memory (RAM)**: Is a volatile memory, in which data can be read from and written to
  - *Known as read-write memory*
  - ***Cache RAM**: Stores recently accessed memory*
    - Resides on the processor as memory access from main RAM storage takes several clock cycles

Copyright ©2016 Cengage Learning. All Rights Reserved. May not be scanned, copied or duplicated, or posted to a publicly accessible website, in whole or in part.

MIS 7th edition Bidgoli Solutions Manual

Main Memory Devices

- **Read only memory (ROM)**: Is nonvolatile
  - *Data cannot be written to it*
  - *Includes BIOS information and the computer system's clock*
  - *Types*
    - Programmable read-only memory (PROM)
    - Erasable programmable read-only memory (EPROM)

Copyright ©2016 Cengage Learning. All Rights Reserved. May not be scanned, copied or duplicated, or posted to a publicly accessible website, in whole or in part.

MIS 7th edition Bidgoli Solutions Manual

Secondary Memory Devices

Magnetic disks

- Made of mylar or metal
- Used for random-access processing

Magnetic tape

- Made of a plastic material
- Stores data sequentially

Optical discs

- Use laser beams to access and store data
- CD-ROM, WORM, DVD

Copyright ©2016 Cengage Learning. All Rights Reserved. May not be scanned, copied or duplicated, or posted to a publicly accessible website, in whole or in part.

MIS 7th edition Bidgoli Solutions Manual

Secondary Memory Devices

- Includes hard disk, USB flash drive, memory card
- **Redundant array of independent disks (RAID) system**
  - *Collection of disk drives used for fault tolerance and improved performance*
  - *Found in large network systems*

Copyright ©2016 Cengage Learning. All Rights Reserved. May not be scanned, copied or duplicated, or posted to a publicly accessible website, in whole or in part.

MIS 7th edition Bidgoli Solutions Manual

Secondary Memory Devices

- **Cloud storage**
  - *Used for online storage and backup*
  - *Involves multiple virtual servers that are hosted by third parties*
  - *Customers buy or lease storage space from third parties based on their current or future needs*

Copyright ©2016 Cengage Learning. All Rights Reserved. May not be scanned, copied or duplicated, or posted to a publicly accessible website, in whole or in part.

MIS 7th edition Bidgoli Solutions Manual

Table 2.4 Capacity of Secondary Memory Devices

Device	Storage capacity
Memory stick	16 GB
Hard disk	2 TB
CD-ROM, CD-R, CD-RW	800 MB
DVD-ROM, DVD-R, DVD-RW	4.7 GB or more
Blu-Ray (latest generation optical disc)	Up to 25 GB on a single-layer disc and 50 GB on a dual-layer disc

© Cengage Learning®

Copyright ©2016 Cengage Learning. All Rights Reserved. May not be scanned, copied or duplicated, or posted to a publicly accessible website, in whole or in part.

MIS 7th edition Bidgoli Solutions Manual

Storage Area Networks and Network-Attached Storage

- **Storage area network (SAN)**
  - *Dedicated high-speed network consisting of both hardware and software*
  - *Used to connect and manage shared storage devices*
    - Disk arrays, tape libraries, and optical storage devices
- **Network-attached storage (NAS)**
  - *Network-connected computer dedicated to provide file-based data storage services to other network devices*

Copyright ©2016 Cengage Learning. All Rights Reserved. May not be scanned, copied or duplicated, or posted to a publicly accessible website, in whole or in part.

MIS 7th edition Bidgoli Solutions Manual

Classes of Computers

- Vary in terms of cost, amount of memory, speed, and sophistication
- Types
  - *Subnotebooks and notebooks*
  - *Personal and minicomputers*
  - *Mainframes*
  - *Supercomputers*

Copyright ©2016 Cengage Learning. All Rights Reserved. May not be scanned, copied or duplicated, or posted to a publicly accessible website, in whole or in part.

MIS 7th edition Bidgoli Solutions Manual

Server Platforms: An Overview

- **Server**
  - *Computer and all the software for managing network resources and offering services to a network*
- Available server platforms
  - *Application, database, disk, fax, file, mail, print, remote access servers (RAS), and Web servers*

Copyright ©2016 Cengage Learning. All Rights Reserved. May not be scanned, copied or duplicated, or posted to a publicly accessible website, in whole or in part.

MIS 7th edition Bidgoli Solutions Manual

What is Software?

- Programs that run a computer system
- Classification
  - *System software: Works in the background and takes care of tasks such as deleting waste files*
  - *Application software: Performs specialized tasks*

Copyright ©2016 Cengage Learning. All Rights Reserved. May not be scanned, copied or duplicated, or posted to a publicly accessible website, in whole or in part.

MIS 7th edition Bidgoli Solutions Manual

Operating System

- Set of programs for controlling and managing computer hardware and software
- Provides an interface between a computer and the user
- Increases computer efficiency by helping users share computer resources and performing repetitive tasks for users

Copyright ©2016 Cengage Learning. All Rights Reserved. May not be scanned, copied or duplicated, or posted to a publicly accessible website, in whole or in part.

MIS 7th edition Bidgoli Solutions Manual

Operating System Software

- Consists of control programs to manage hardware and resources by performing:
  - *Job management*
  - *Resource allocation*
  - *Data management*
  - *Communication*
- Supervisor program: Responsible for controlling all other programs in the OS
  - *Known as the kernel*

Copyright ©2016 Cengage Learning. All Rights Reserved. May not be scanned, copied or duplicated, or posted to a publicly accessible website, in whole or in part.

MIS 7th edition Bidgoli Solutions Manual

Application Software

- Commercial software or software developed in-house, used to perform variety of tasks on a personal computer
  - *Word processing*
  - *Spreadsheet and database*
  - *Presentation and graphics*
  - *Desktop publishing*
  - *Financial planning and accounting*
  - *Project management*
  - *Computer-aided design (CAD)*

Copyright ©2016 Cengage Learning. All Rights Reserved. May not be scanned, copied or duplicated, or posted to a publicly accessible website, in whole or in part.

MIS 7th edition Bidgoli Solutions Manual

Computer Languages

- **Machine language**
  - *First generation of computer languages*
  - *Consists of a series of 0 s and 1 s representing data or instructions representing data or instructions*
  - *Dependent on the machine*
  - *Time consuming to write a program*

Copyright ©2016 Cengage Learning. All Rights Reserved. May not be scanned, copied or duplicated, or posted to a publicly accessible website, in whole or in part.

MIS 7th edition Bidgoli Solutions Manual

Computer Languages

- **Assembly language**
  - *Second generation of computer languages*
  - *Machine dependent, though a higher-level language than machine language*
  - *Uses a series of short codes, or mnemonics, to represent data or instructions*

Copyright ©2016 Cengage Learning. All Rights Reserved. May not be scanned, copied or duplicated, or posted to a publicly accessible website, in whole or in part.

MIS 7th edition Bidgoli Solutions Manual

Computer Languages

- **High-level languages**
  - *Part of the third-generation of computer languages*
  - *Machine independent and self documenting*
  - *Used for Web development and Internet applications*
- **Fourth generation languages (4GLs)**
  - *Use macro codes that can take the place of several lines of programming*
  - *Commands are powerful and easy to learn*

Copyright ©2016 Cengage Learning. All Rights Reserved. May not be scanned, copied or duplicated, or posted to a publicly accessible website, in whole or in part.

MIS 7th edition Bidgoli Solutions Manual

Computer Languages

- **Fifth-generation languages (5GLs)**
  - *Use artificial intelligence technologies*
    - Knowledge-based systems, natural language processing (NLP), visual programming, and a graphical approach to programming
  - *Designed to facilitate natural conversations between an individual and the computer*

Copyright ©2016 Cengage Learning. All Rights Reserved. May not be scanned, copied or duplicated, or posted to a publicly accessible website, in whole or in part.

MIS 7th edition Bidgoli Solutions Manual

KEY TERMS

- Application software
- Arithmetic logic unit (ALU)
- Assembly language
- Bus
- Cache RAM
- Central processing unit (CPU)
- Cloud storage
- Computer

Copyright ©2016 Cengage Learning. All Rights Reserved. May not be scanned, copied or duplicated, or posted to a publicly accessible website, in whole or in part.

MIS 7th edition Bidgoli Solutions Manual

KEY TERMS

- Control unit
- CPU case
- Disk drive
- Fifth-generation languages (5GLs)
- Fourth-generation languages (4gGLs)
- High-level languages
- Input devices
- Machine language

Copyright ©2016 Cengage Learning. All Rights Reserved. May not be scanned, copied or duplicated, or posted to a publicly accessible website, in whole or in part.

MIS 7th edition Bidgoli Solutions Manual

KEY TERMS

- **Magnetic disk**
- **Magnetic tape**
- **Main memory**
- **Motherboard**
- **Network attached storage (NAS)**
- **Operating system (OS)**
- **Optical discs**

Copyright ©2016 Cengage Learning. All Rights Reserved. May not be scanned, copied or duplicated, or posted to a publicly accessible website, in whole or in part.

MIS 7th edition Bidgoli Solutions Manual

KEY TERMS

- **Output devices**
- **Random access memory (RAM)**
- **Read-only memory (ROM)**
- **Redundant array of independent disks (RAID)**
- **Secondary memory**
- **Server**
- **Storage area network (SAN)**

Copyright ©2016 Cengage Learning. All Rights Reserved. May not be scanned, copied or duplicated, or posted to a publicly accessible website, in whole or in part.

MIS 7th edition Bidgoli Solutions Manual

SUMMARY

- Computers perform arithmetic, logical, and storage and retrieval operations
- To process data a computer requires input, output, and memory devices
- Software is all the programs that run a computer system
- Computer languages include machine, assembly, high-level, fourth- and fifth-generation languages

Copyright ©2016 Cengage Learning. All Rights Reserved. May not be scanned, copied or duplicated, or posted to a publicly accessible website, in whole or in part.

MIS 7th edition Bidgoli Solutions Manual

Copyright ©2016 Cengage Learning. All Rights Reserved. May not be scanned, copied or duplicated, or posted to a publicly accessible website, in whole or in part.

MIS 7th edition Bidgoli Solutions Manual