Introduction to SolidWorks A Comprehensive Guide with Applications in 3D Printing 1st edition Onwubolu Solutions Manual

SKU: 9781498731195-SOLUTIONS

Introduction to SolidWorks A Comprehensive Guide with Applications in 3D Printing 1st edition Onwubolu Solutions Manual

Chapter 2: Geometric Construction Tools

1. Problem 2-1

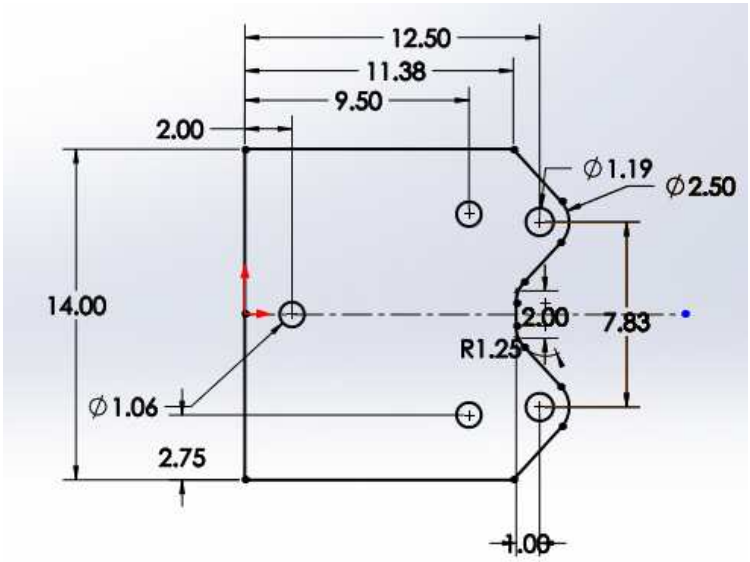

Step 1

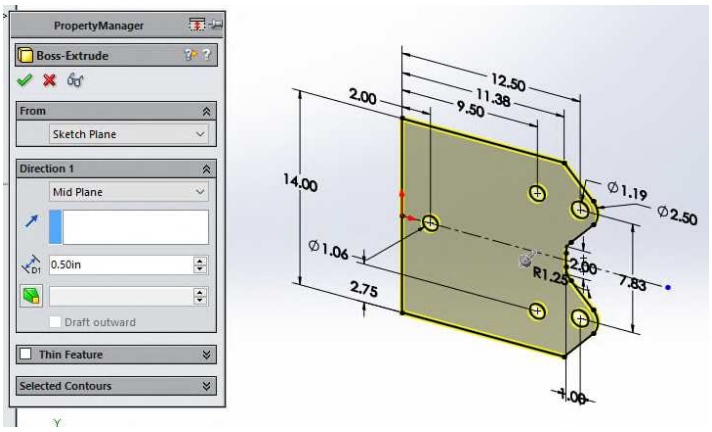

Step 2

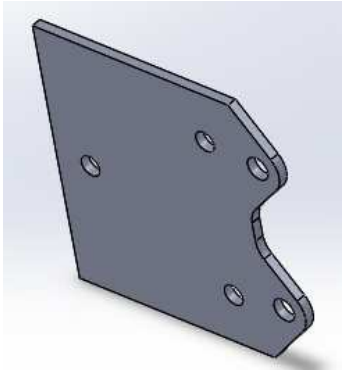

Step 3

Introduction to SolidWorks A Comprehensive Guide with Applications in 3D Printing 1st edition Onwubolu Solutions Manual

2. Problem 2-2

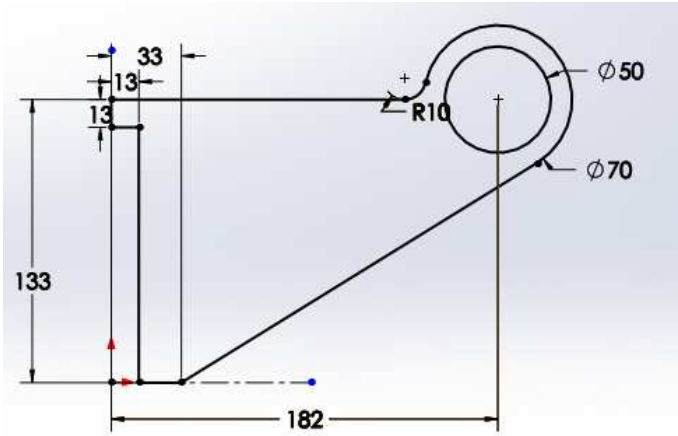

Step 1

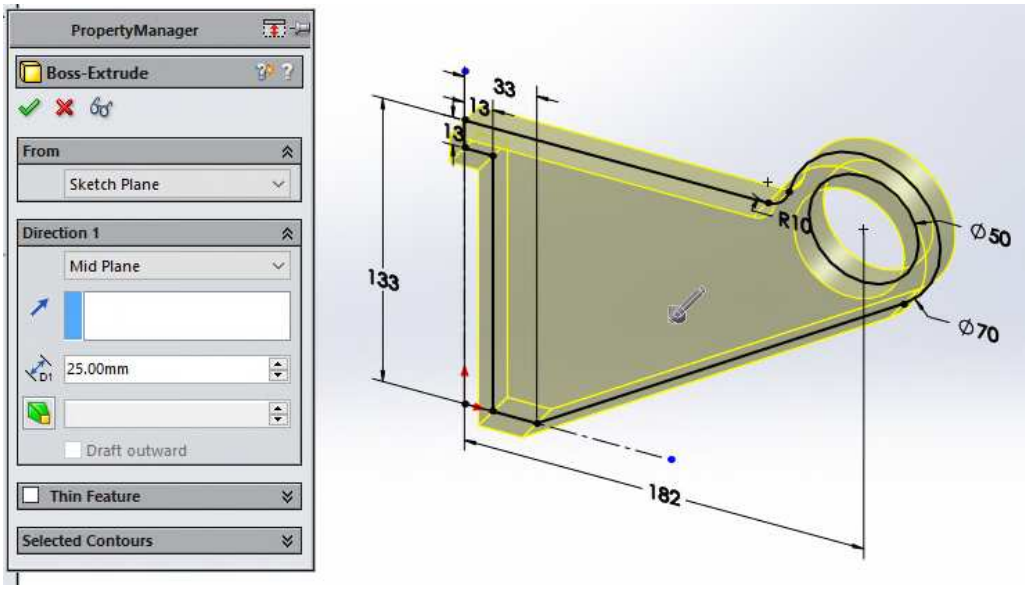

Step 2

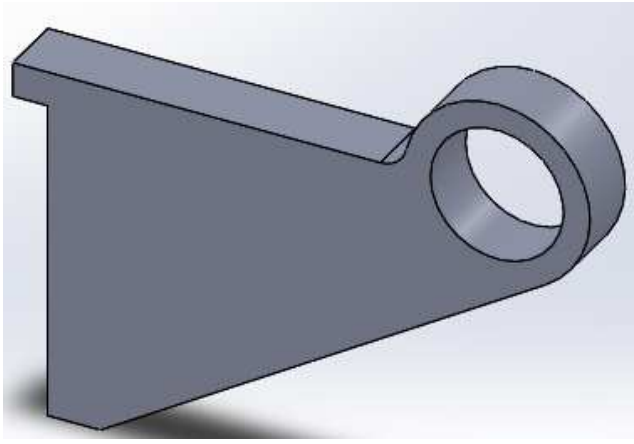

Step 3

Introduction to SolidWorks A Comprehensive Guide with Applications in 3D Printing 1st edition Onwubolu Solutions Manual

3. Problem 2-3

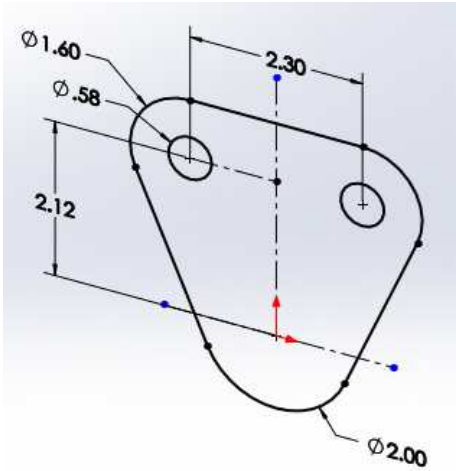

Step 1

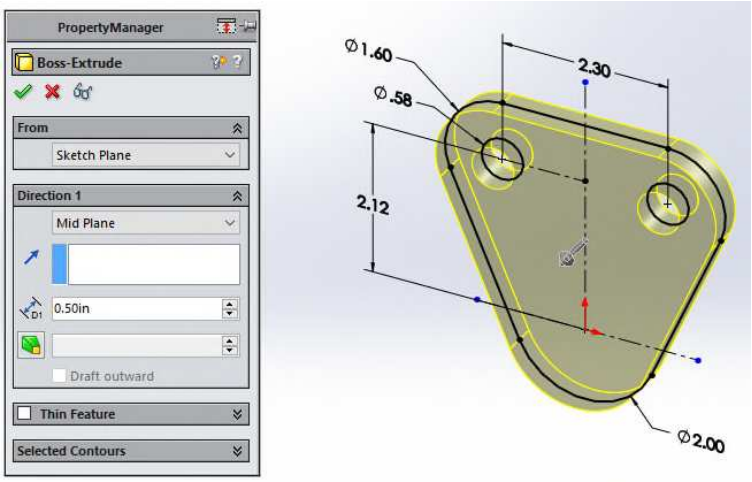

Step 2

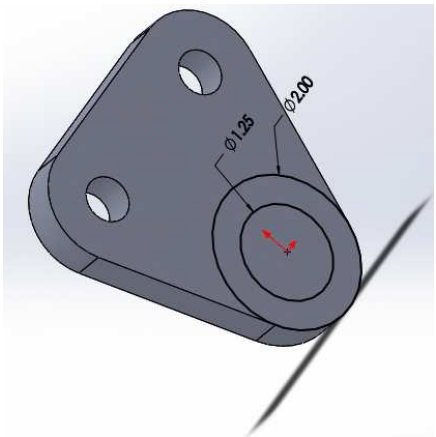

Step 3

Introduction to SolidWorks A Comprehensive Guide with Applications in 3D Printing 1st edition Onwubolu Solutions Manual

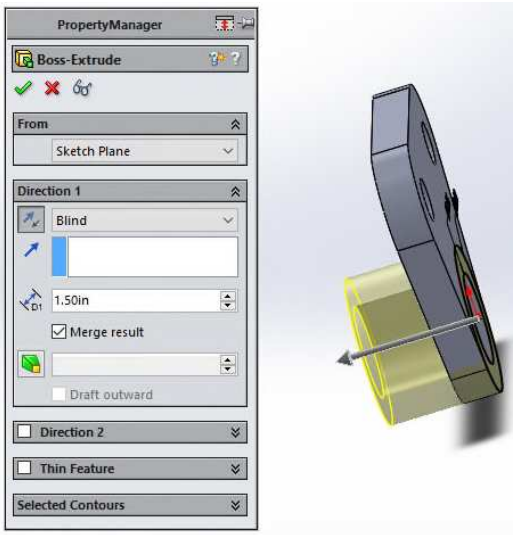

Step 4

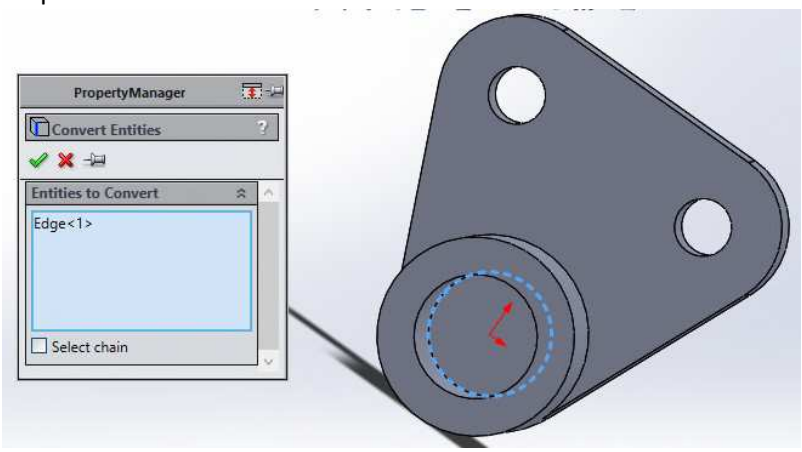

Step 5

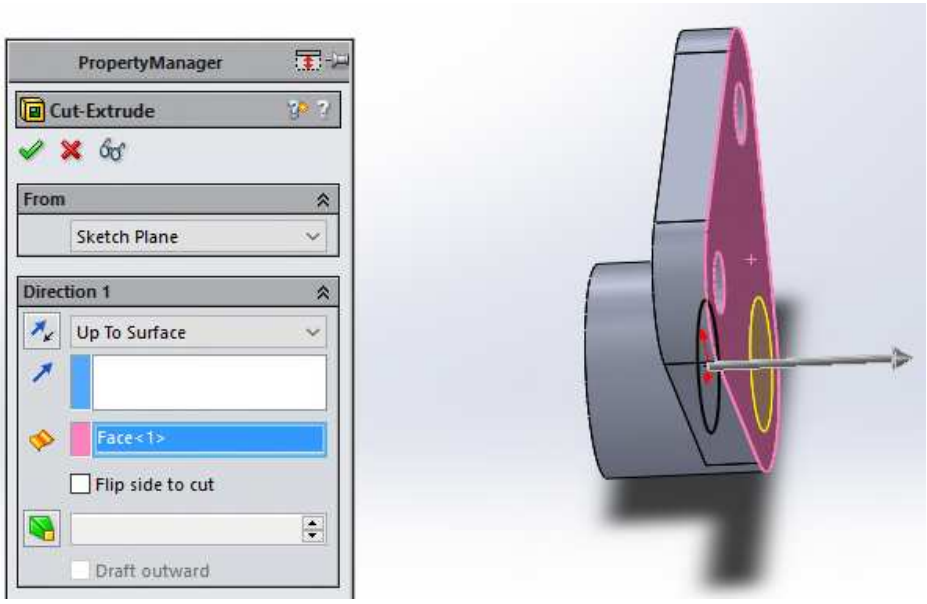

Step 6

Introduction to SolidWorks A Comprehensive Guide with Applications in 3D Printing 1st edition Onwubolu Solutions Manual

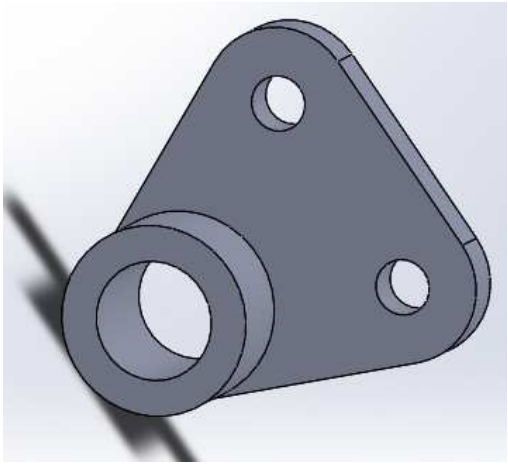

Step 7

Introduction to SolidWorks A Comprehensive Guide with Applications in 3D Printing 1st edition Onwubolu Solutions Manual

4. Problem 2-4

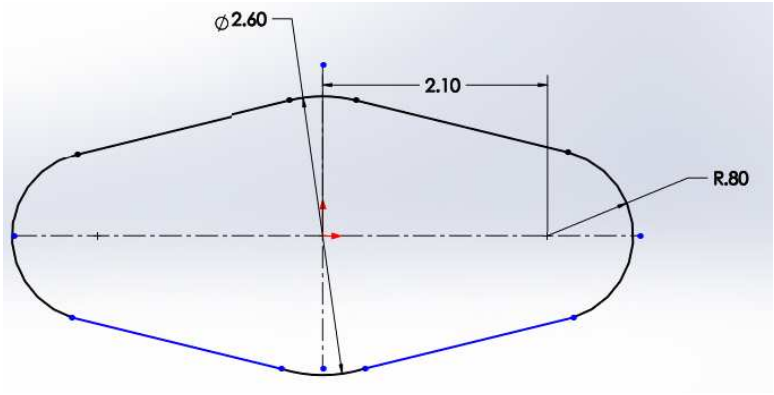

Step 1

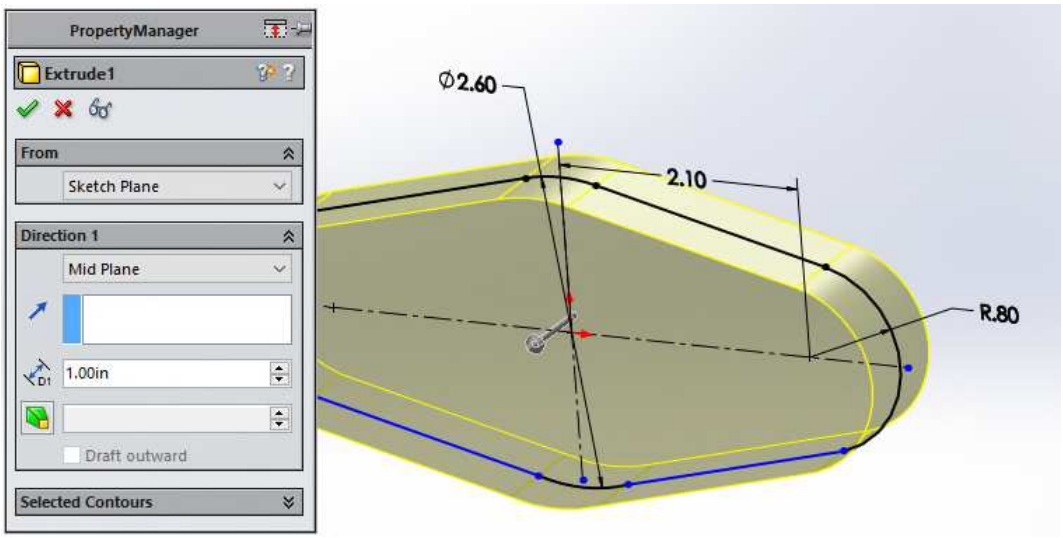

Step 2

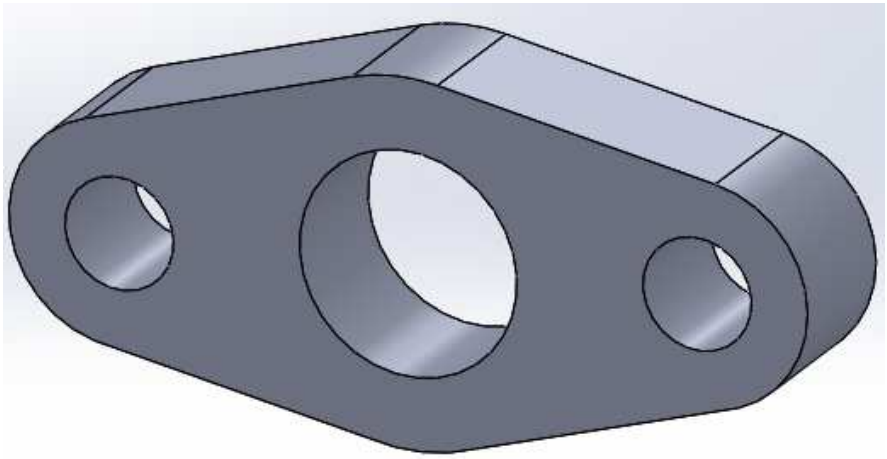

Step 3

Introduction to SolidWorks A Comprehensive Guide with Applications in 3D Printing 1st edition Onwubolu Solutions Manual

5. Problem 2-5

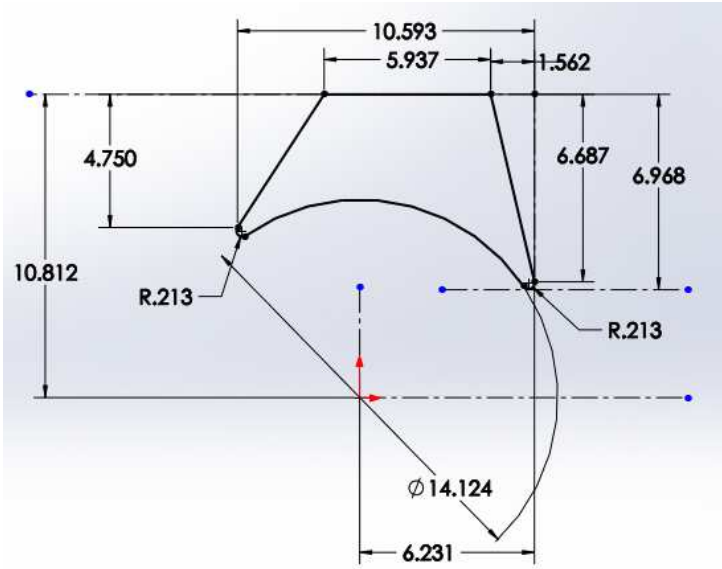

Step 1

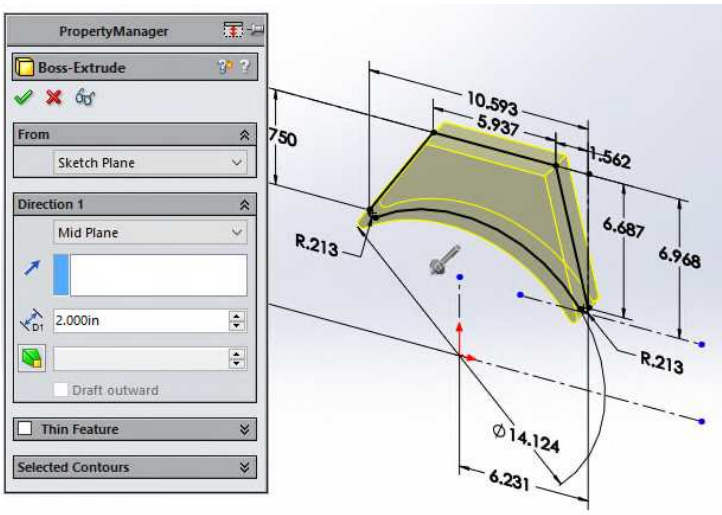

Step 2

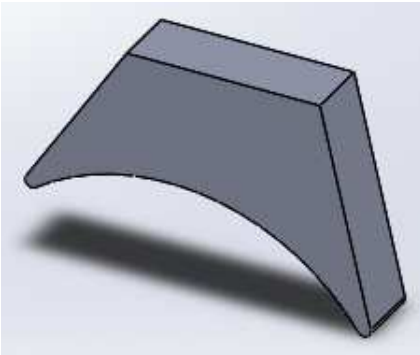

Step 3

Introduction to SolidWorks A Comprehensive Guide with Applications in 3D Printing 1st edition Onwubolu Solutions Manual

6. Problem 2-6

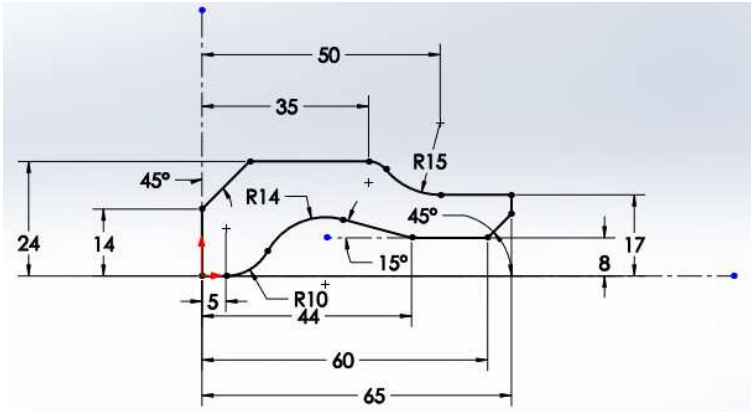

Step 1

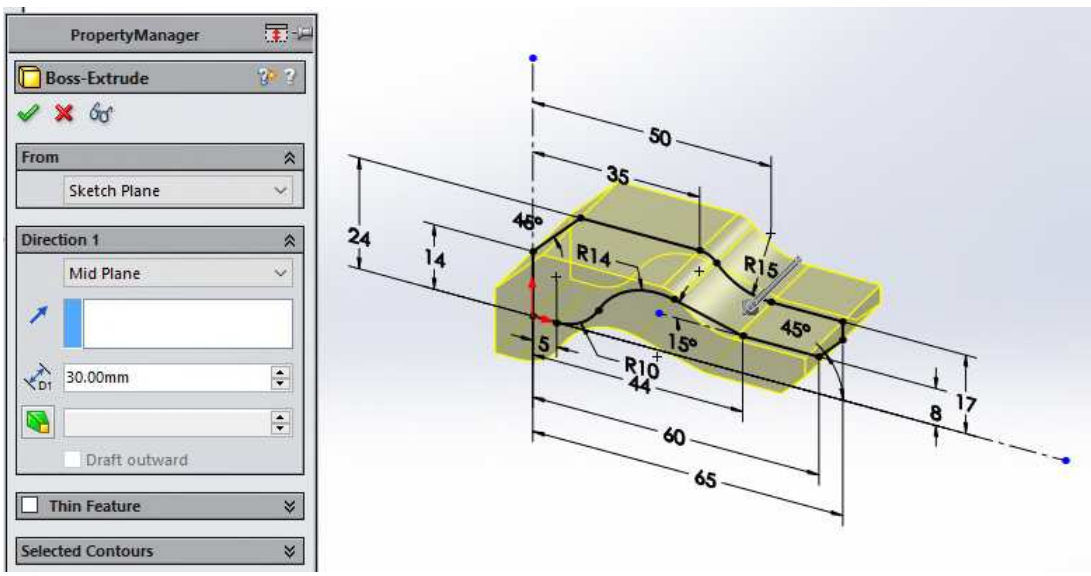

Step 2

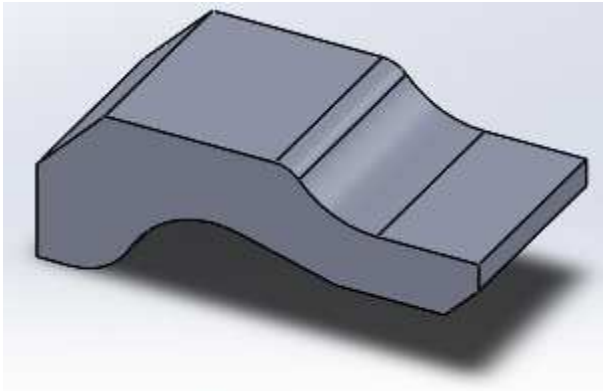

Step 3

Introduction to SolidWorks A Comprehensive Guide with Applications in 3D Printing 1st edition Onwubolu Solutions Manual

7. Problem 2-7

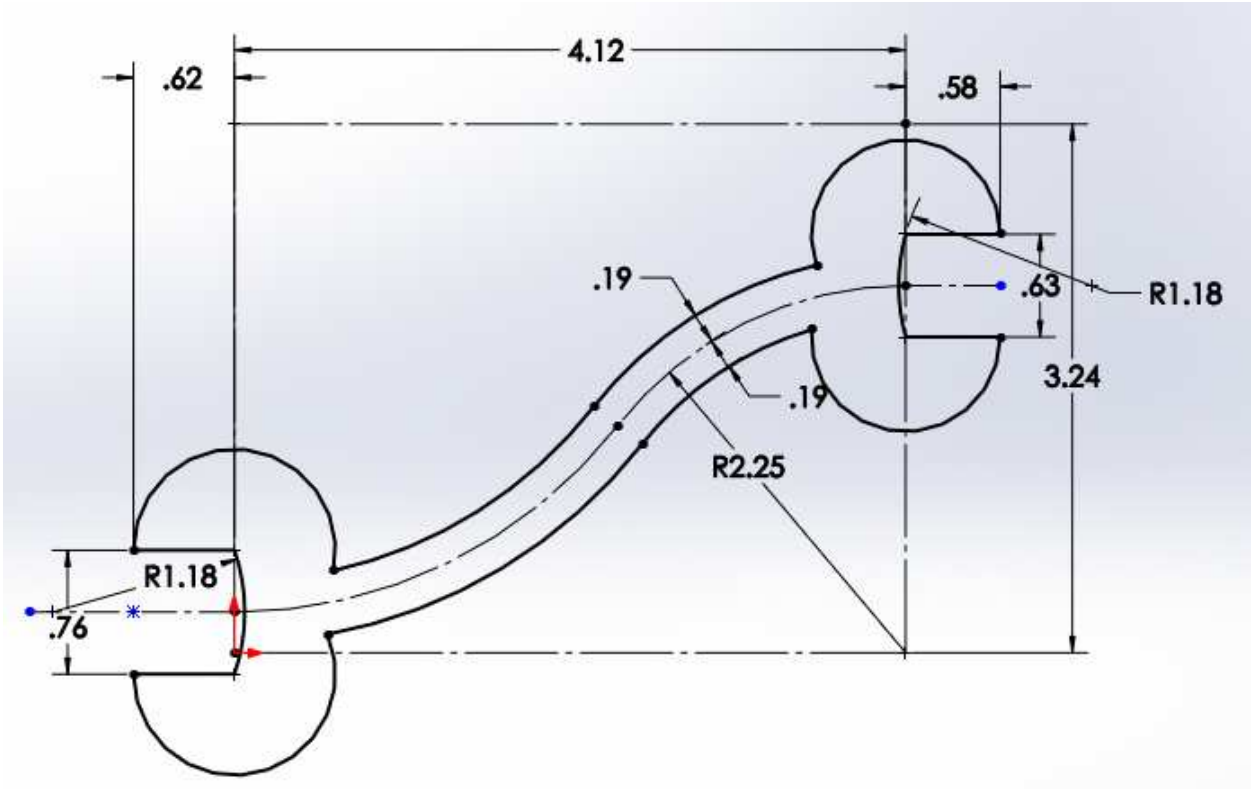

Step 1

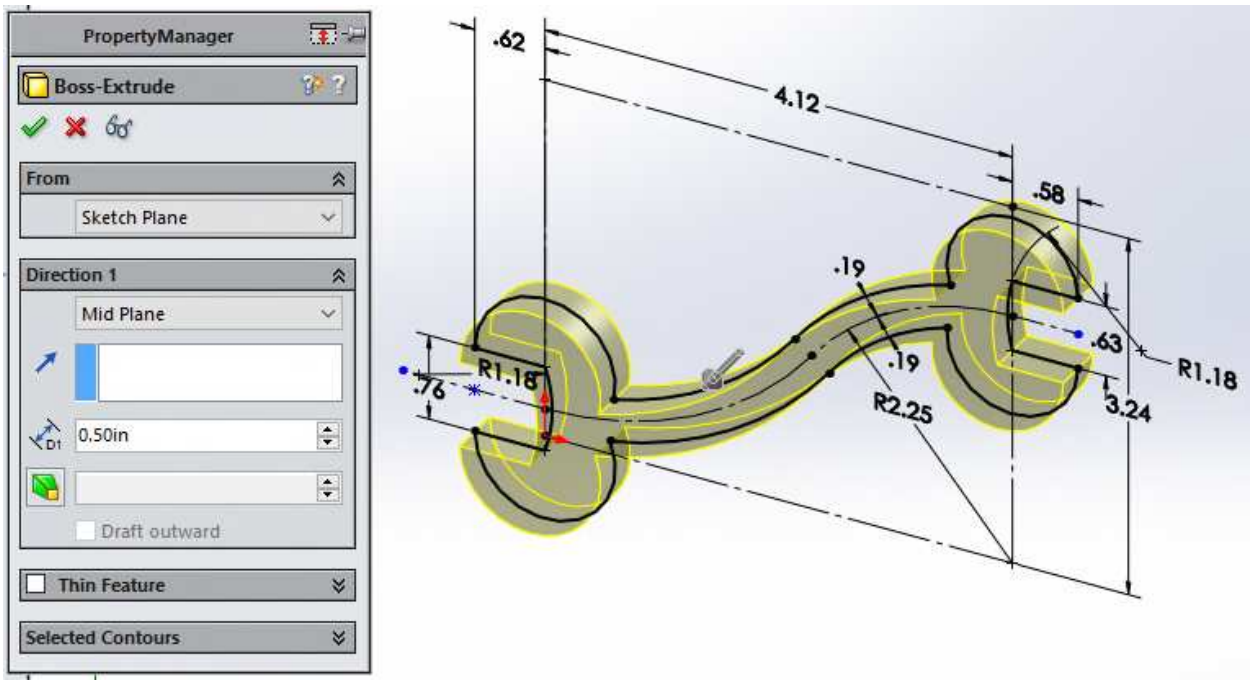

Step 2

Introduction to SolidWorks A Comprehensive Guide with Applications in 3D Printing 1st edition Onwubolu Solutions Manual

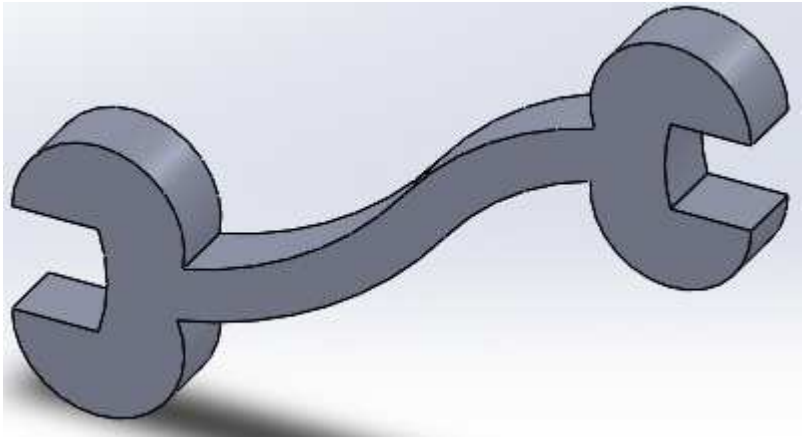

Step 3

Introduction to SolidWorks A Comprehensive Guide with Applications in 3D Printing 1st edition Onwubolu Solutions Manual

8. Problem 2-8

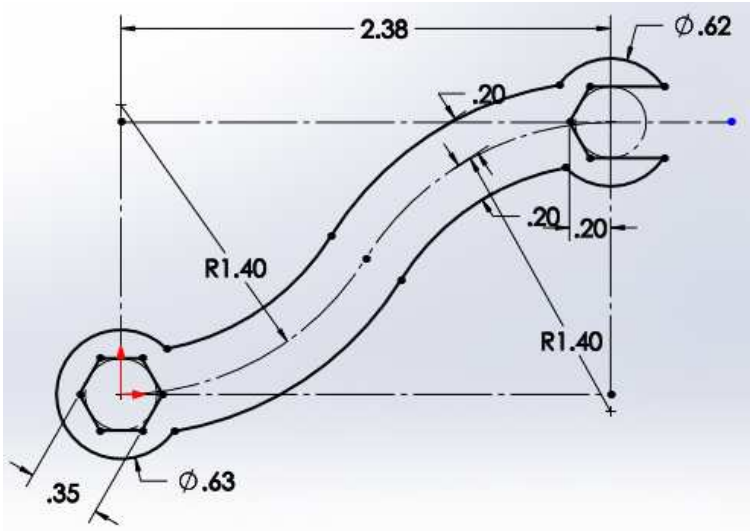

Step1

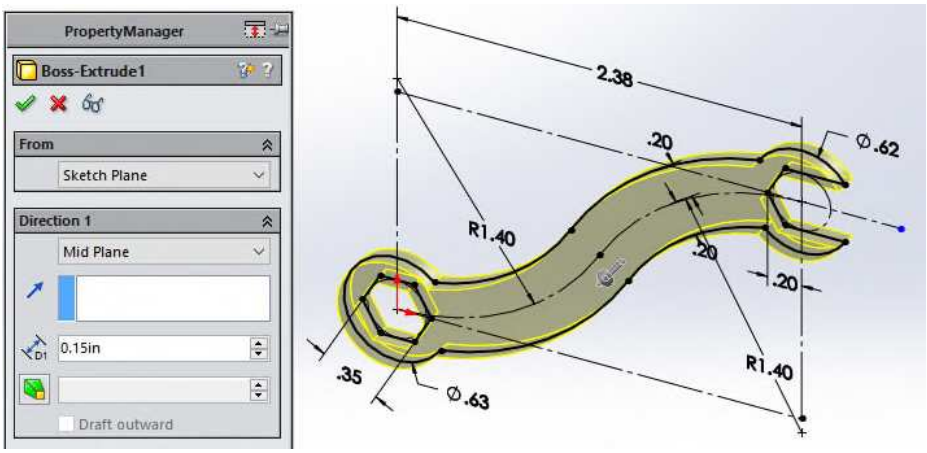

Step 2

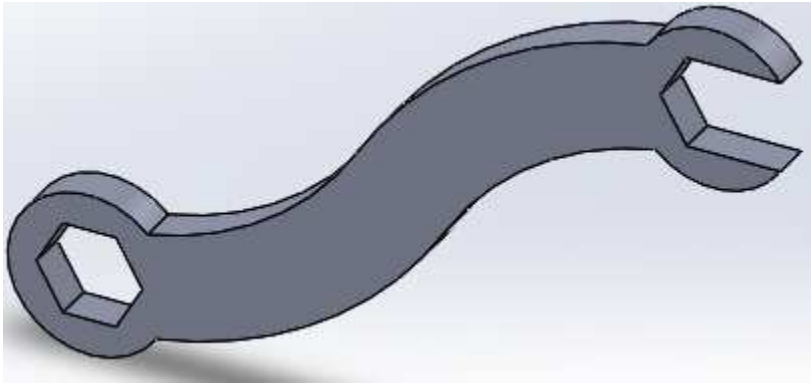

Step 3

Introduction to SolidWorks A Comprehensive Guide with Applications in 3D Printing 1st edition Onwubolu Solutions Manual

9. Problem 2-9

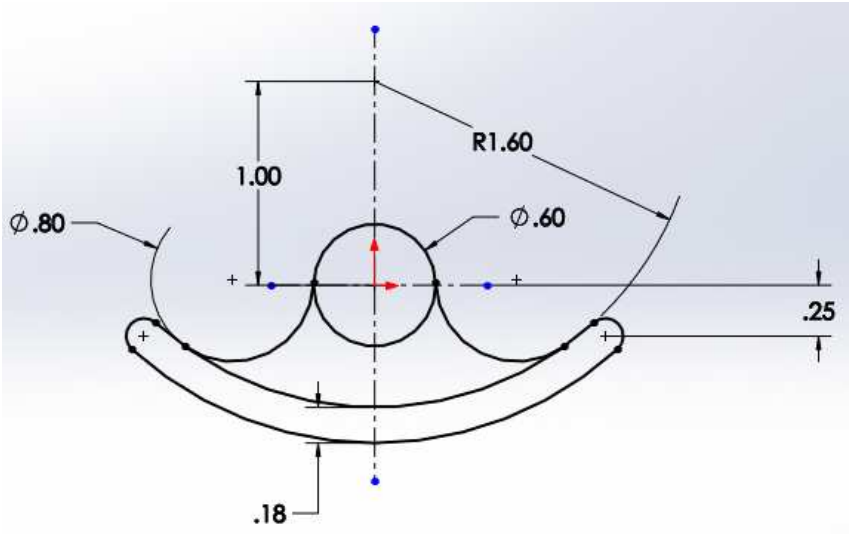

Step 1

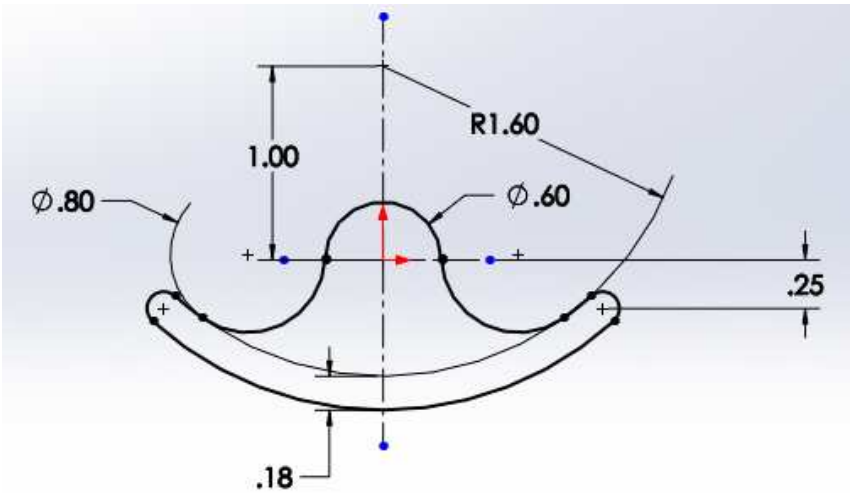

Step 2

Introduction to SolidWorks A Comprehensive Guide with Applications in 3D Printing 1st edition Onwubolu Solutions Manual

10. Problem 2-10

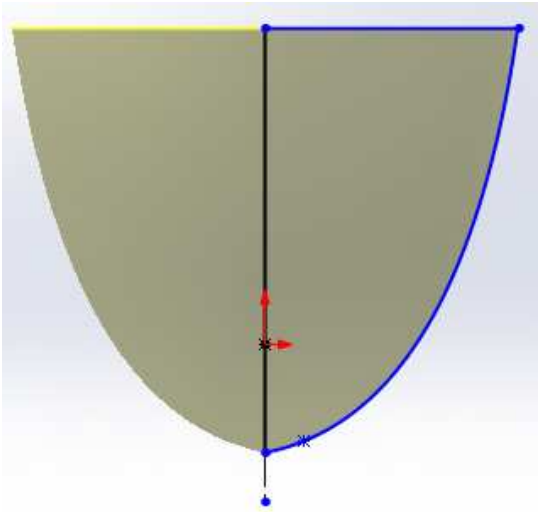

Step 1

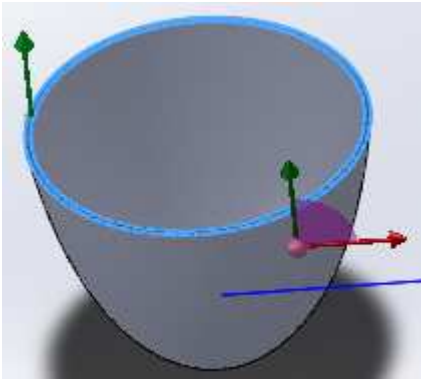

Step 2

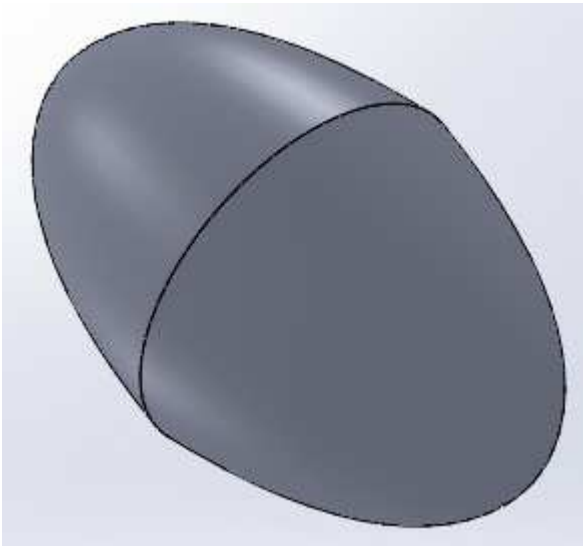

Step 3

Introduction to SolidWorks A Comprehensive Guide with Applications in 3D Printing 1st edition Onwubolu Solutions Manual

11. Problem 2-11

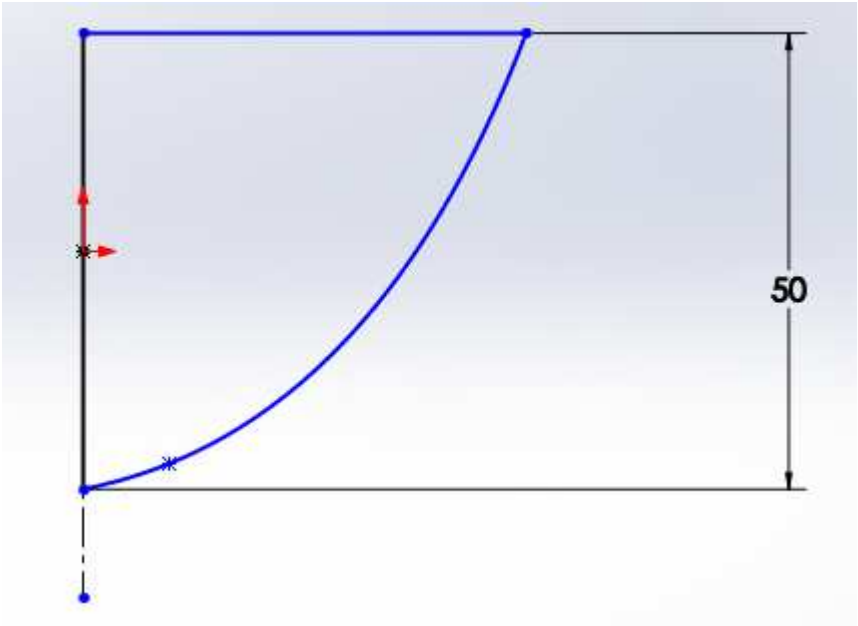

Step 1

Step 2

Introduction to SolidWorks A Comprehensive Guide with Applications in 3D Printing 1st edition Onwubolu Solutions Manual

12. Problem 2-12

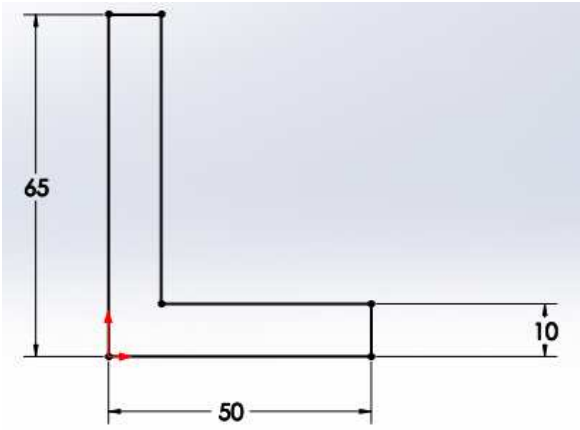

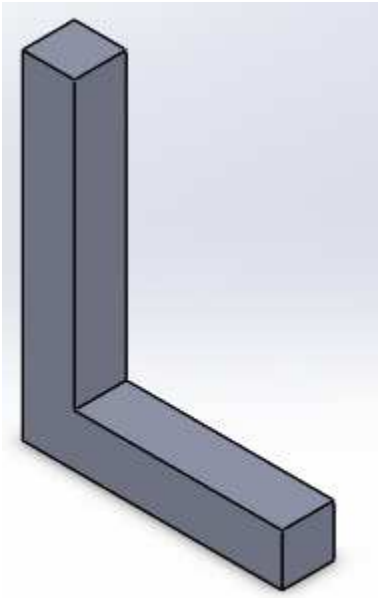

Introduction to SolidWorks A Comprehensive Guide with Applications in 3D Printing 1st edition Onwubolu Solutions Manual

13. Problem 2-13

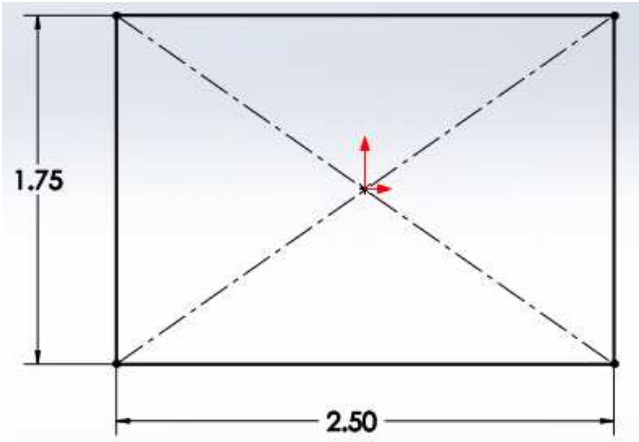

Step 1

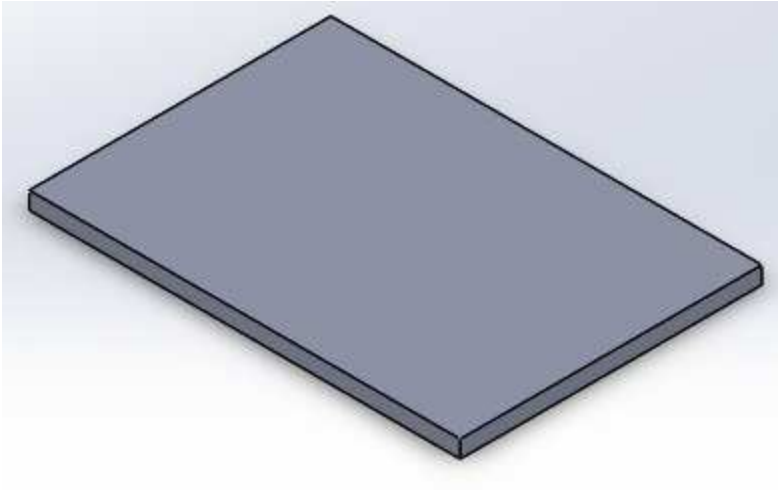

Step 2

Introduction to SolidWorks A Comprehensive Guide with Applications in 3D Printing 1st edition Onwubolu Solutions Manual

14. Problem 2-14

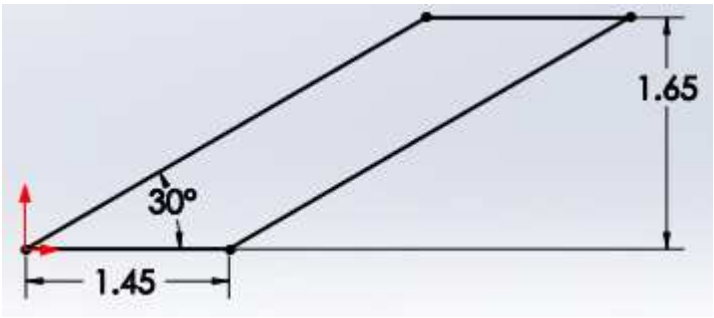

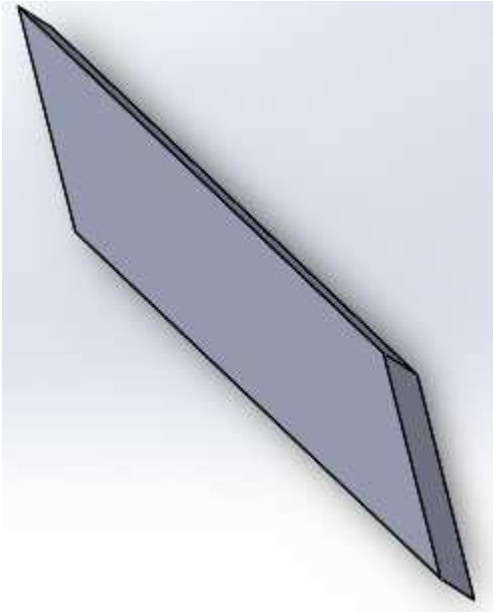

Step 2

Introduction to SolidWorks A Comprehensive Guide with Applications in 3D Printing 1st edition Onwubolu Solutions Manual

15. Problem 2-15

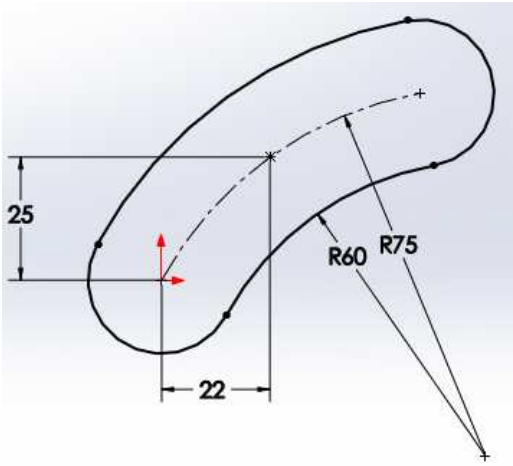

Step 1

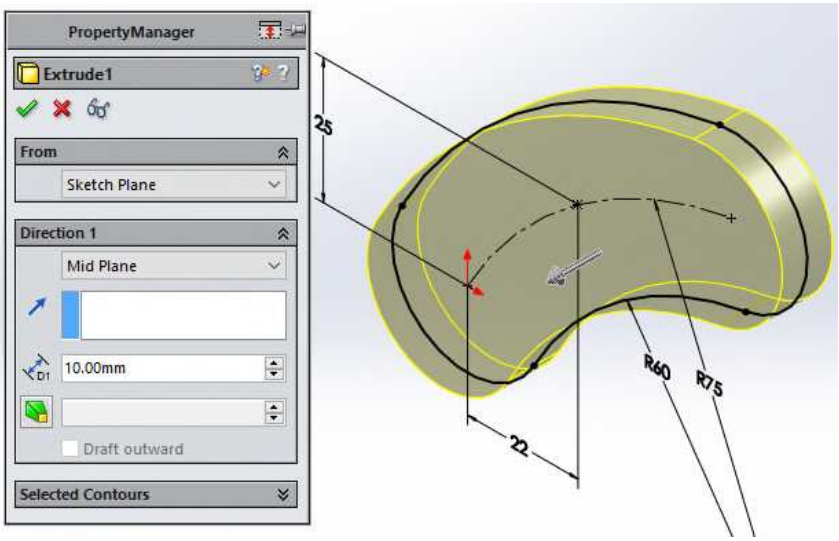

Step 2

Introduction to SolidWorks A Comprehensive Guide with Applications in 3D Printing 1st edition Onwubolu Solutions Manual

16. Problem 2-16

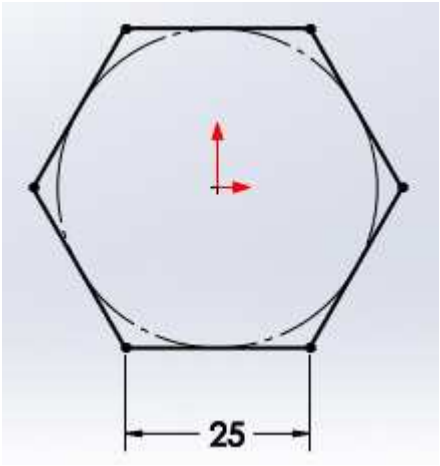

Step 1

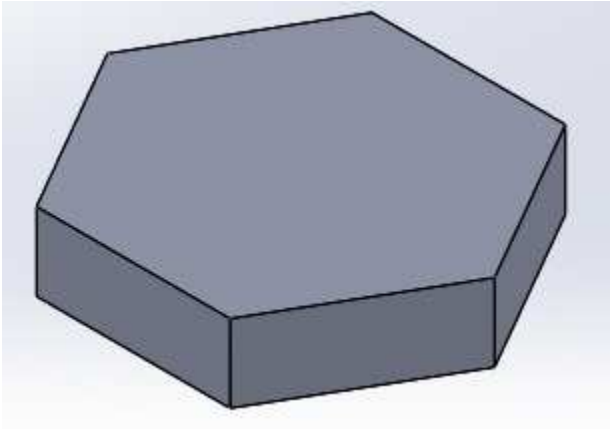

Step 2

Introduction to SolidWorks A Comprehensive Guide with Applications in 3D Printing 1st edition Onwubolu Solutions Manual

17. Problem 2-17

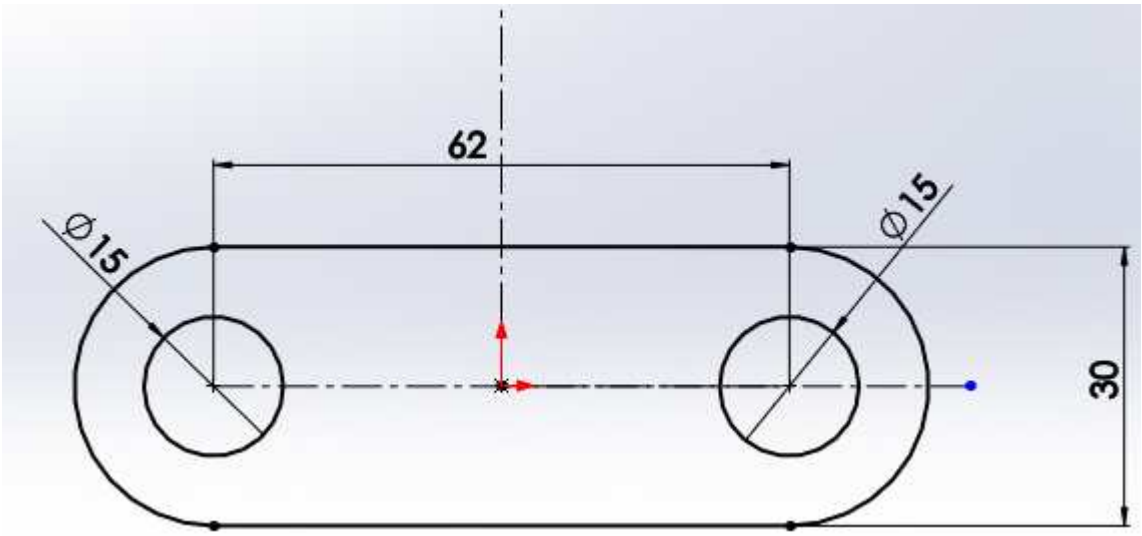

Step 1

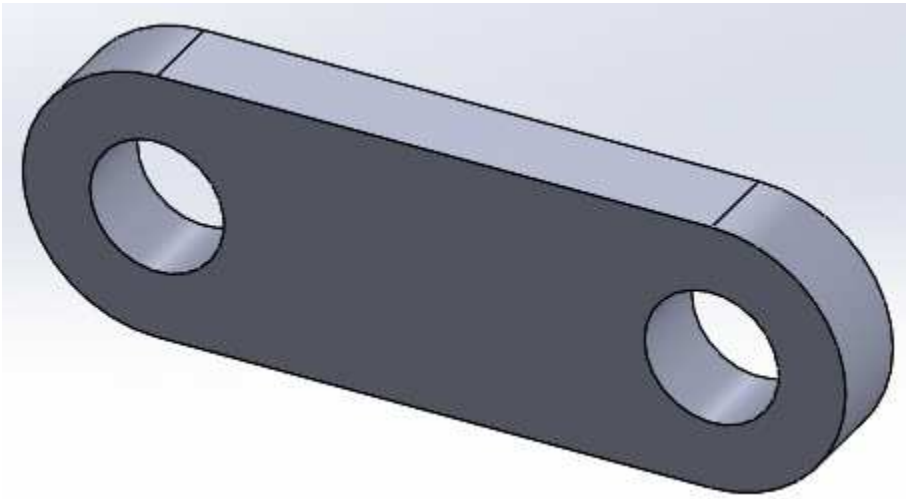

Step 2

Introduction to SolidWorks A Comprehensive Guide with Applications in 3D Printing 1st edition Onwubolu Solutions Manual

Chapter 3: Features

1. Problem 3-1

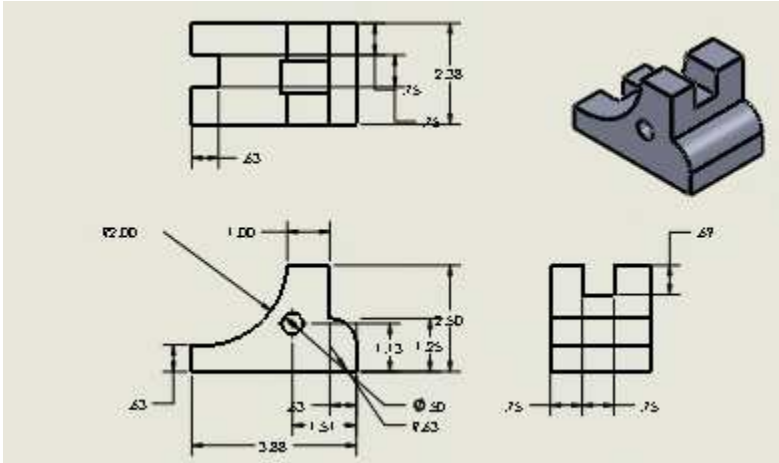

Given problem

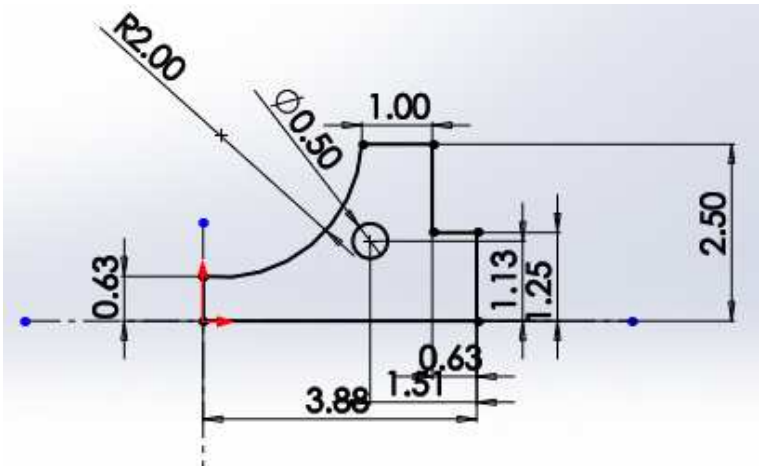

Step 1

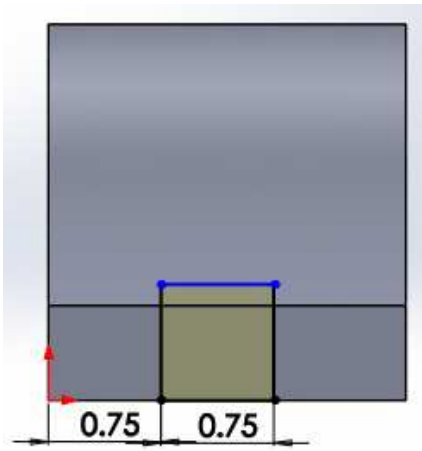

Step 2

Introduction to SolidWorks A Comprehensive Guide with Applications in 3D Printing 1st edition Onwubolu Solutions Manual

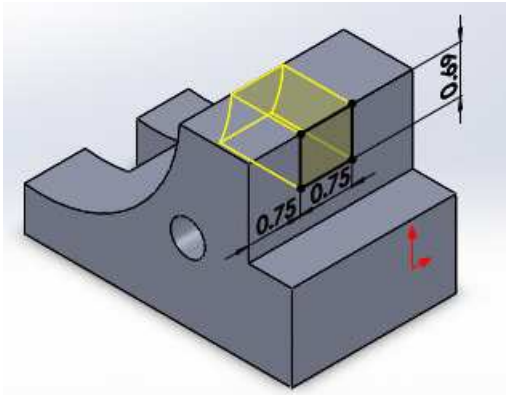

Step 3

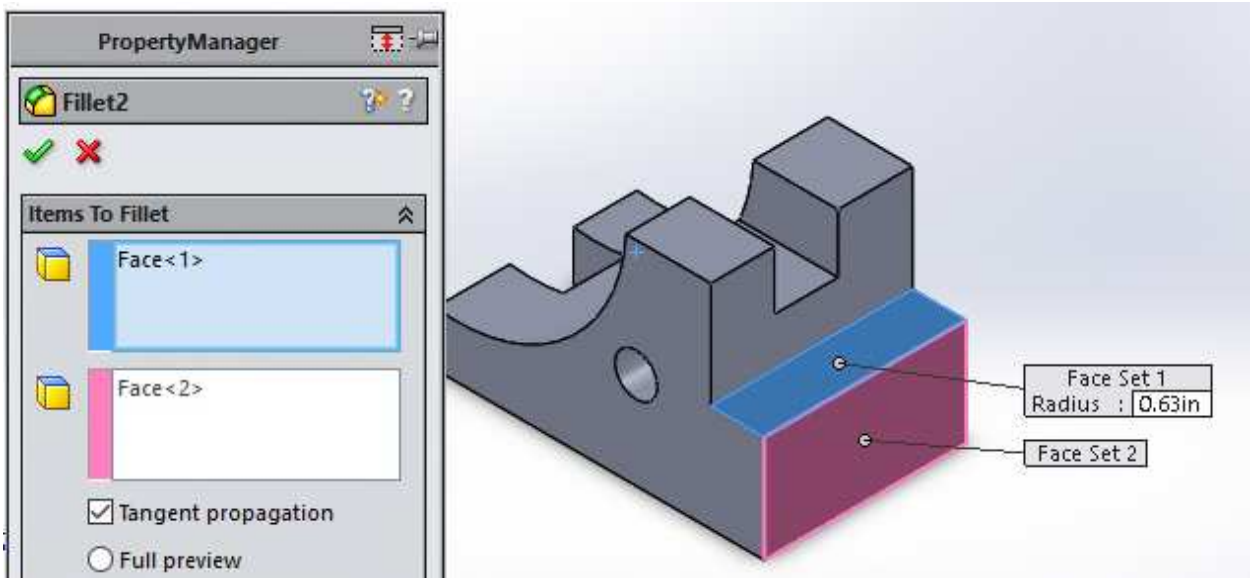

Step 4

Introduction to SolidWorks A Comprehensive Guide with Applications in 3D Printing 1st edition Onwubolu Solutions Manual

2. Problem 3-2

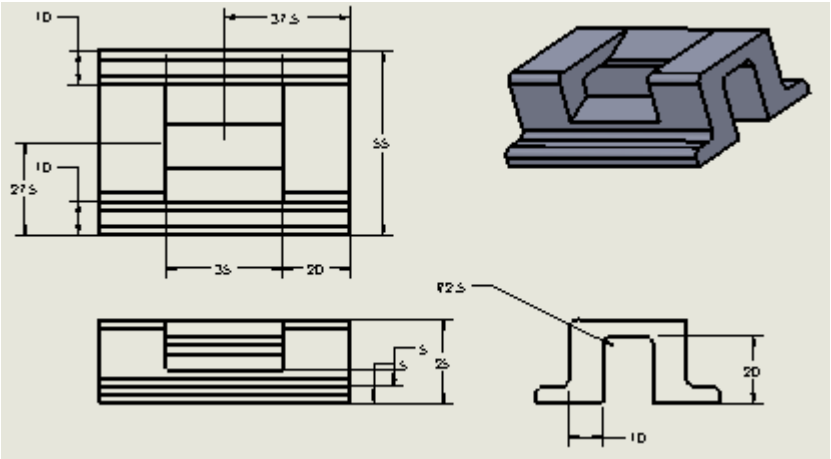

Given problem

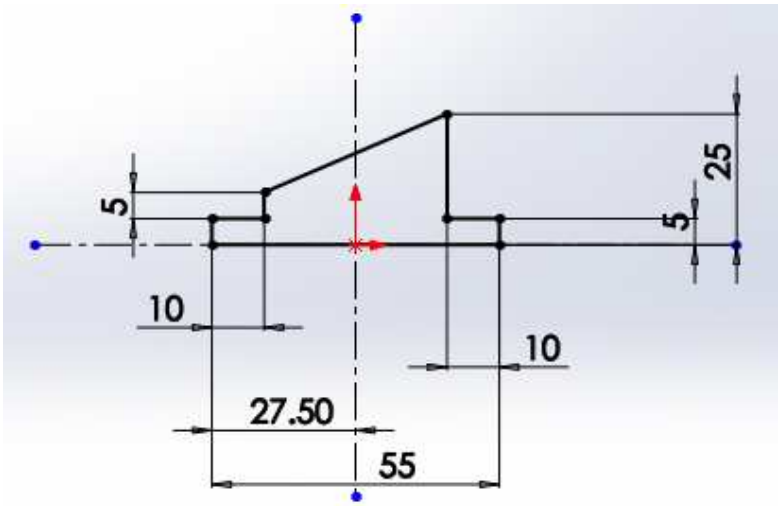

Step 1

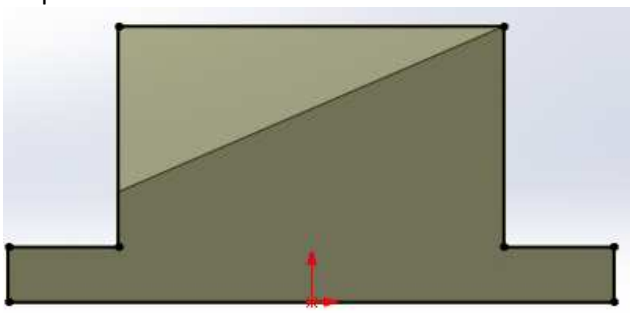

Step 2

Introduction to SolidWorks A Comprehensive Guide with Applications in 3D Printing 1st edition Onwubolu Solutions Manual

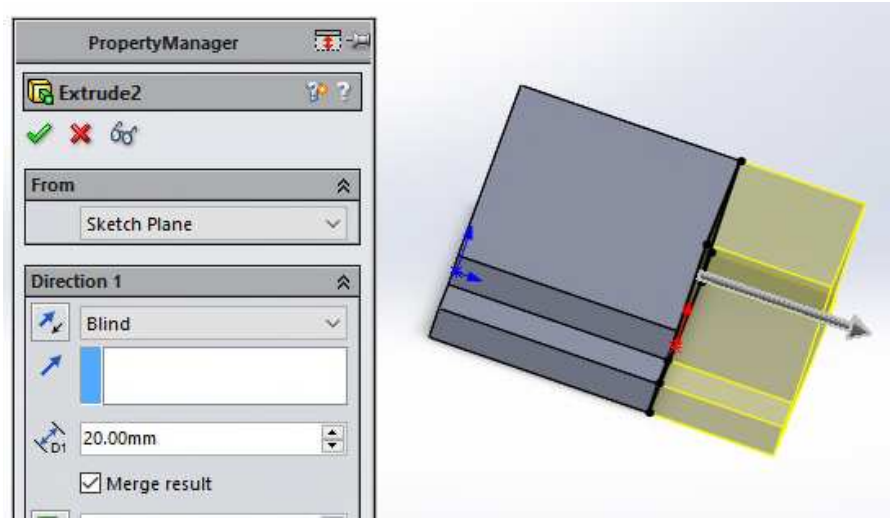

Step 3

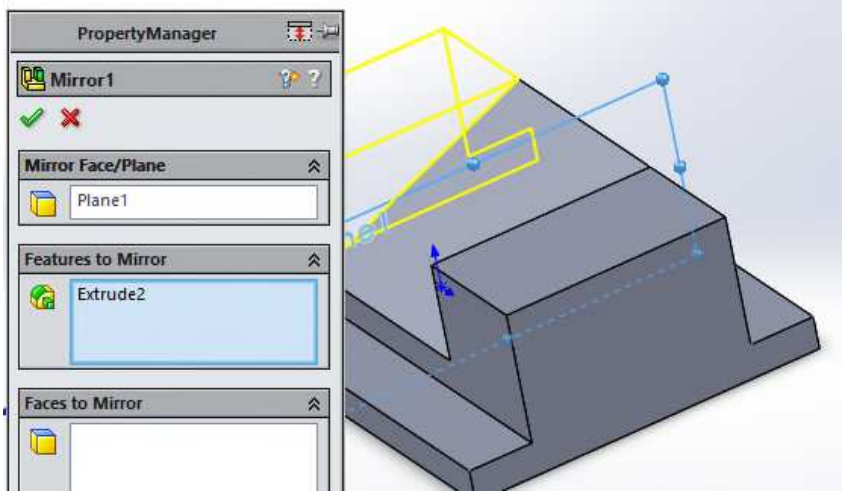

Step 4

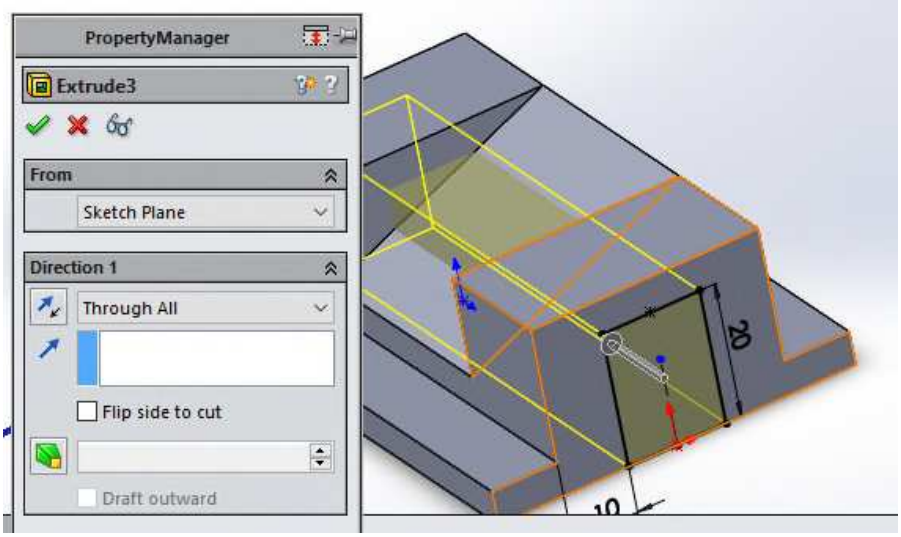

Step 5

Introduction to SolidWorks A Comprehensive Guide with Applications in 3D Printing 1st edition Onwubolu Solutions Manual

3. Problem 3-3

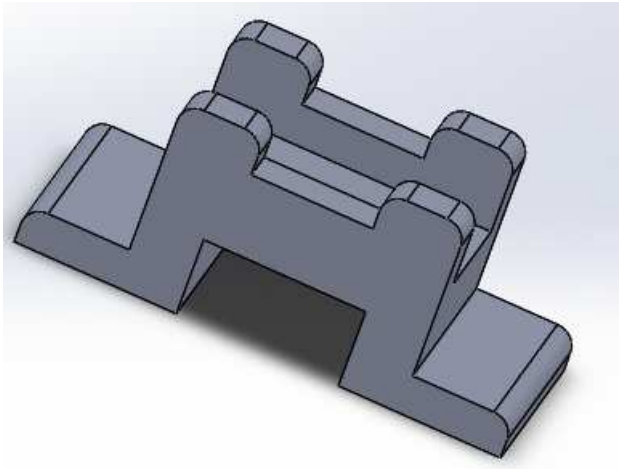

Step 1

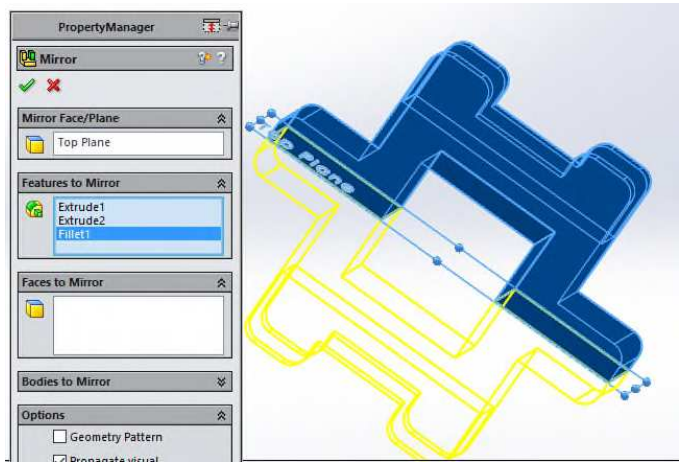

Step 2

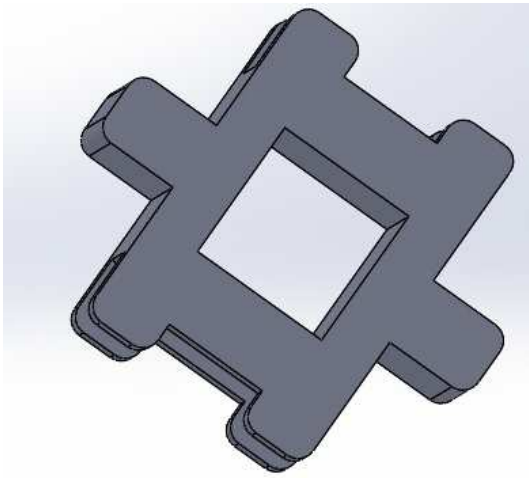

Step 3

Introduction to SolidWorks A Comprehensive Guide with Applications in 3D Printing 1st edition Onwubolu Solutions Manual

Chapter 4: Part Modeling—CSWA Preparations

1. Problem 4-1

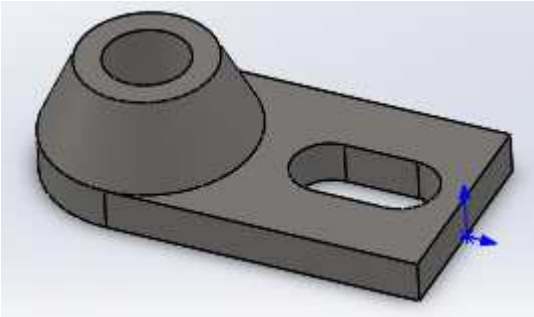

Step 1

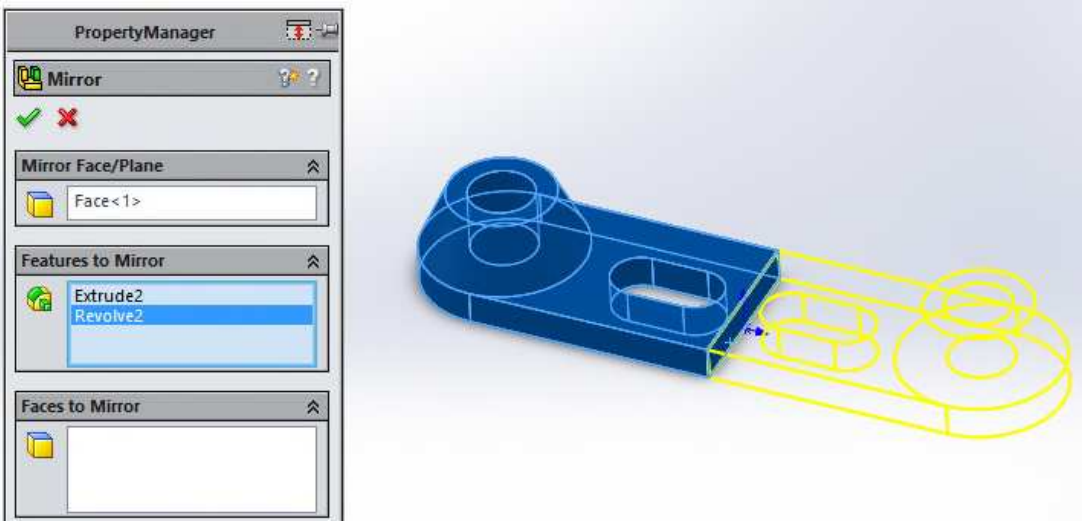

Step 2

Introduction to SolidWorks A Comprehensive Guide with Applications in 3D Printing 1st edition Onwubolu Solutions Manual

2. Problem 4-2

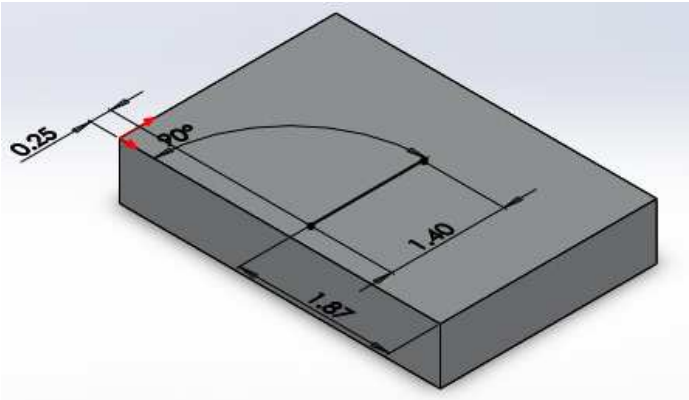

Step 1

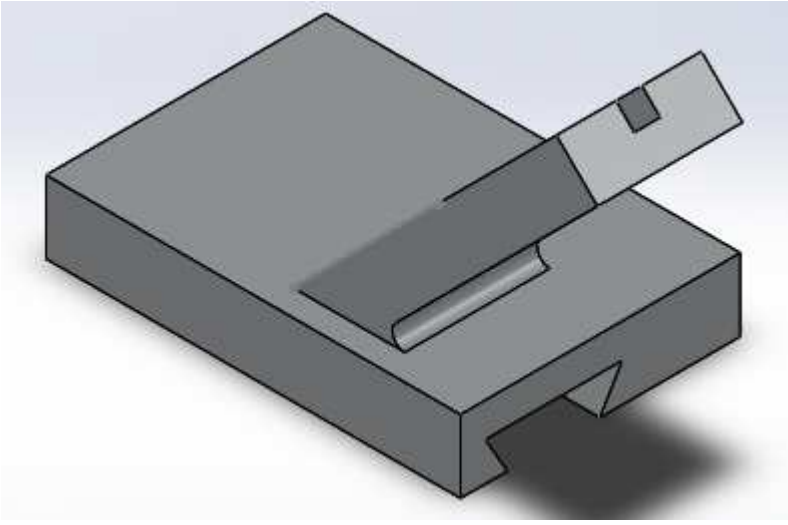

Step 2

Introduction to SolidWorks A Comprehensive Guide with Applications in 3D Printing 1st edition Onwubolu Solutions Manual

3. Problem 4-3

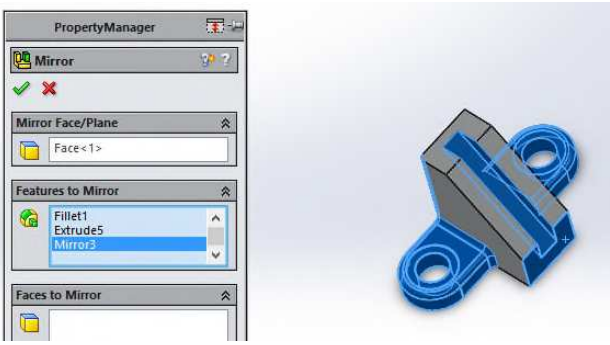

Step 1

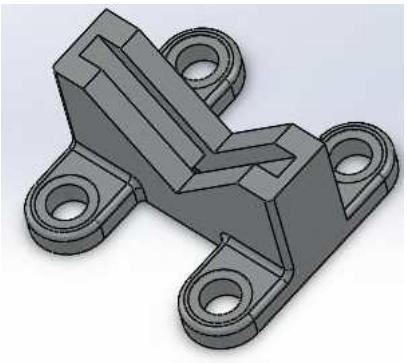

Step 2

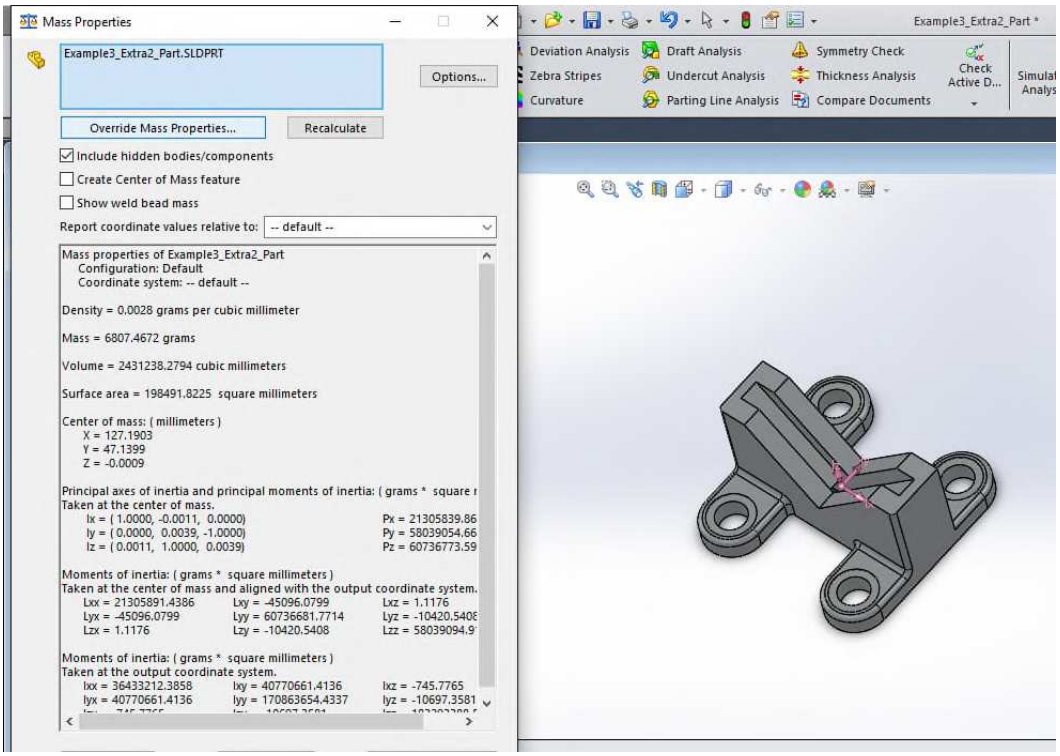

Step 3

Introduction to SolidWorks A Comprehensive Guide with Applications in 3D Printing 1st edition Onwubolu Solutions Manual

4. Problem 4-4

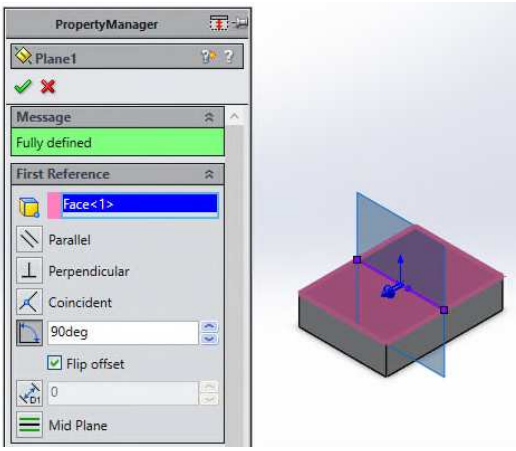

Step 1

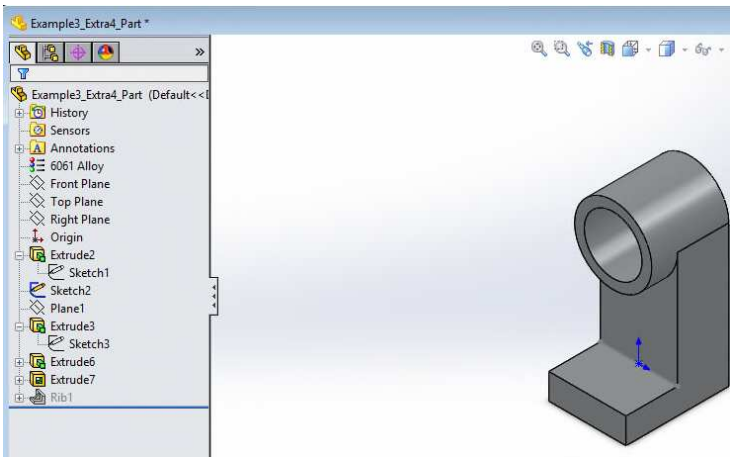

Step 2 [Note: rib is lost]

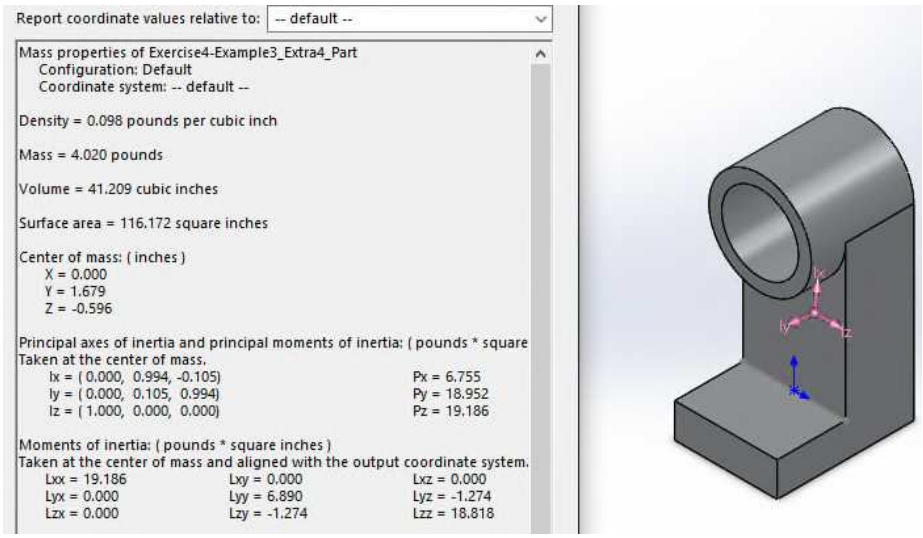

Step 3

Introduction to SolidWorks A Comprehensive Guide with Applications in 3D Printing 1st edition Onwubolu Solutions Manual

Chapter 5: Part Modeling—CSWA Preparations

1. Problem 5-1

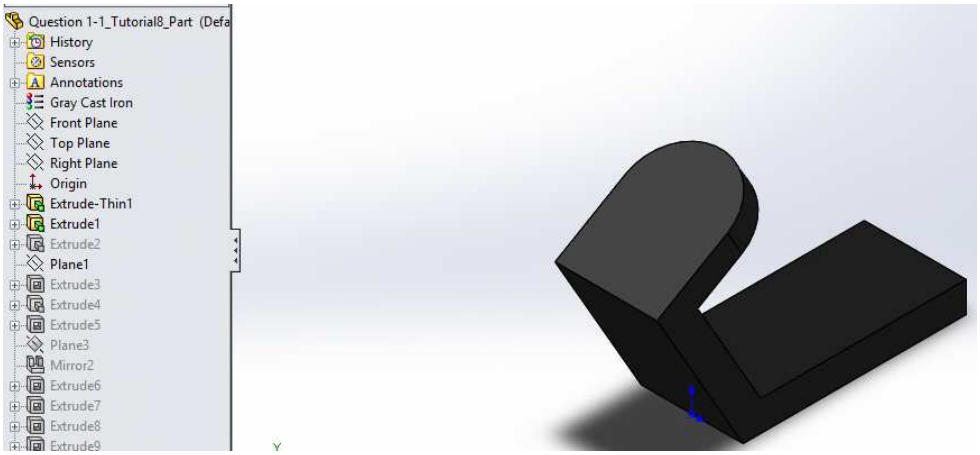

Step 1

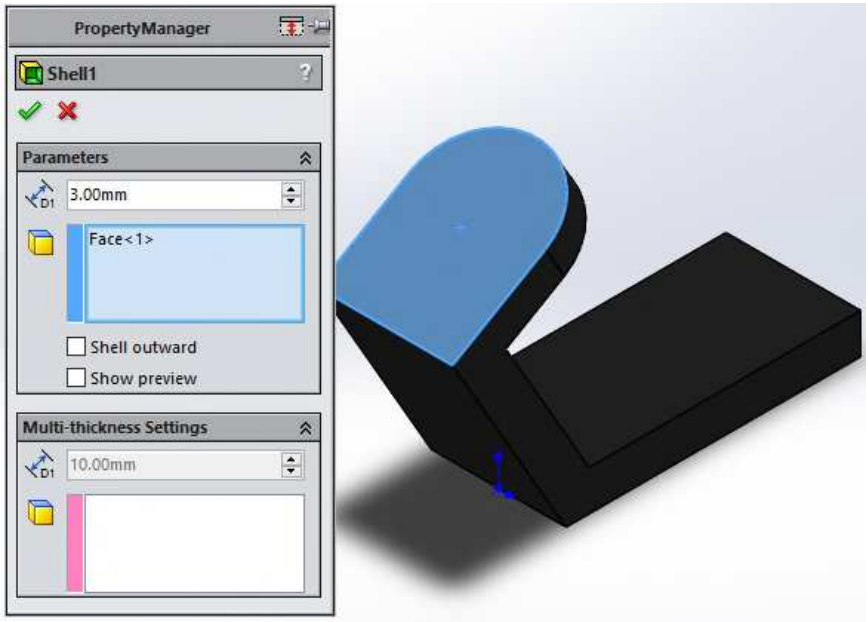

Step 2

Introduction to SolidWorks A Comprehensive Guide with Applications in 3D Printing 1st edition Onwubolu Solutions Manual

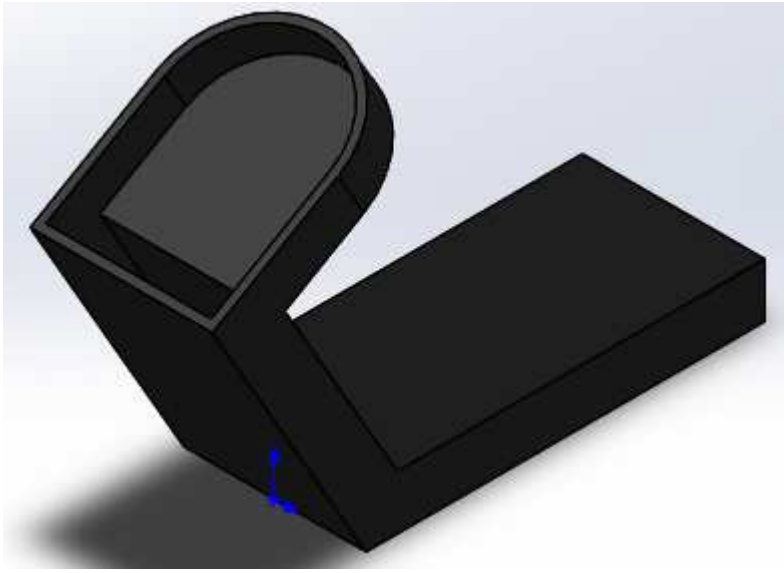

Step 3

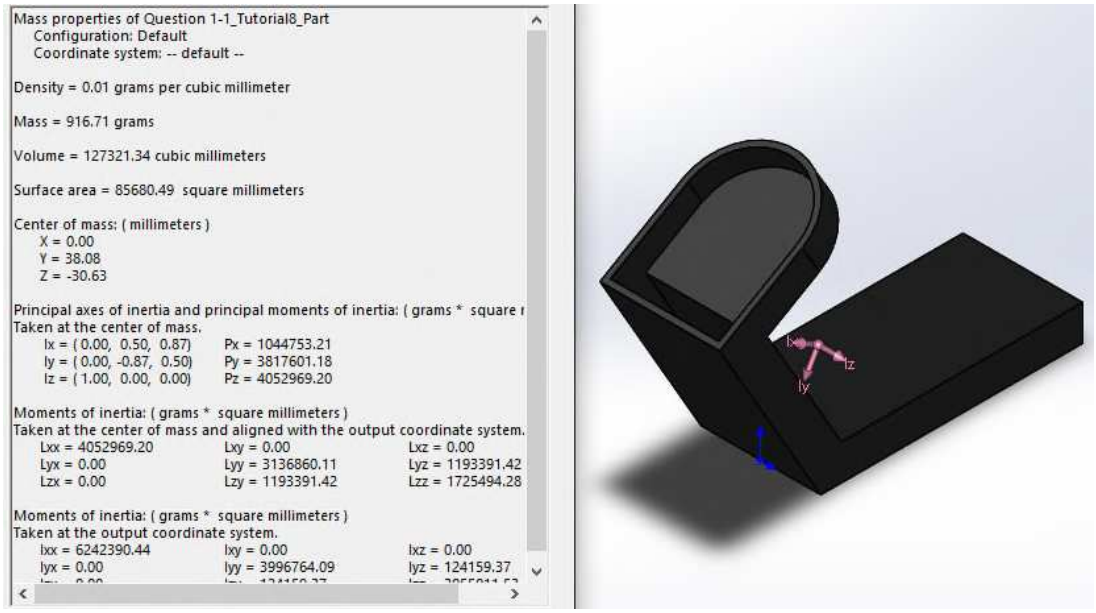

Step 4

Introduction to SolidWorks A Comprehensive Guide with Applications in 3D Printing 1st edition Onwubolu Solutions Manual

2. Problem 5-2

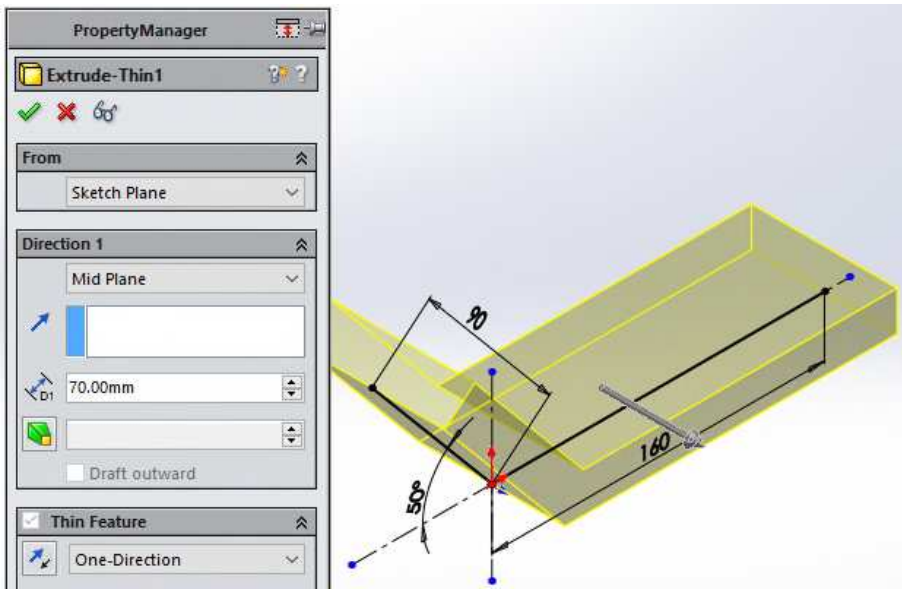

Step 1

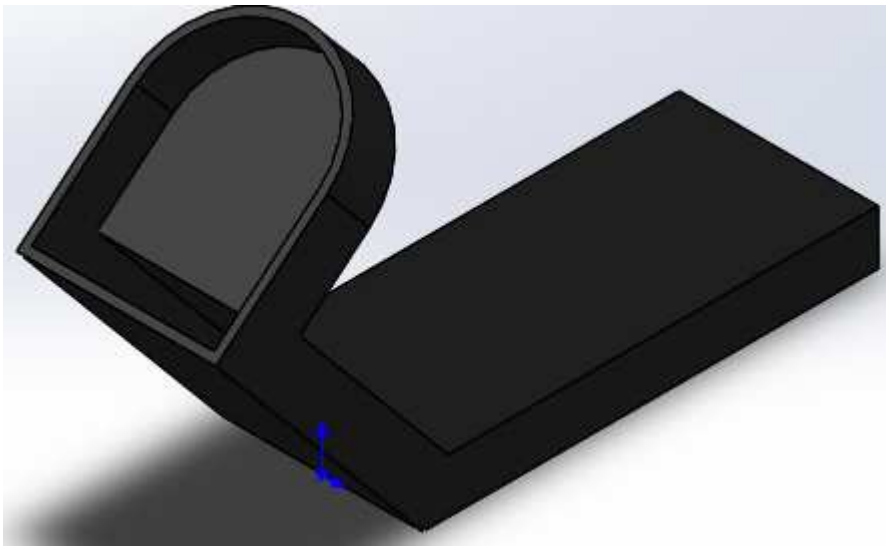

Step 2

Introduction to SolidWorks A Comprehensive Guide with Applications in 3D Printing 1st edition Onwubolu Solutions Manual

Projects

3. P1

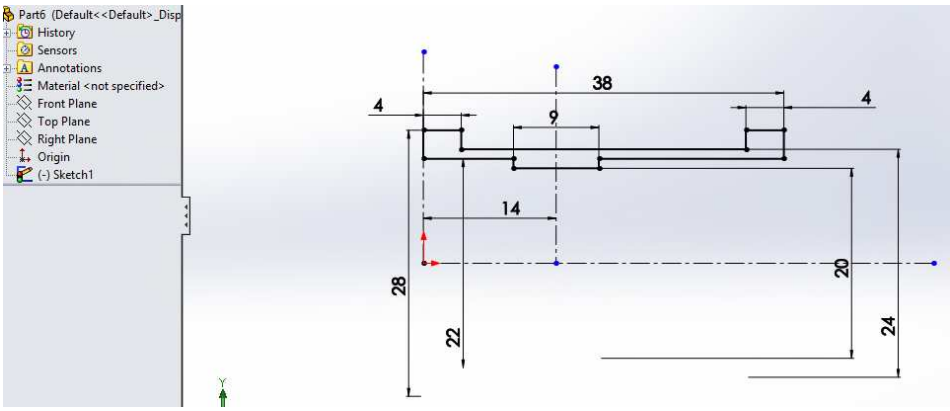

Step 1

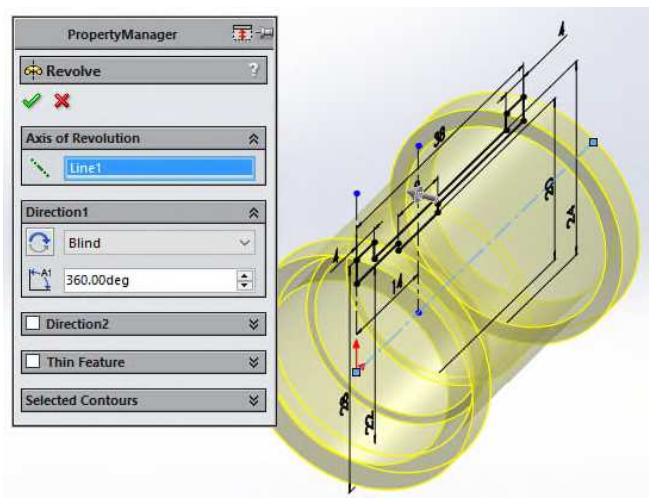

Step 2

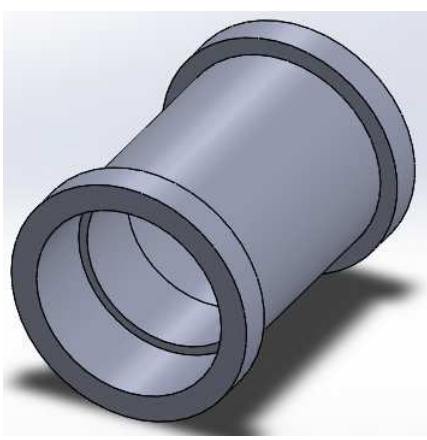

Step 3

Introduction to SolidWorks A Comprehensive Guide with Applications in 3D Printing 1st edition Onwubolu Solutions Manual

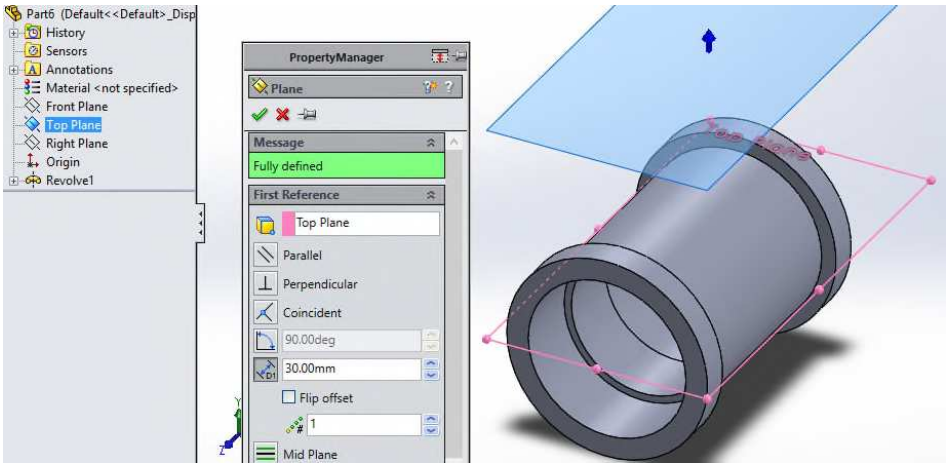

Step 4

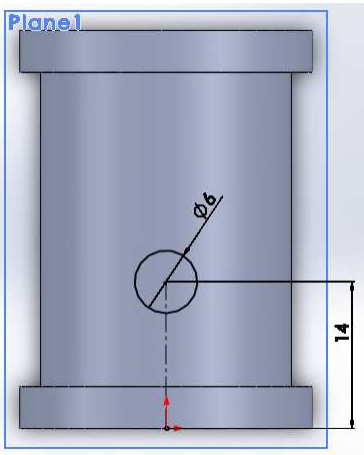

Step 5

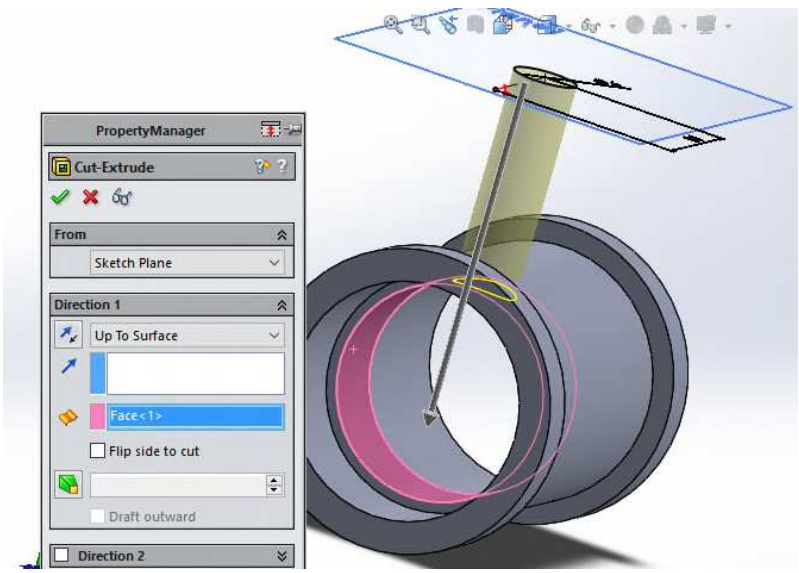

Step 6

Introduction to SolidWorks A Comprehensive Guide with Applications in 3D Printing 1st edition Onwubolu Solutions Manual

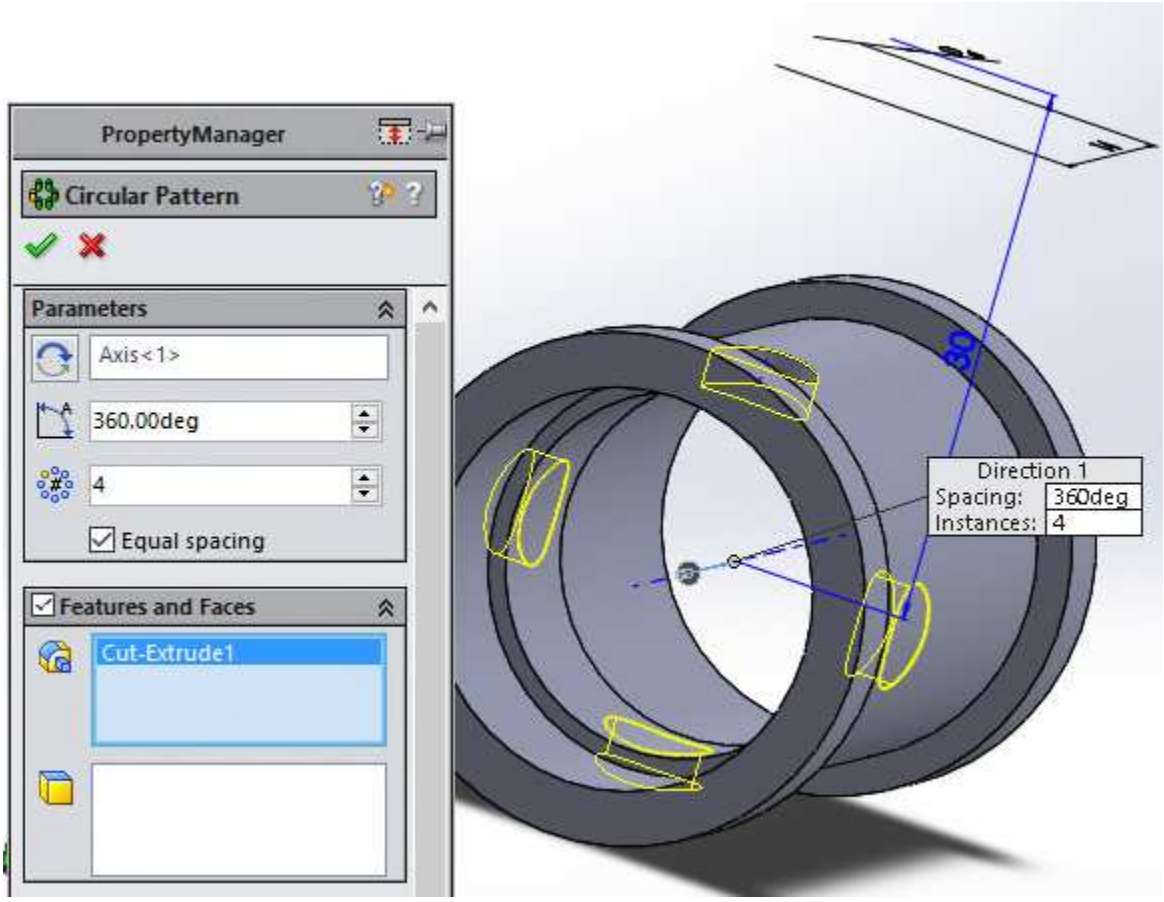

Step 7

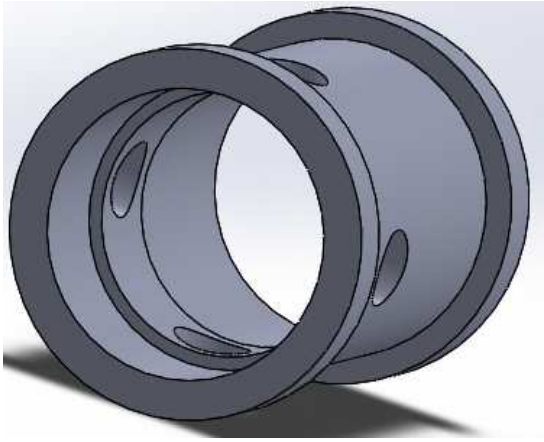

Step 8

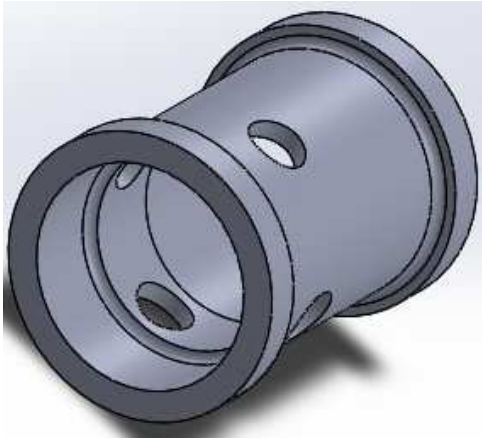

Step 9

Introduction to SolidWorks A Comprehensive Guide with Applications in 3D Printing 1st edition Onwubolu Solutions Manual

4. P2

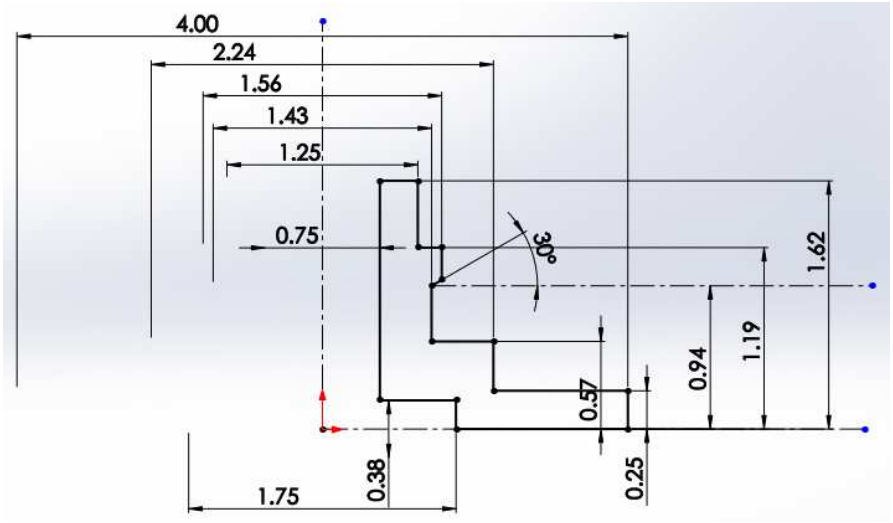

Step 1

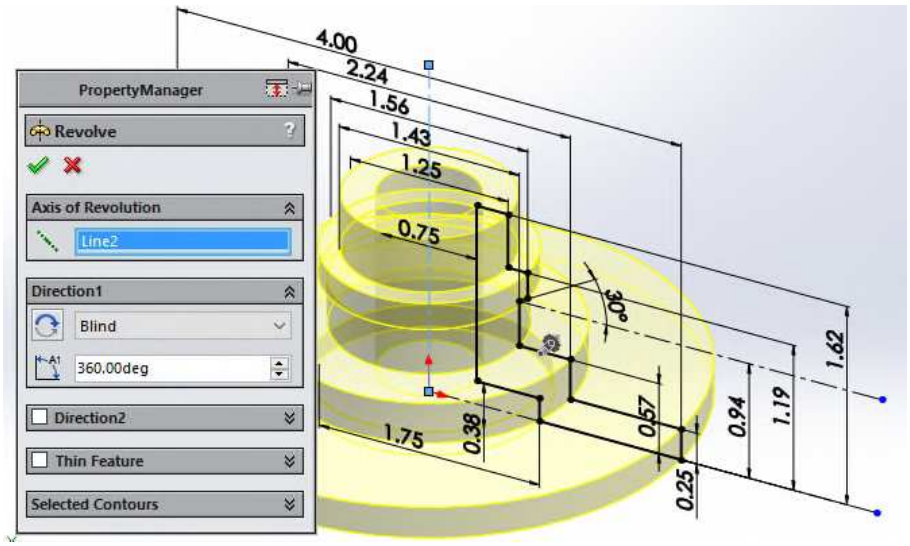

Step 2

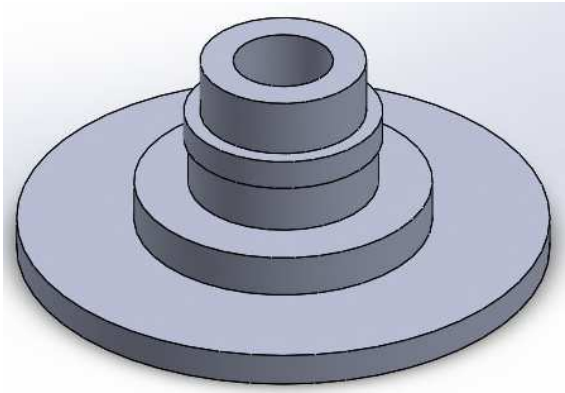

Step 3

Introduction to SolidWorks A Comprehensive Guide with Applications in 3D Printing 1st edition Onwubolu Solutions Manual

Use all formulas in chapter 30 for design of external threads; note that the diameter of 1.56 will reduce to 1.49.

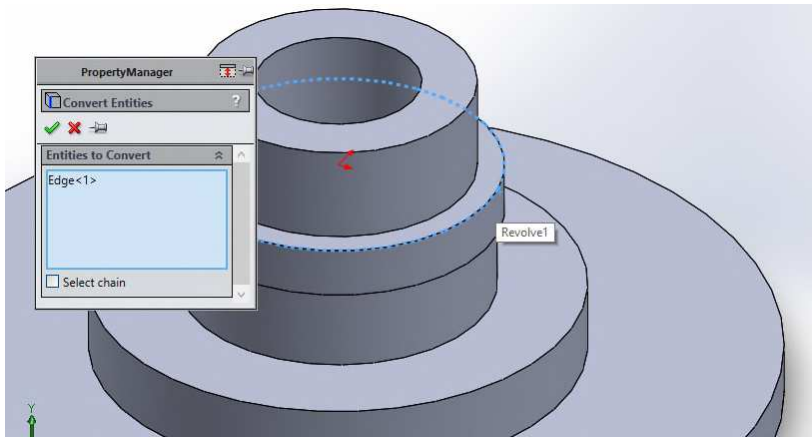

Step 4

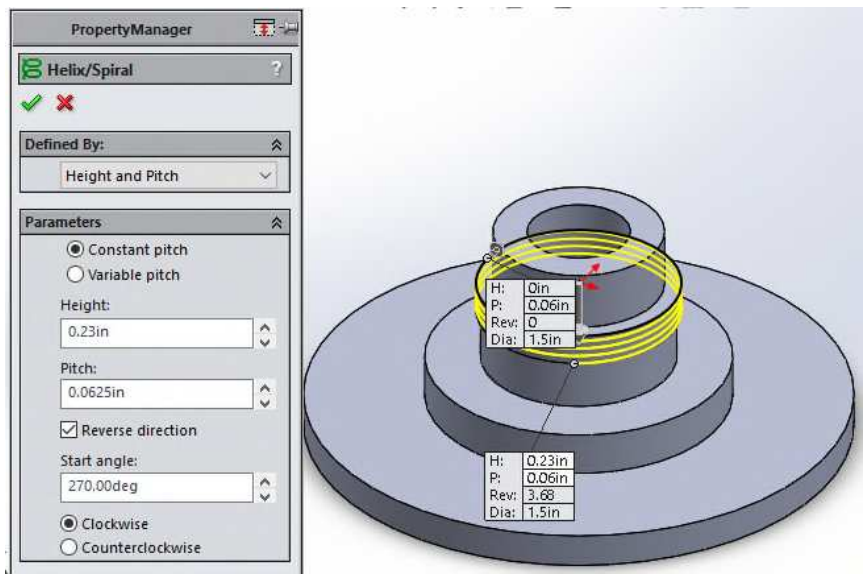

Step 5

Introduction to SolidWorks A Comprehensive Guide with Applications in 3D Printing 1st edition Onwubolu Solutions Manual

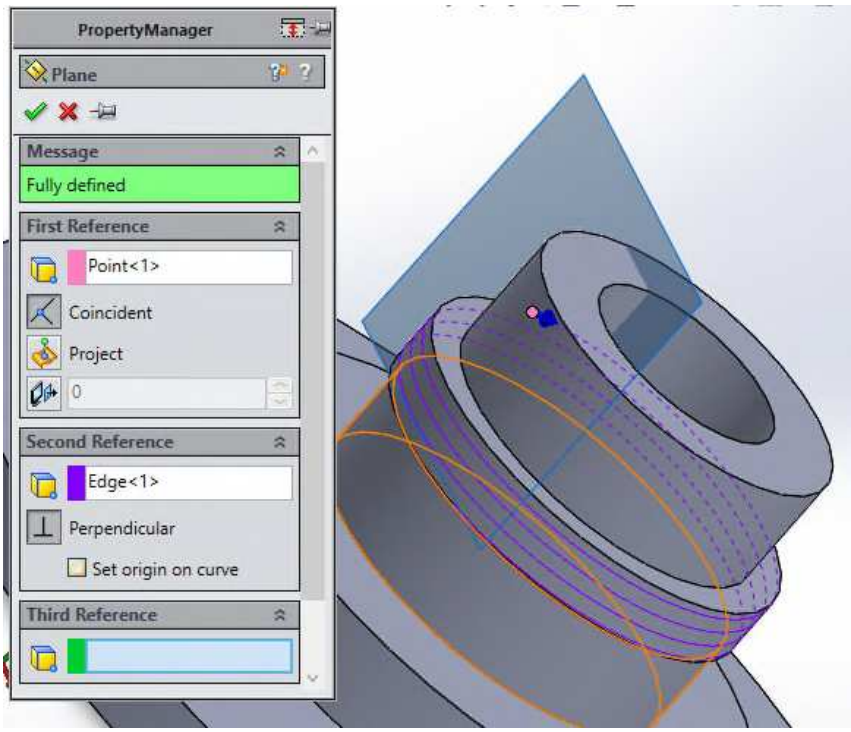

Step 6

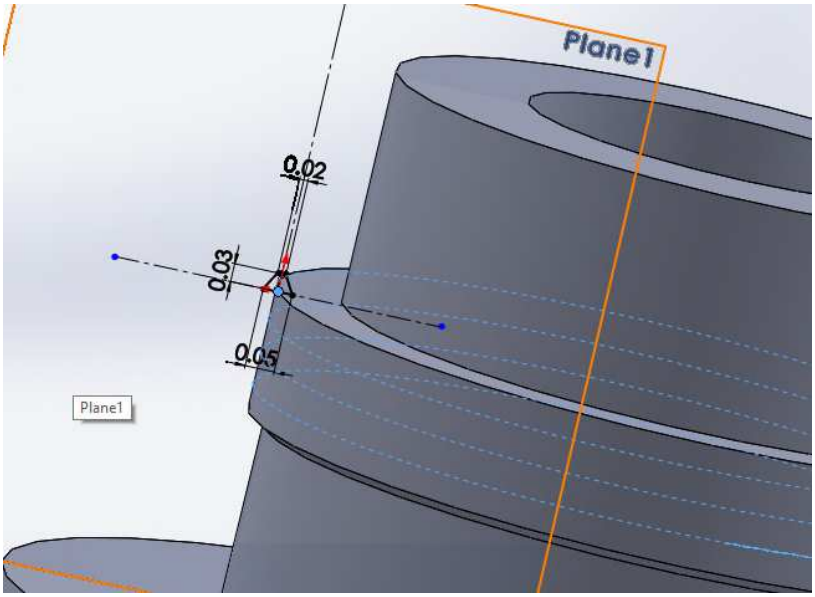

Step 7

Introduction to SolidWorks A Comprehensive Guide with Applications in 3D Printing 1st edition Onwubolu Solutions Manual

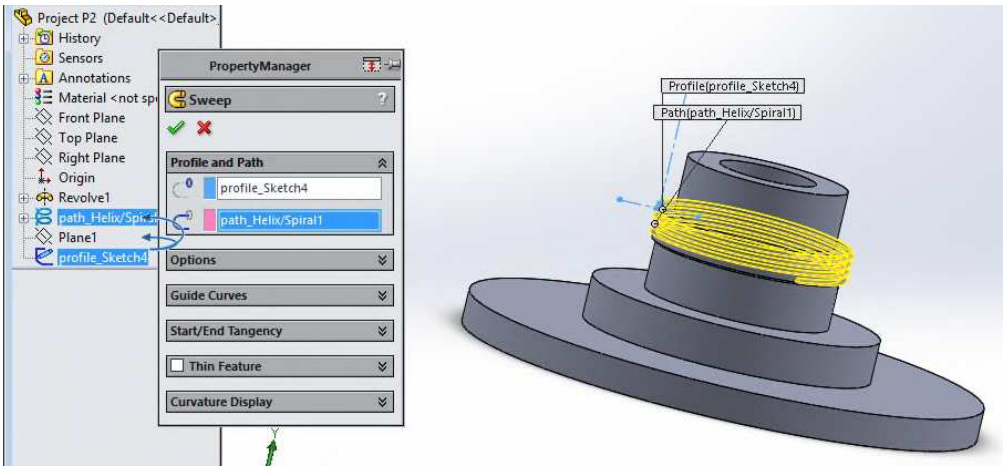

Step 8

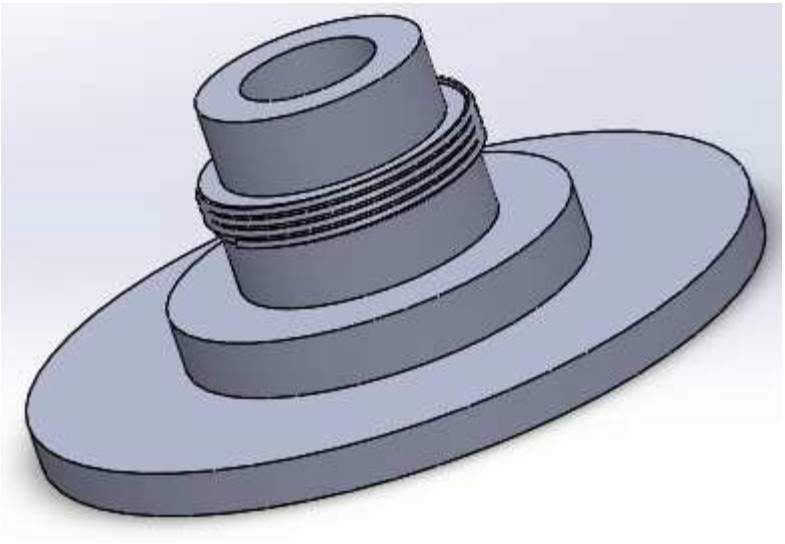

Step 9

Introduction to SolidWorks A Comprehensive Guide with Applications in 3D Printing 1st edition Onwubolu Solutions Manual

5. P2

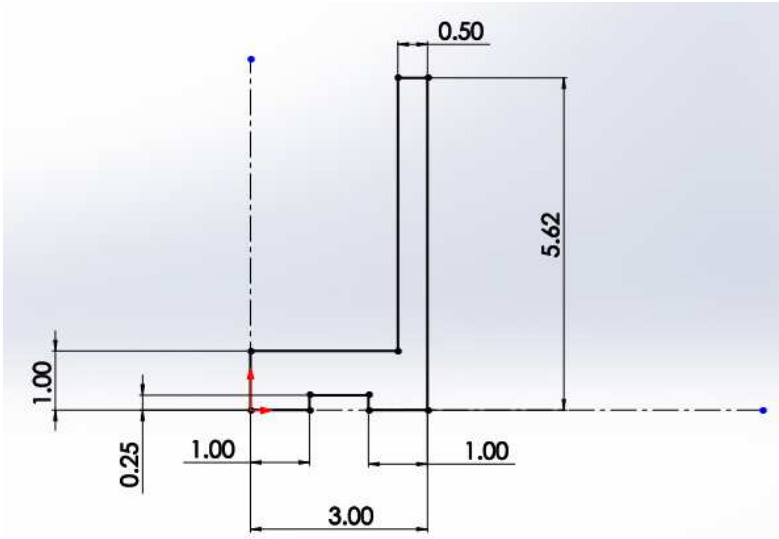

Step 1

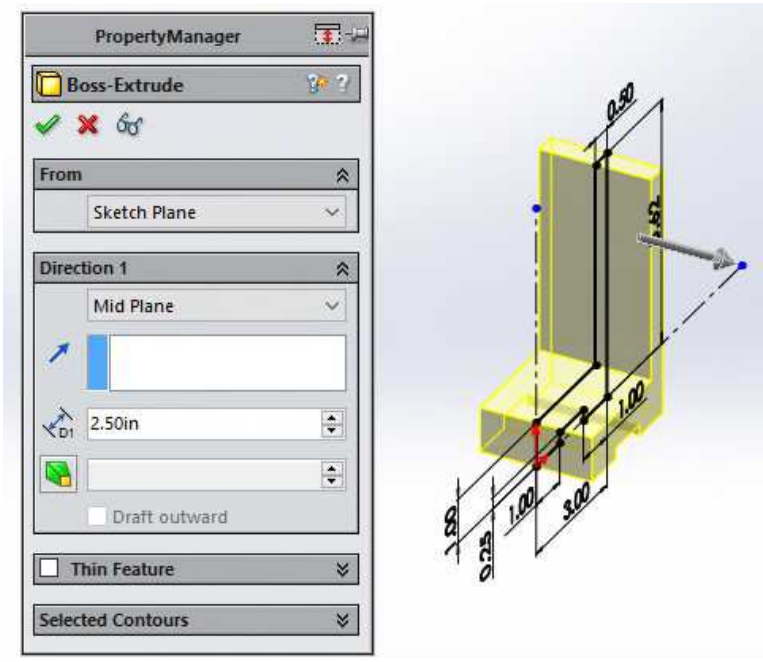

Step 2

Introduction to SolidWorks A Comprehensive Guide with Applications in 3D Printing 1st edition Onwubolu Solutions Manual

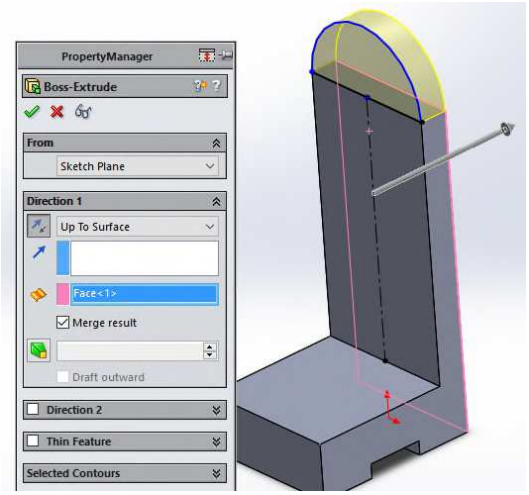

Step 3

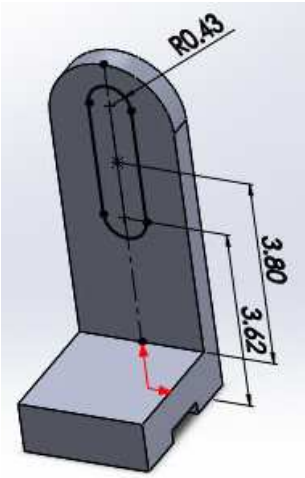

Step 4

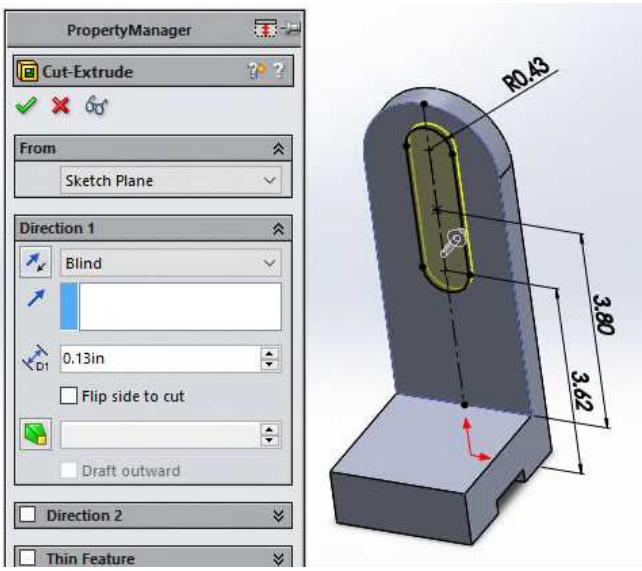

Step 5

Introduction to SolidWorks A Comprehensive Guide with Applications in 3D Printing 1st edition Onwubolu Solutions Manual

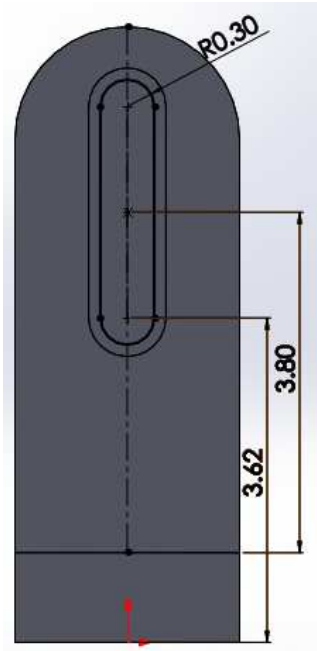

Step 6

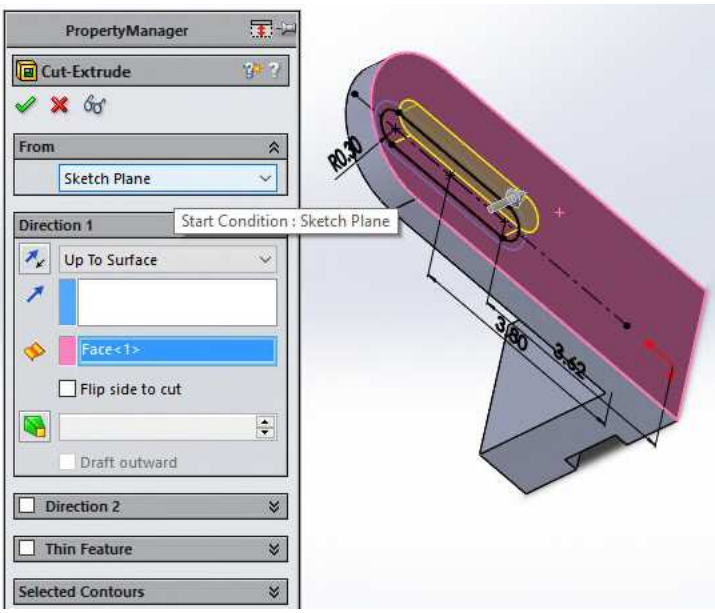

Step 7

Introduction to SolidWorks A Comprehensive Guide with Applications in 3D Printing 1st edition Onwubolu Solutions Manual

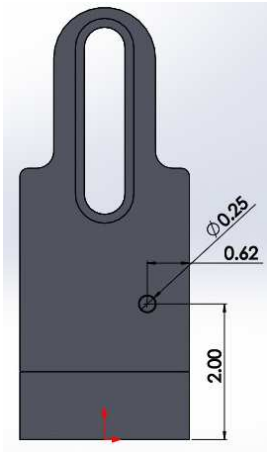

Step8

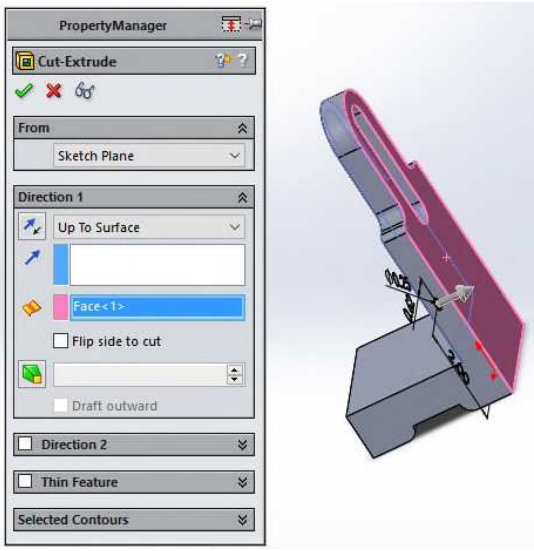

Step9

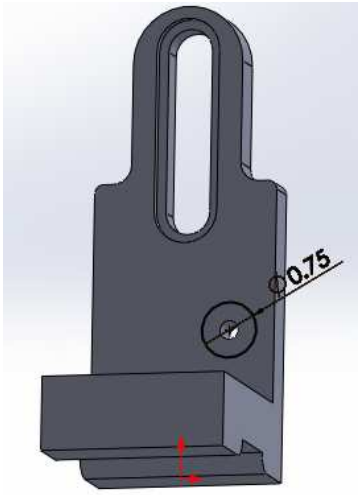

Step10

Introduction to SolidWorks A Comprehensive Guide with Applications in 3D Printing 1st edition Onwubolu Solutions Manual

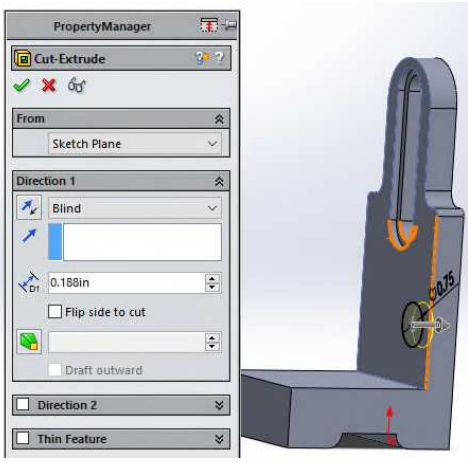

Step 11

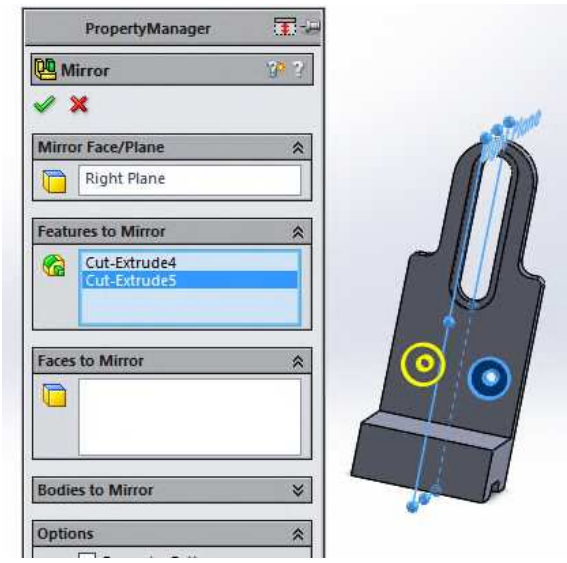

Step 12

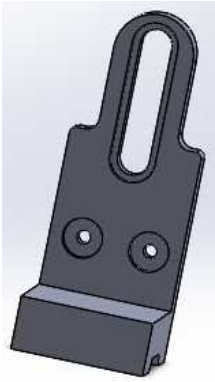

Step 13

Introduction to SolidWorks A Comprehensive Guide with Applications in 3D Printing 1st edition Onwubolu Solutions Manual

Chapter 6: Creating Revolved, Swept, and Lofted Parts

1. Problem 6-1

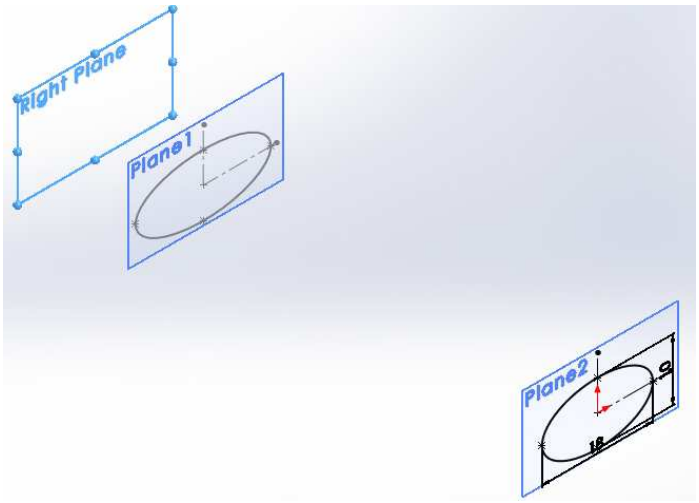

Step 1

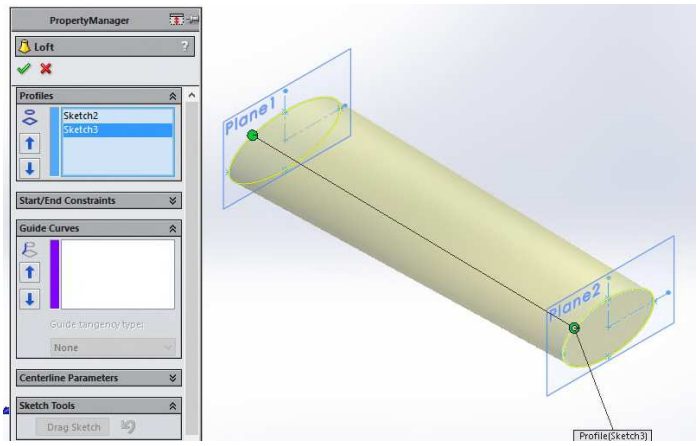

Step 2

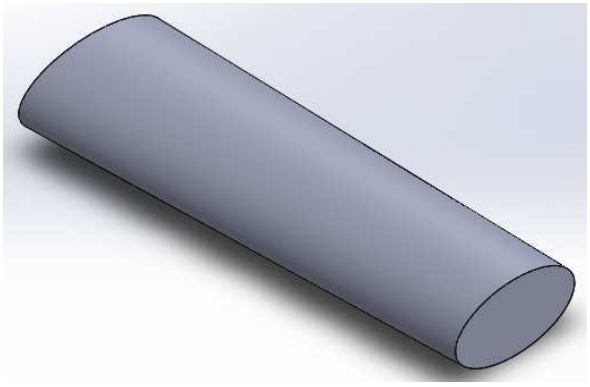

Step 3

Step4: Use Circular Pattern tool to replicate 4 times (see Figure 6-91)

Introduction to SolidWorks A Comprehensive Guide with Applications in 3D Printing 1st edition Onwubolu Solutions Manual

2. Problem 6-2

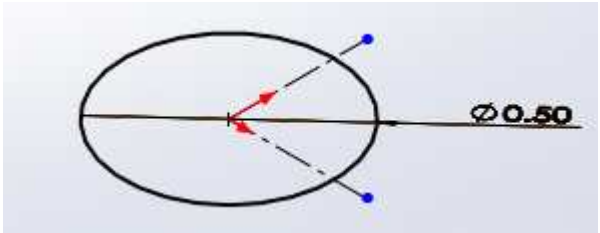

Step 1

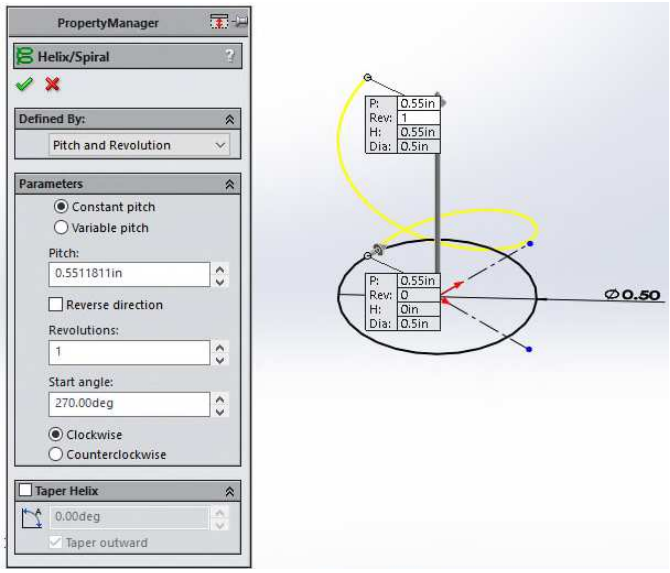

Step 2

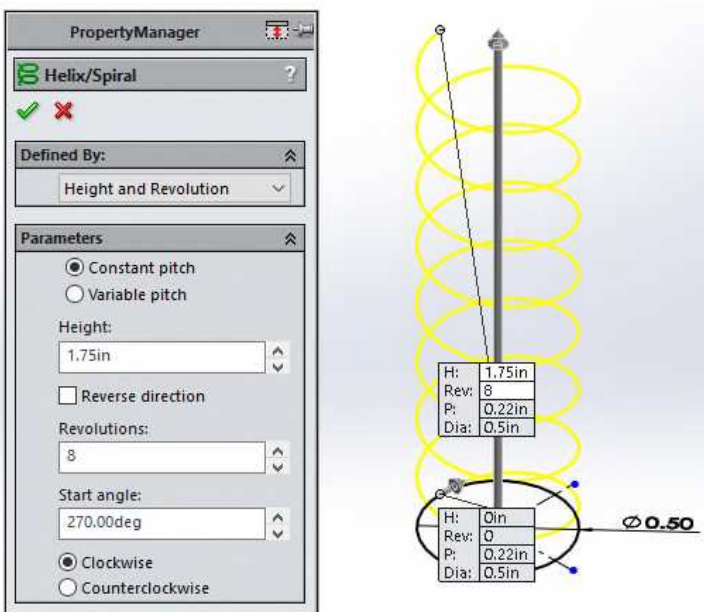

Step 3

Introduction to SolidWorks A Comprehensive Guide with Applications in 3D Printing 1st edition Onwubolu Solutions Manual

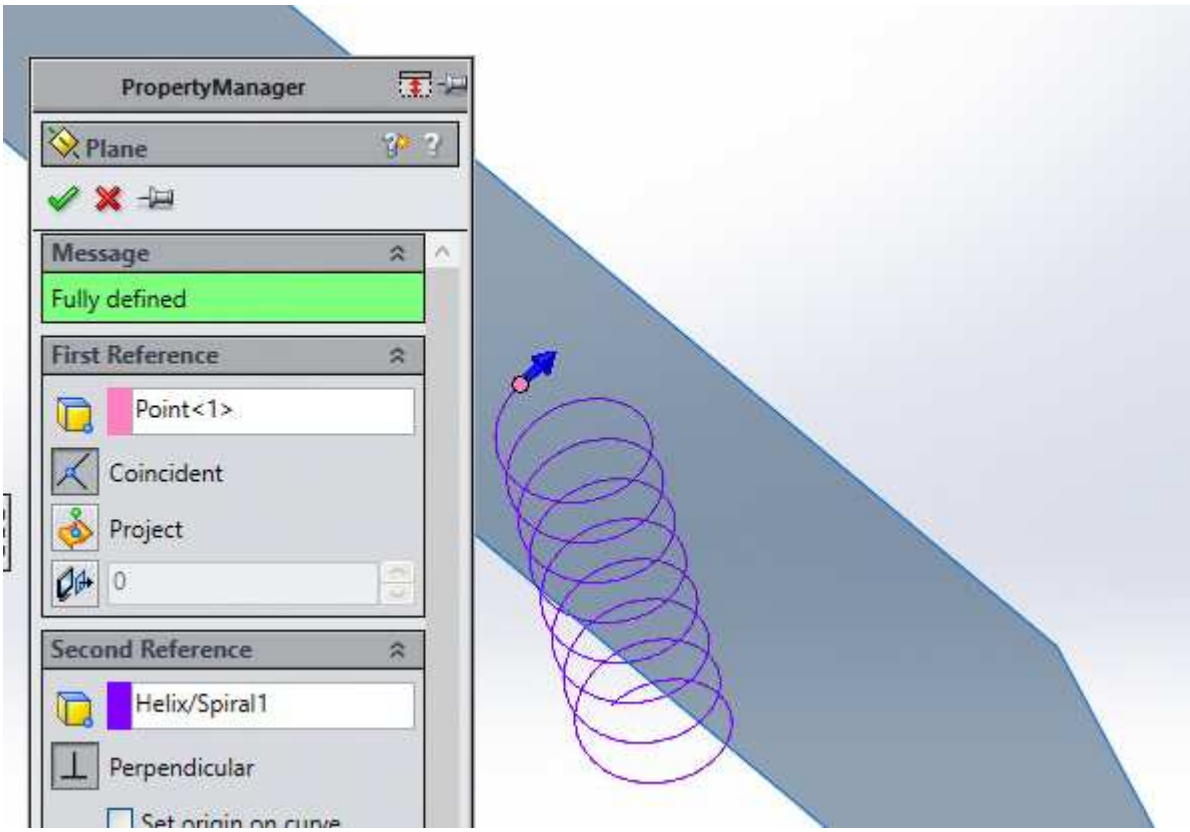

Step 4

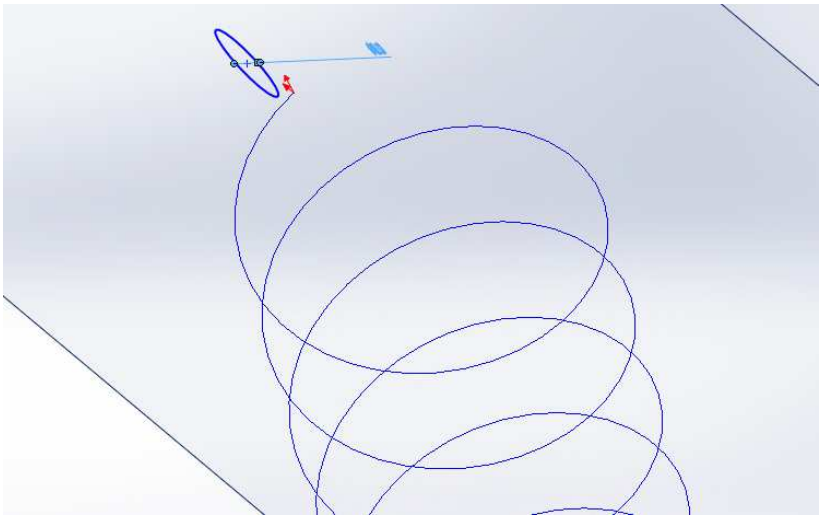

Step 5

Introduction to SolidWorks A Comprehensive Guide with Applications in 3D Printing 1st edition Onwubolu Solutions Manual

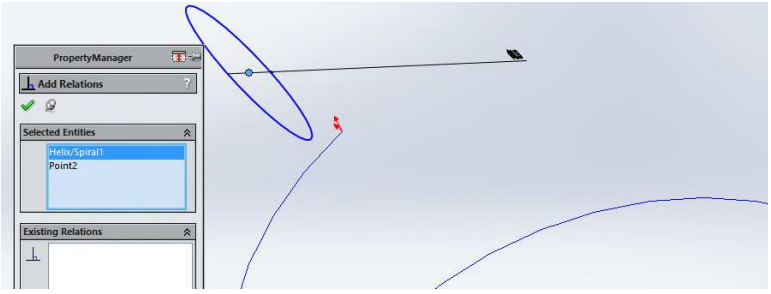

Step 6

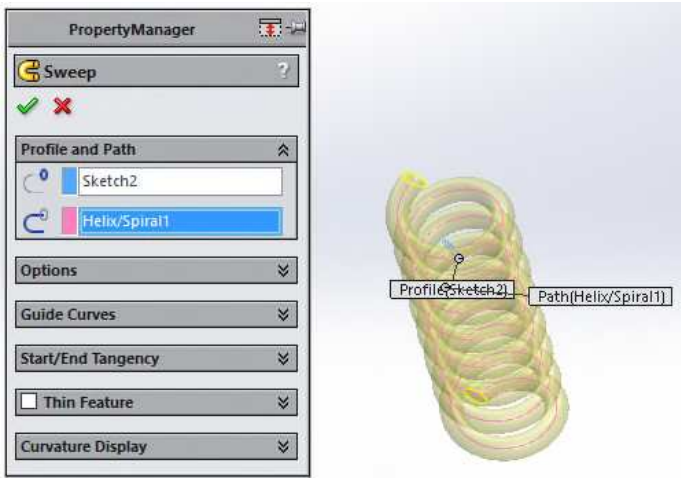

Step 7

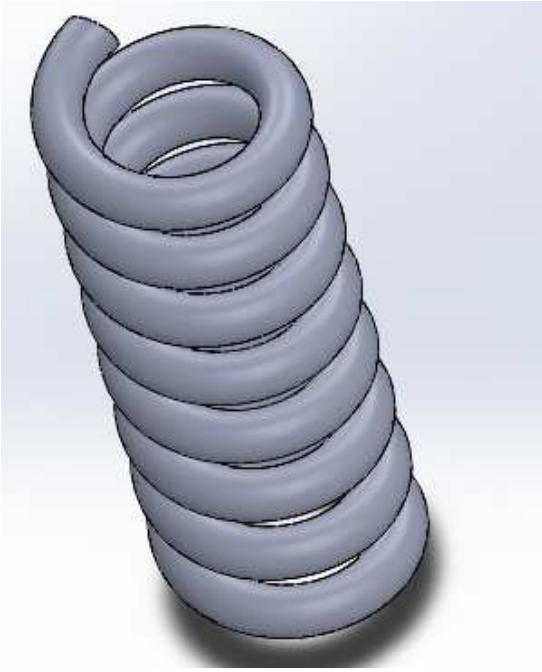

Step 8

Introduction to SolidWorks A Comprehensive Guide with Applications in 3D Printing 1st edition Onwubolu Solutions Manual

3. Problem 6-3

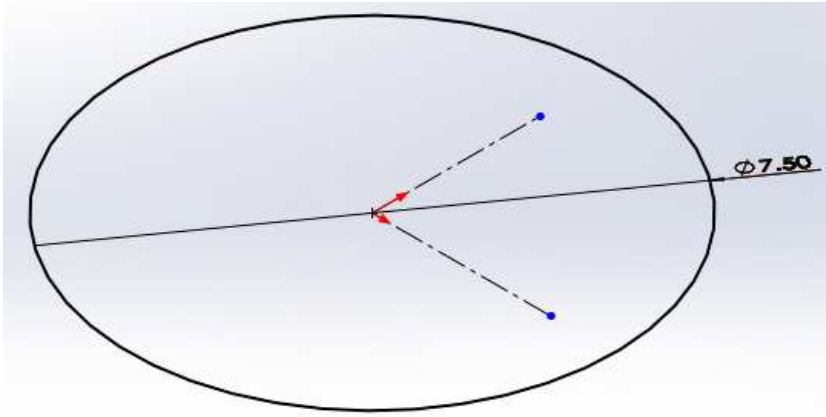

Step 1

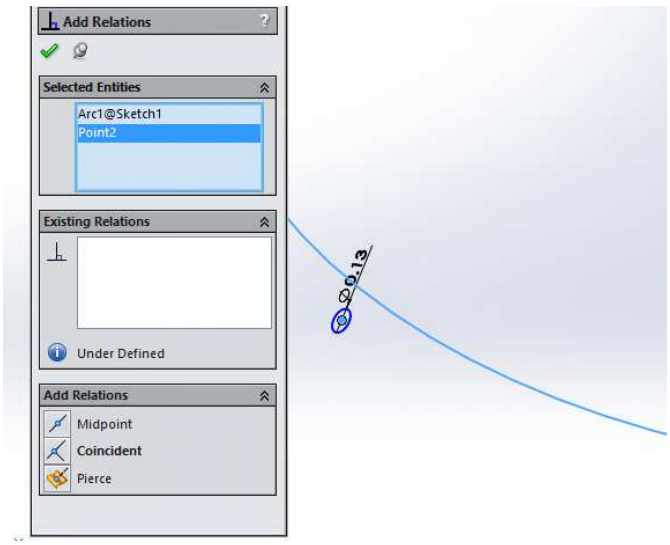

Step 2

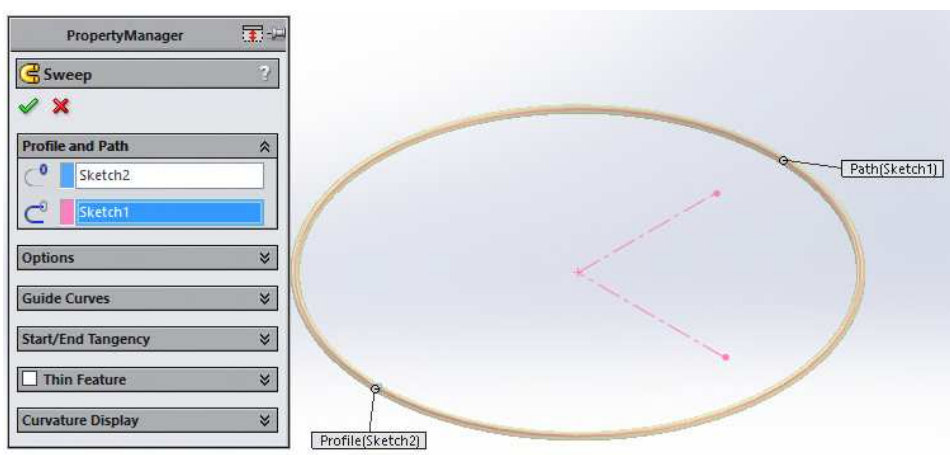

Step 3

Introduction to SolidWorks A Comprehensive Guide with Applications in 3D Printing 1st edition Onwubolu Solutions Manual

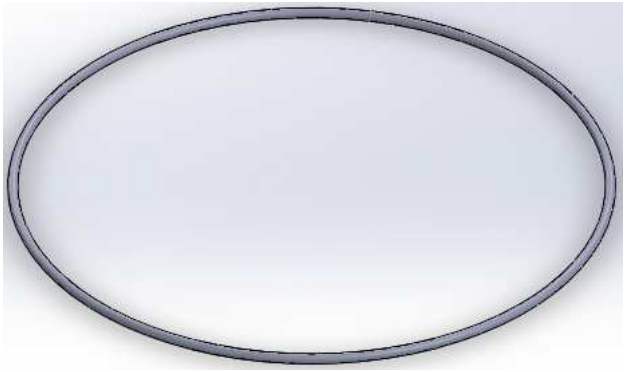

Step 4

4. Problem 6-4

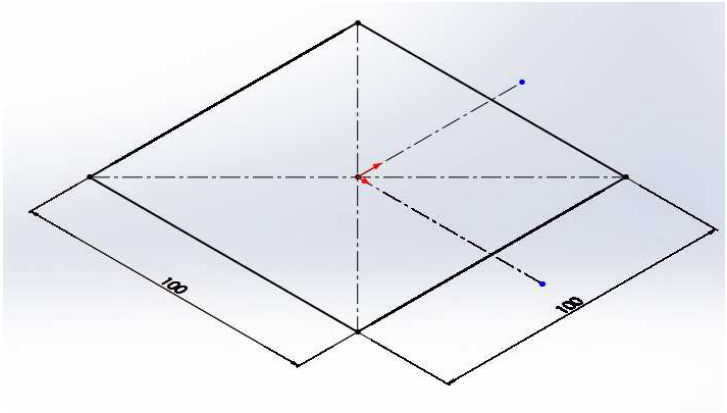

Step 1

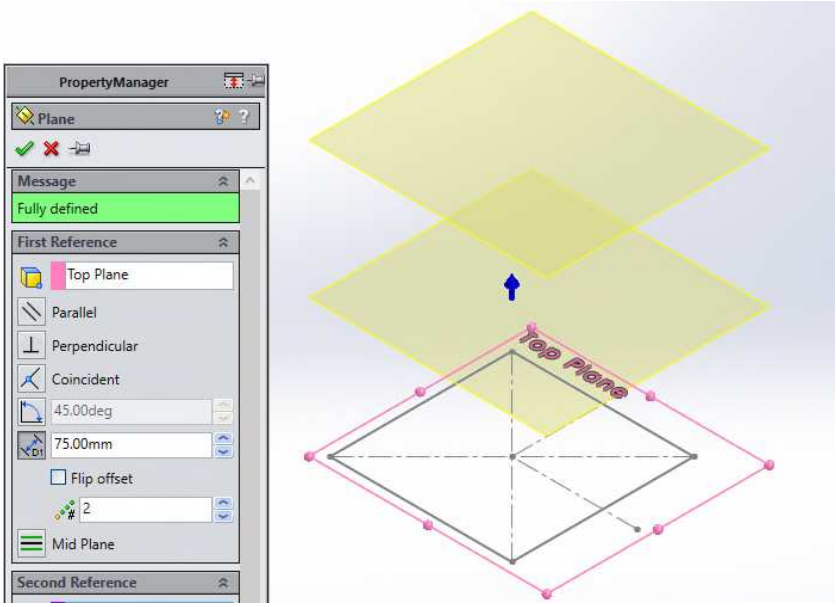

Step 2

Introduction to SolidWorks A Comprehensive Guide with Applications in 3D Printing 1st edition Onwubolu Solutions Manual

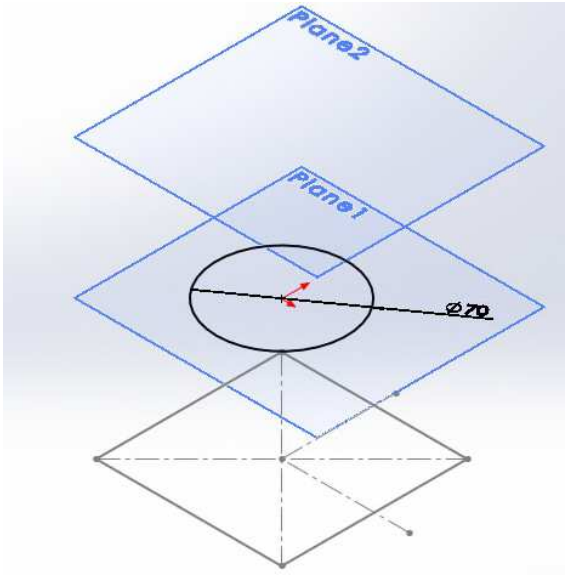

Step 3

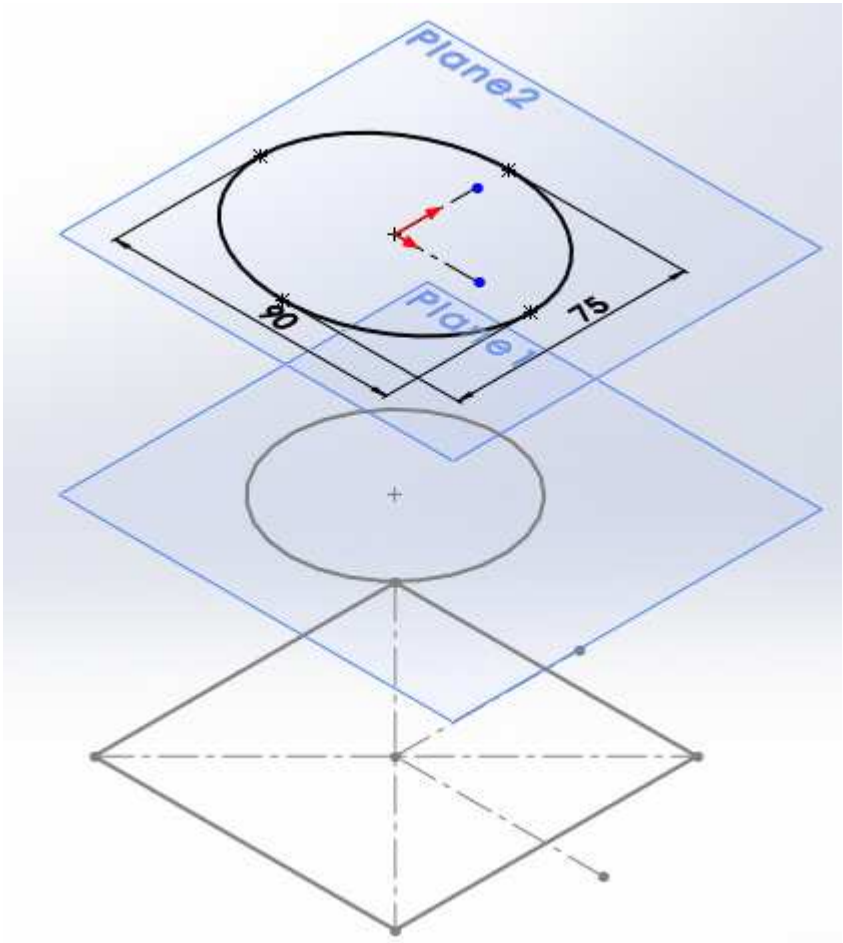

Step 4

Introduction to SolidWorks A Comprehensive Guide with Applications in 3D Printing 1st edition Onwubolu Solutions Manual

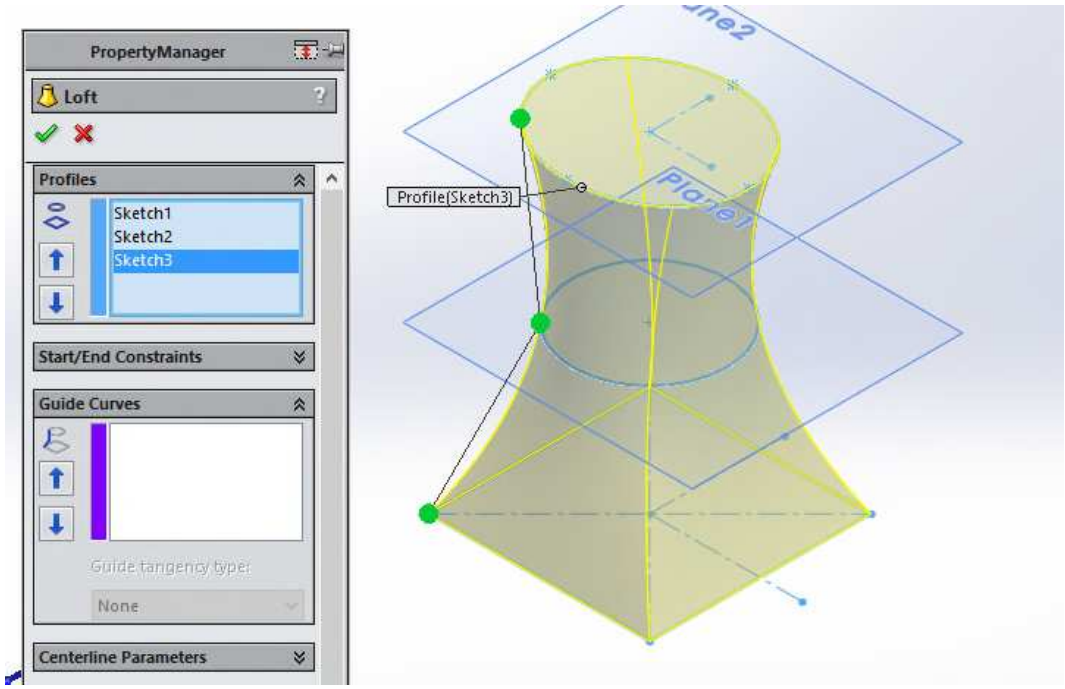

Step 5

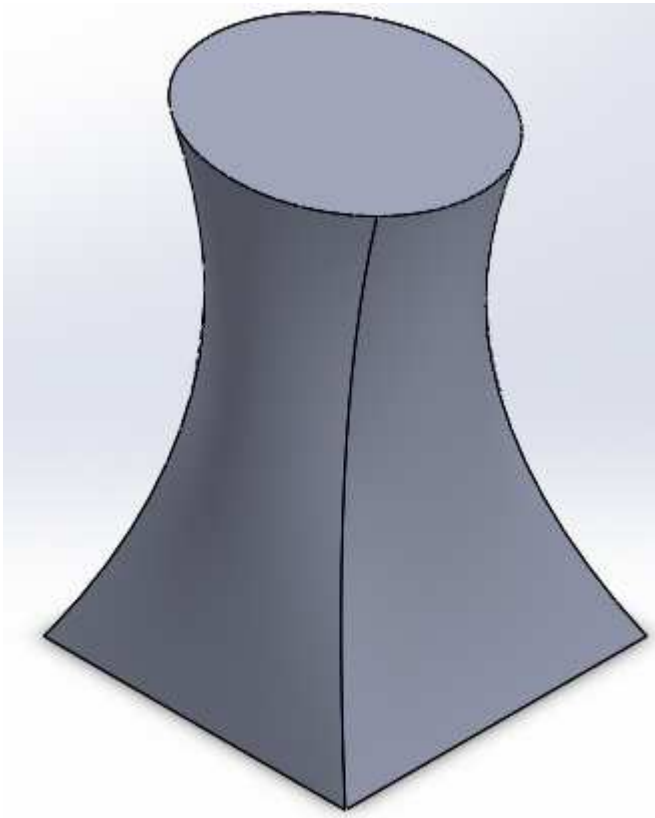

Step 6

Introduction to SolidWorks A Comprehensive Guide with Applications in 3D Printing 1st edition Onwubolu Solutions Manual

Chapter 7: Part Modeling with Equation Driven Curves

1. Problem 7-1

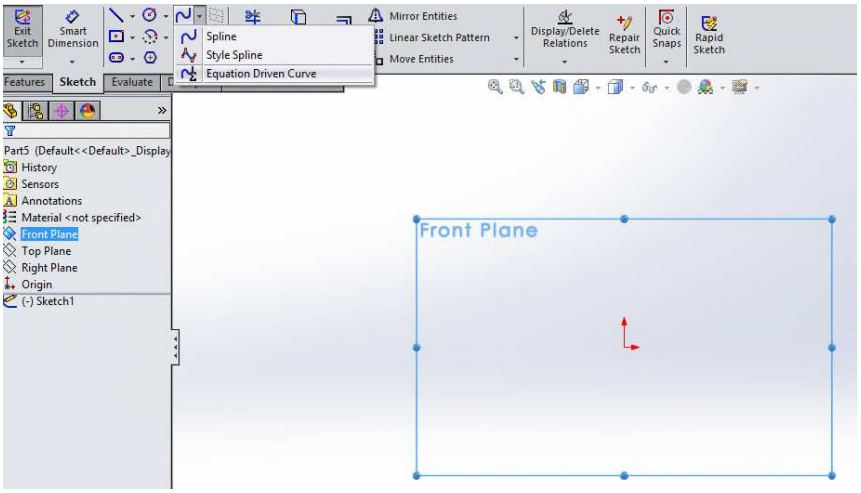

Step 1

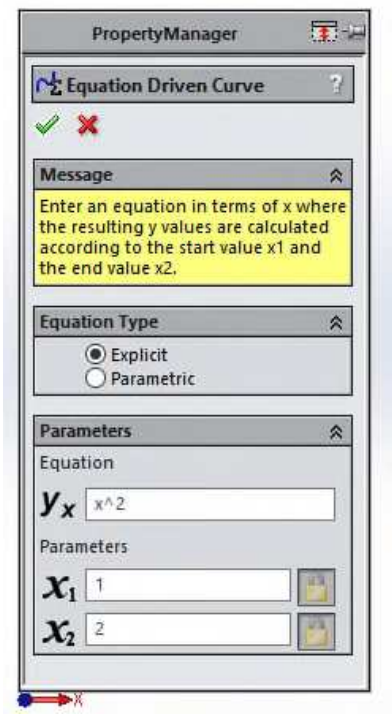

Step 2

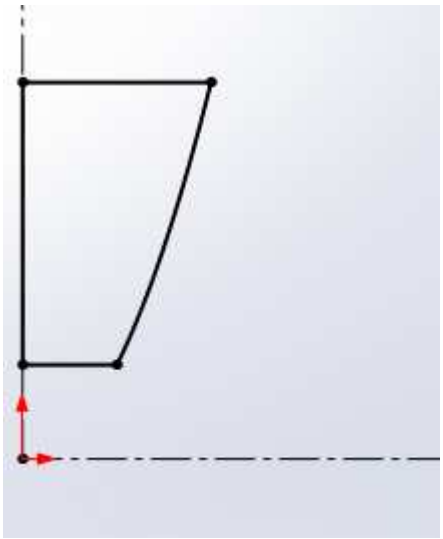

Step 3

Introduction to SolidWorks A Comprehensive Guide with Applications in 3D Printing 1st edition Onwubolu Solutions Manual

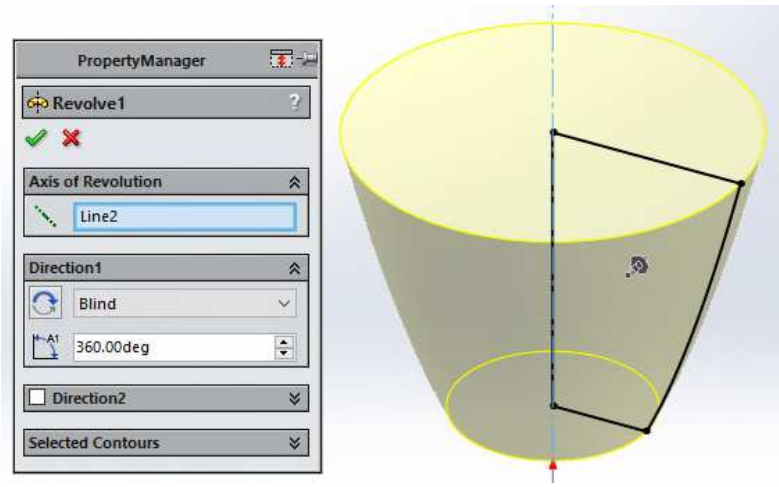

Step 4

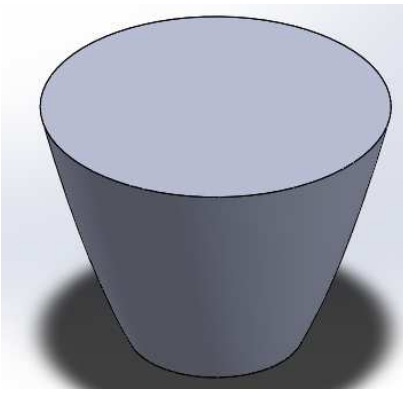

Step 5

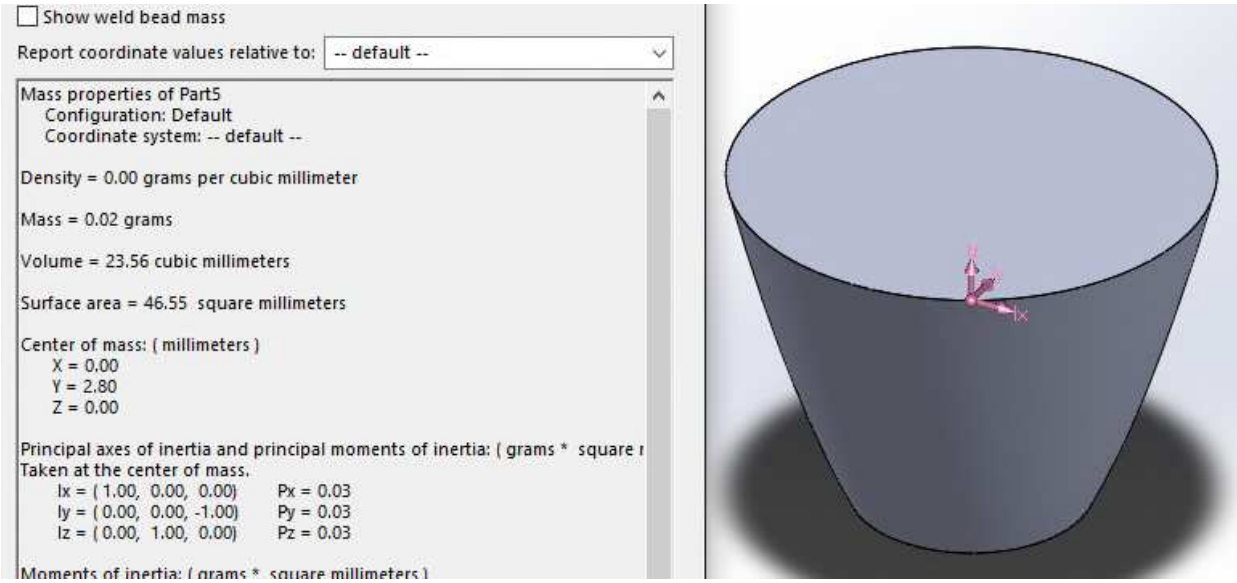

Step 6

Introduction to SolidWorks A Comprehensive Guide with Applications in 3D Printing 1st edition Onwubolu Solutions Manual

2. Problem 7-2

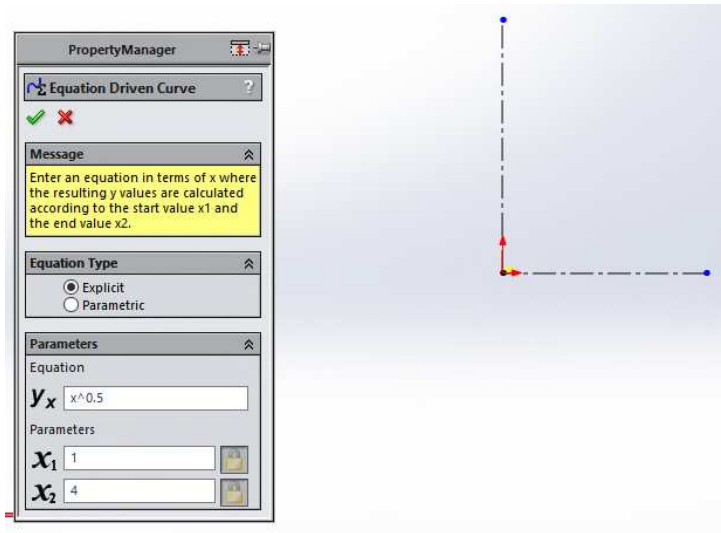

Step 1

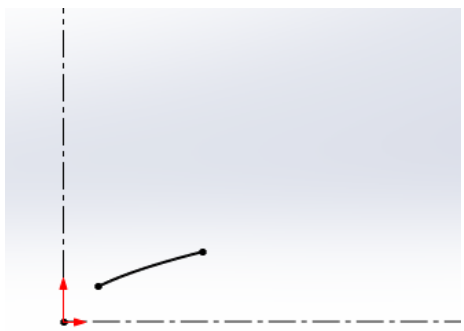

Step 2

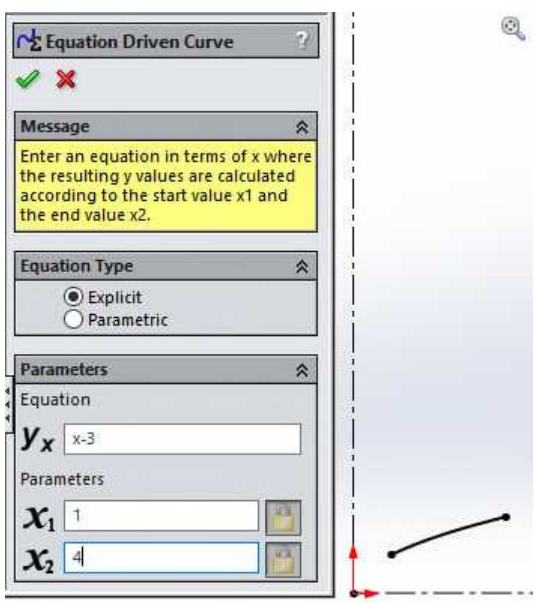

Step 3

Introduction to SolidWorks A Comprehensive Guide with Applications in 3D Printing 1st edition Onwubolu Solutions Manual

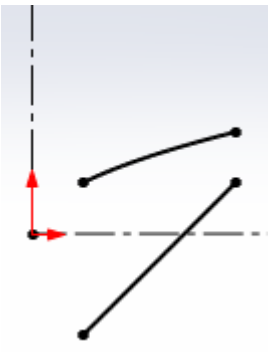

Step 4

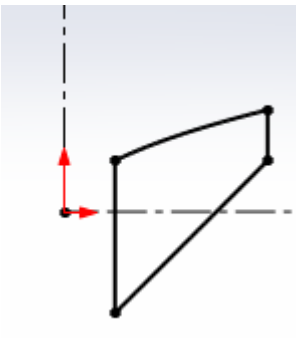

Step 5

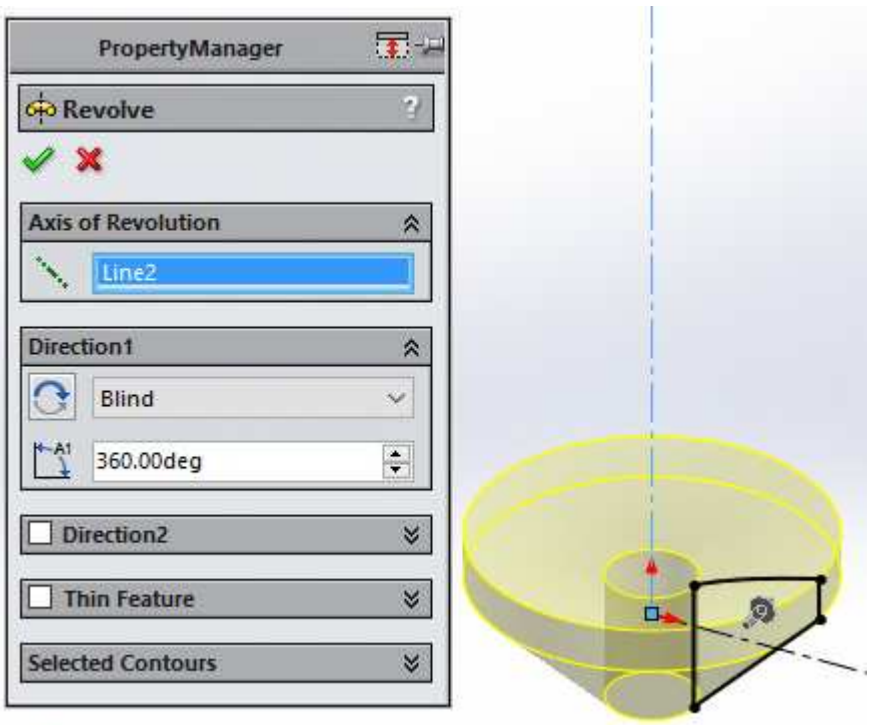

Step 6

Introduction to SolidWorks A Comprehensive Guide with Applications in 3D Printing 1st edition Onwubolu Solutions Manual

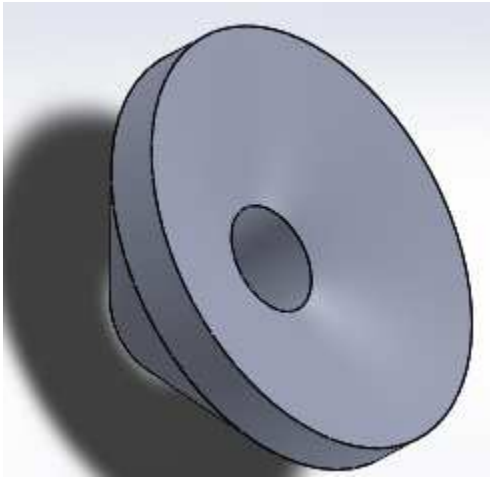

Step 7

3. Problem 7-3

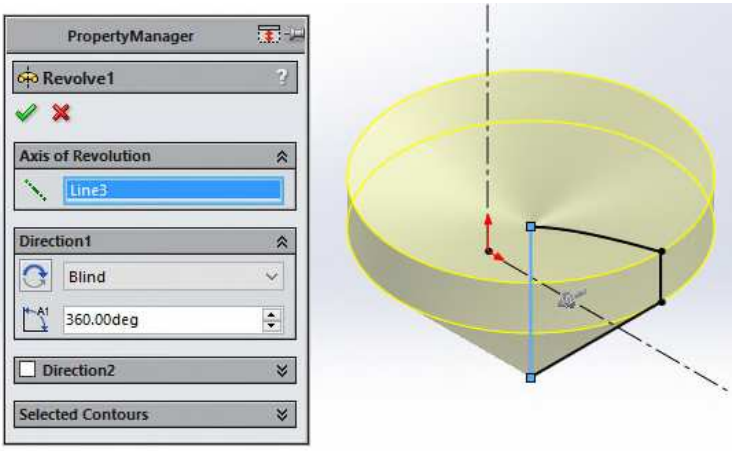

Step 1

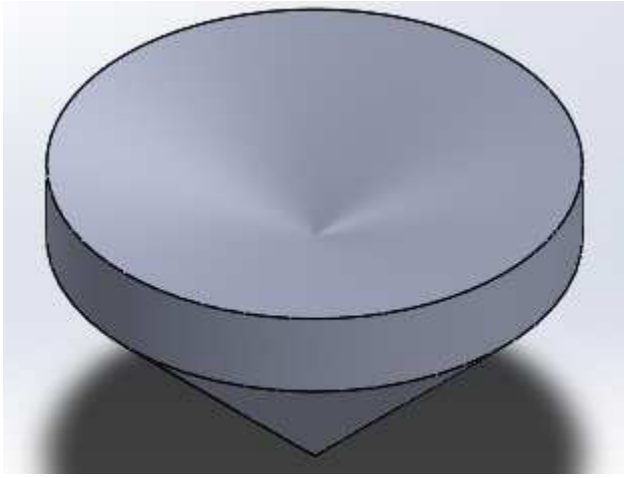

Step 2

Introduction to SolidWorks A Comprehensive Guide with Applications in 3D Printing 1st edition Onwubolu Solutions Manual

4. Problem 7-4

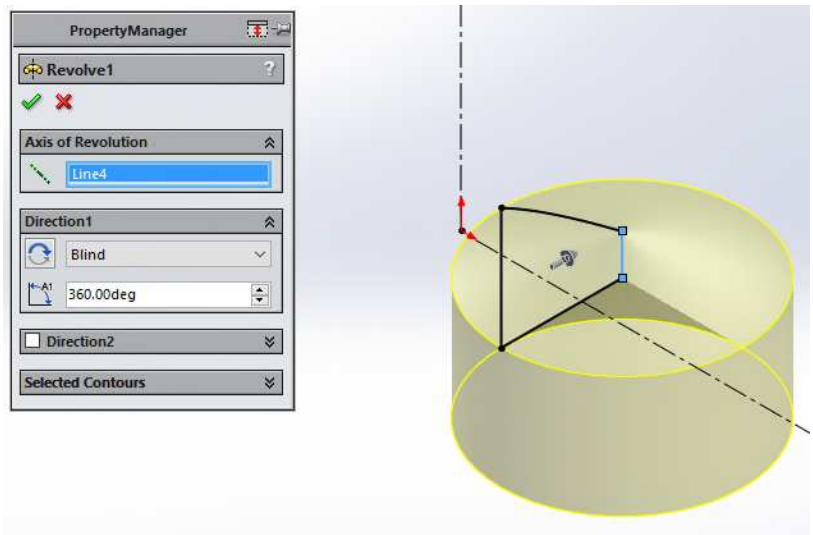

Step 1

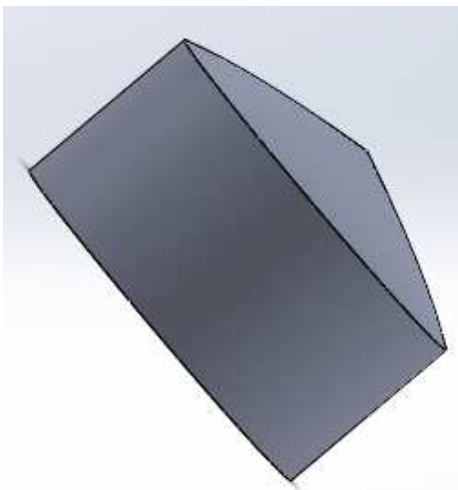

Step 2

5. Problem 7-5

Question 2
Volume = 87.36 cubic millimeters
Surface area = 160.04 square millimeters

Question 3
Volume = 48.60 cubic millimeters
Surface area = 88.35 square millimeters

Question 4
Volume = 67.64 cubic millimeters
Surface area = 126.73 square millimeters

Introduction to SolidWorks A Comprehensive Guide with Applications in 3D Printing 1st edition Onwubolu Solutions Manual

Chapter 9: Part and Assembly Drawings—CSWA Preparations

1. Problem 9-1

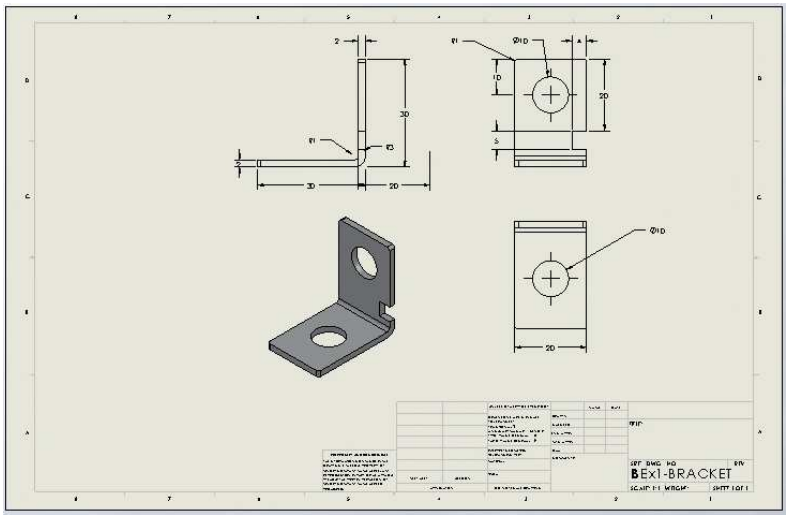

2. Problem 9-2

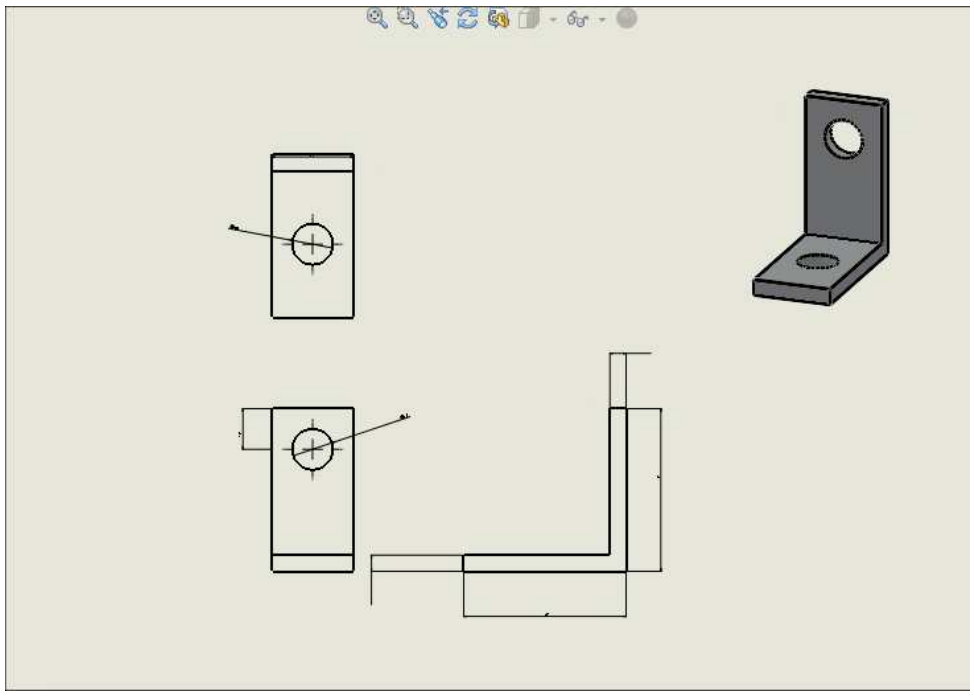

3. Problem 9-3

The views are all shown in the chapter.

Introduction to SolidWorks A Comprehensive Guide with Applications in 3D Printing 1st edition Onwubolu Solutions Manual

4. Project P1

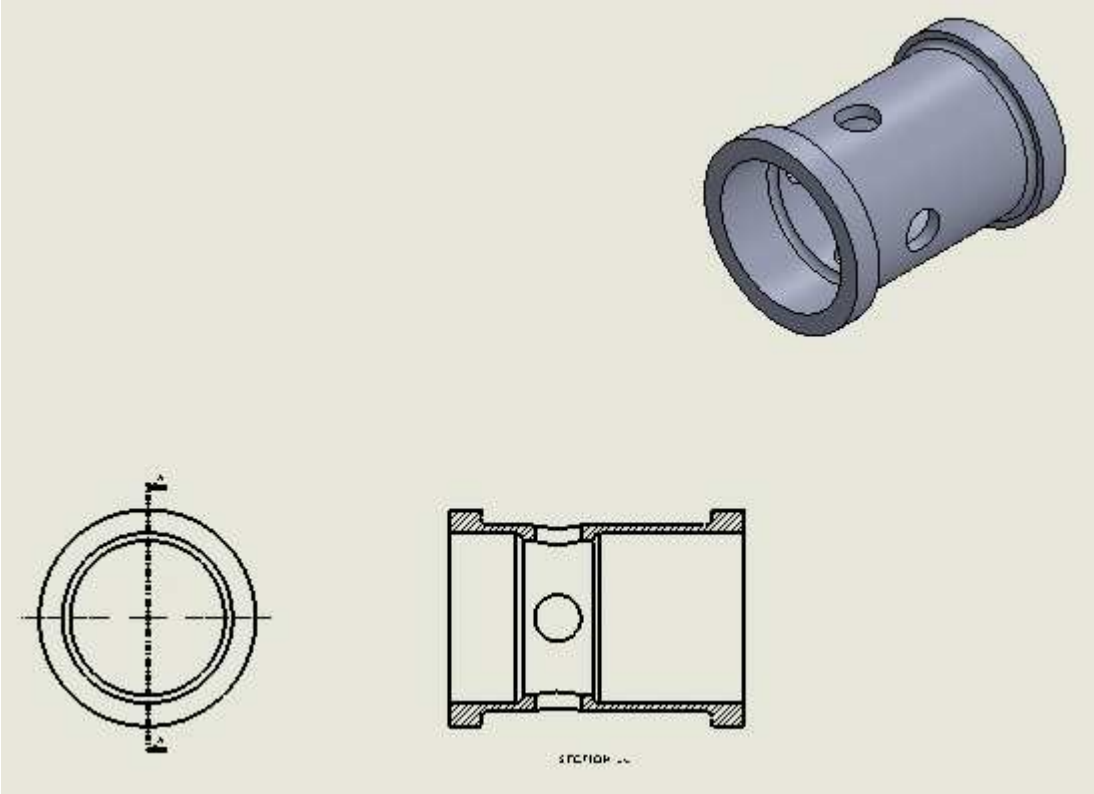

5. Project P2

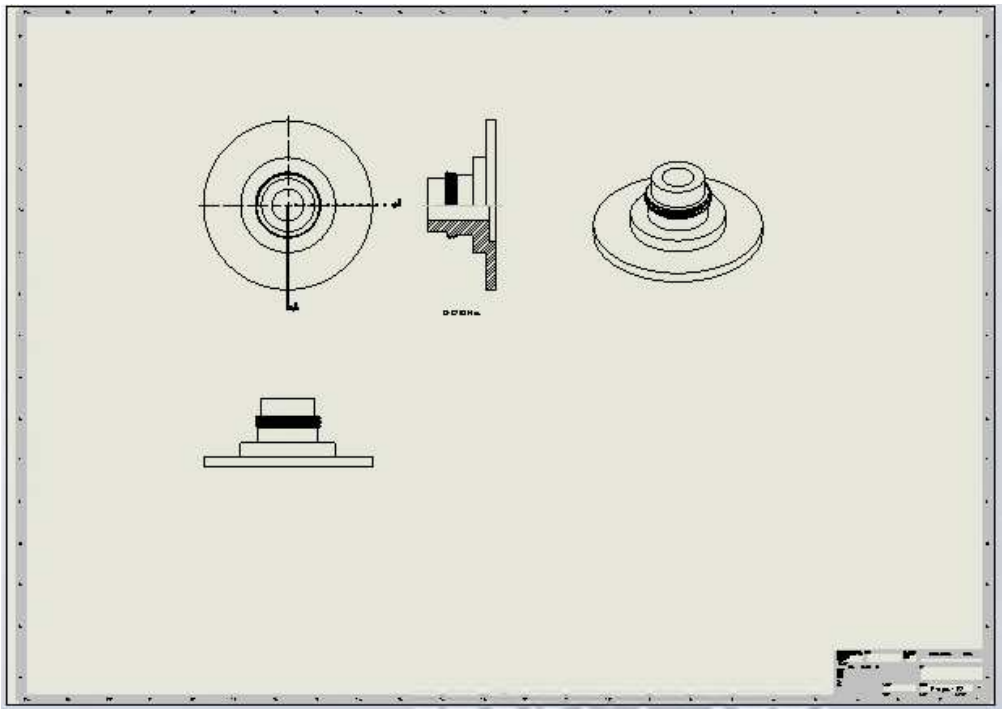

Introduction to SolidWorks A Comprehensive Guide with Applications in 3D Printing 1st edition Onwubolu Solutions Manual

6. Project P3

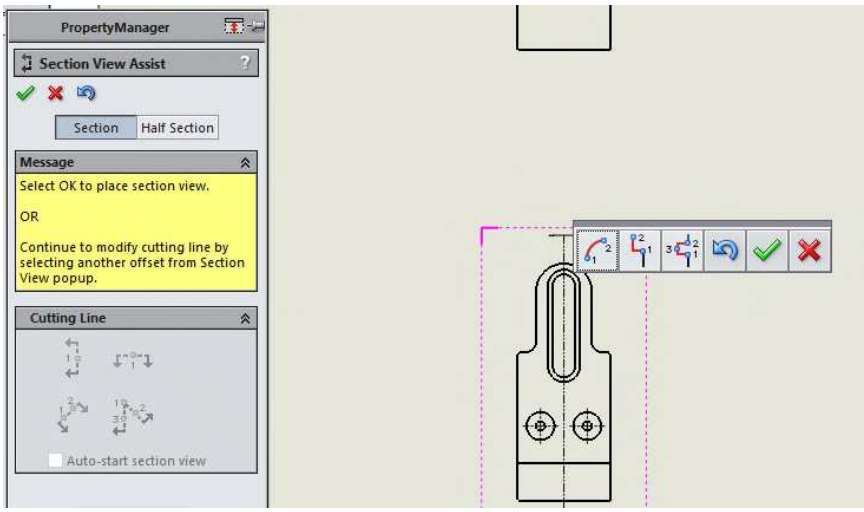

Step 1

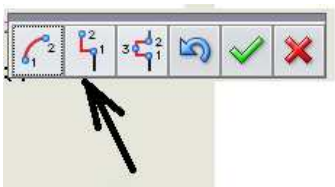

Step 2: Select the option pointed to, and click center of left circle(s)

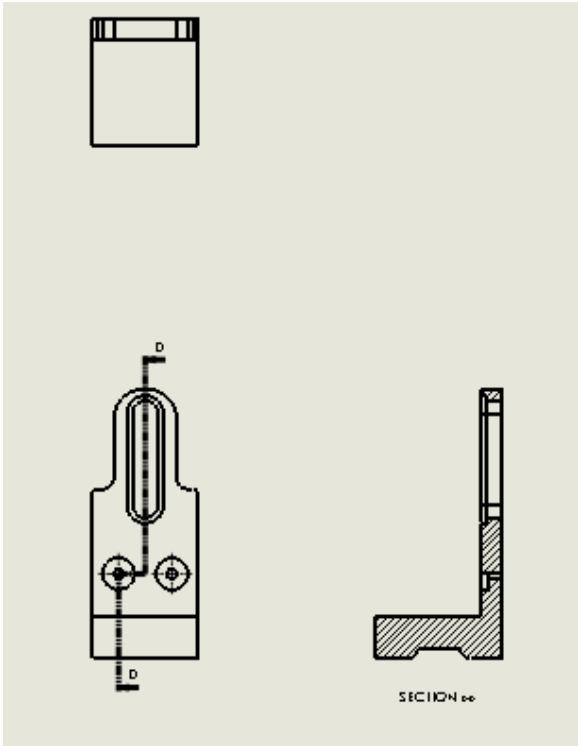

Step 3

Introduction to SolidWorks A Comprehensive Guide with Applications in 3D Printing 1st edition Onwubolu Solutions Manual

Chapter 11: Top-Down Design

1. **Problem 11-1**

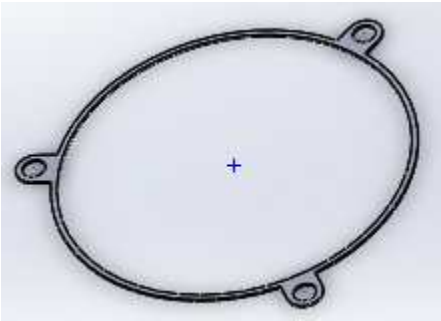

Shape follows the solution given

2. **Problem 11-2**

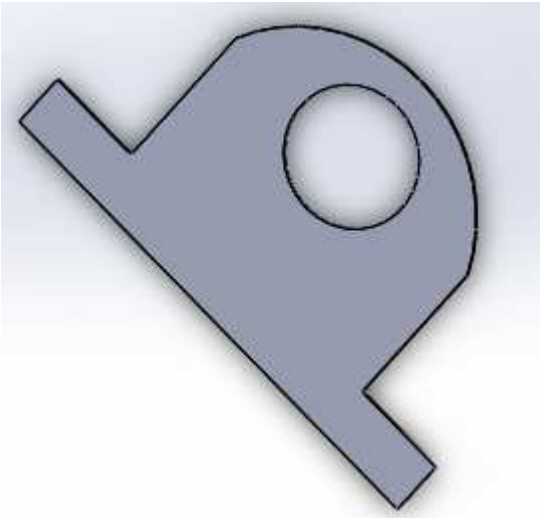

Shape follows the solution given

Introduction to SolidWorks A Comprehensive Guide with Applications in 3D Printing 1st edition Onwubolu Solutions Manual

Chapter 12: Surface Modeling

1. Problem 12-1

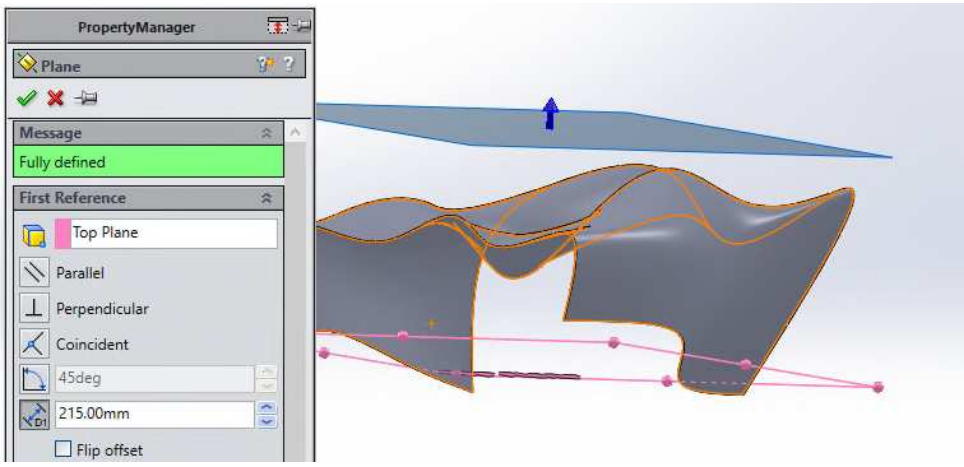

Step 1

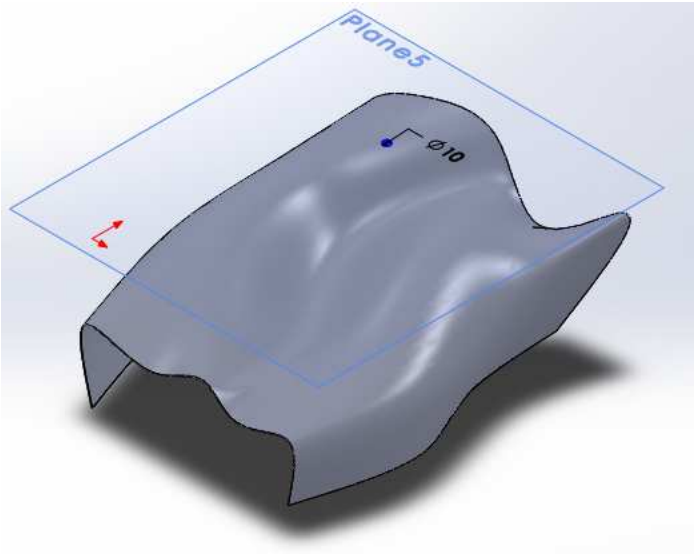

Step 2

Introduction to SolidWorks A Comprehensive Guide with Applications in 3D Printing 1st edition Onwubolu Solutions Manual

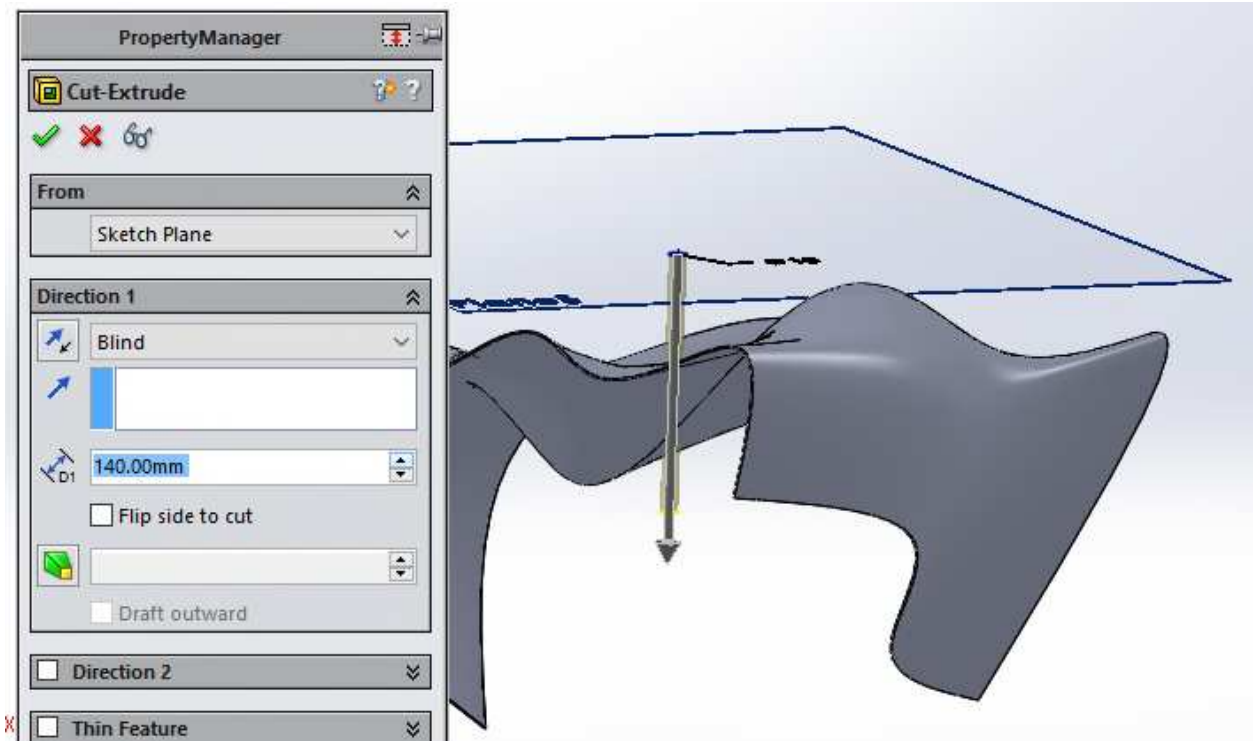

Step 3

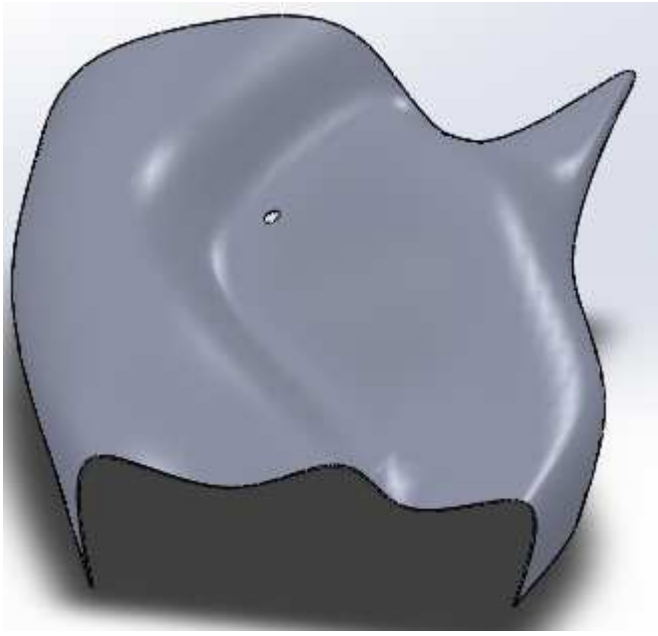

Step 4

Introduction to SolidWorks A Comprehensive Guide with Applications in 3D Printing 1st edition Onwubolu Solutions Manual

2. Problem 12-2

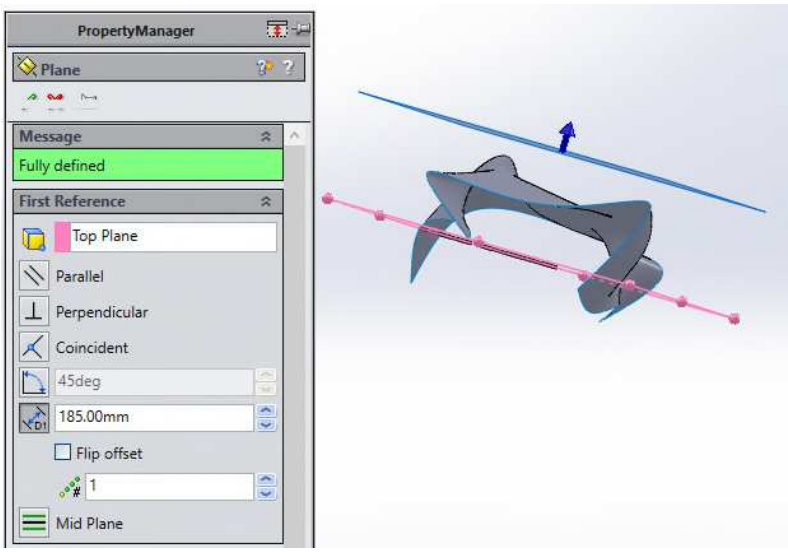

Step 1

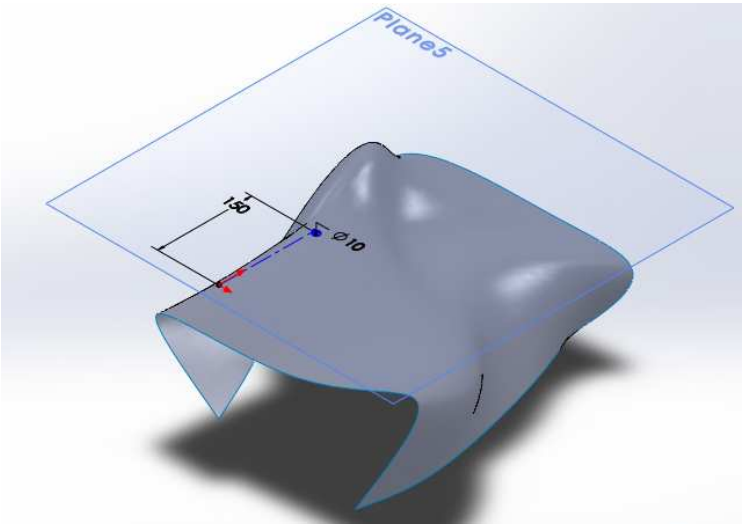

Step 2

Introduction to SolidWorks A Comprehensive Guide with Applications in 3D Printing 1st edition Onwubolu Solutions Manual

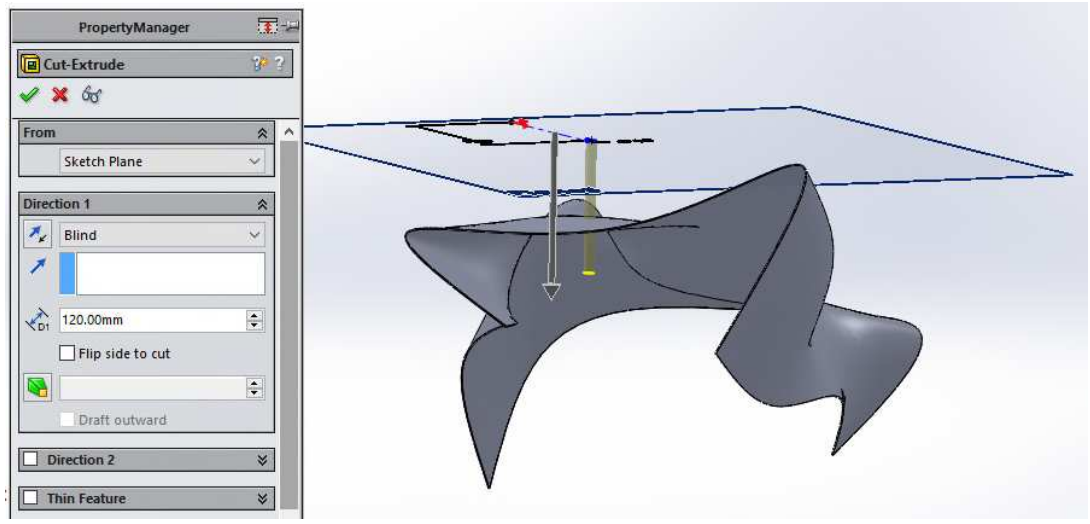

Step 3

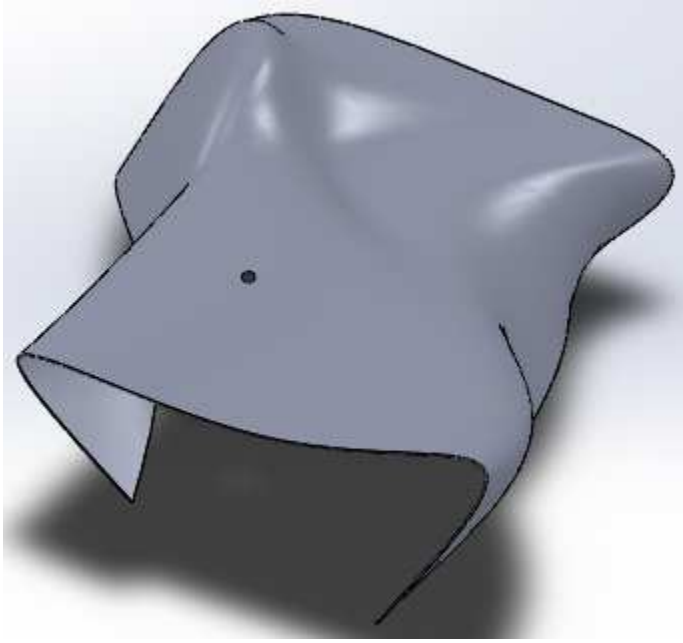

Step 4

3. Problem 12-3

Used for patching surfaces

Introduction to SolidWorks A Comprehensive Guide with Applications in 3D Printing 1st edition Onwubolu Solutions Manual

Chapter 13: Tool Boxes and Design Libraries

Projects 1—6 are to be carried out as projects based on the content of chapter 13

Chapter 15: Tool Boxes and Design Libraries

Projects 1—6 are to be carried out as projects based on the content of chapter 13

1. **Problem 15-1**

   Basic motion uses motors, springs, 3D contacts, and gravity (Physical Simulation); it does not use frames. Motion analysis is and Add-In to SolidWorks and it is the highest level of motion study.

2. **Problem 15-2**
   No

3. **Problem 15-3**
   No

Introduction to SolidWorks A Comprehensive Guide with Applications in 3D Printing 1st edition Onwubolu Solutions Manual

Chapter 16: Rendering

1. Problem 16-1

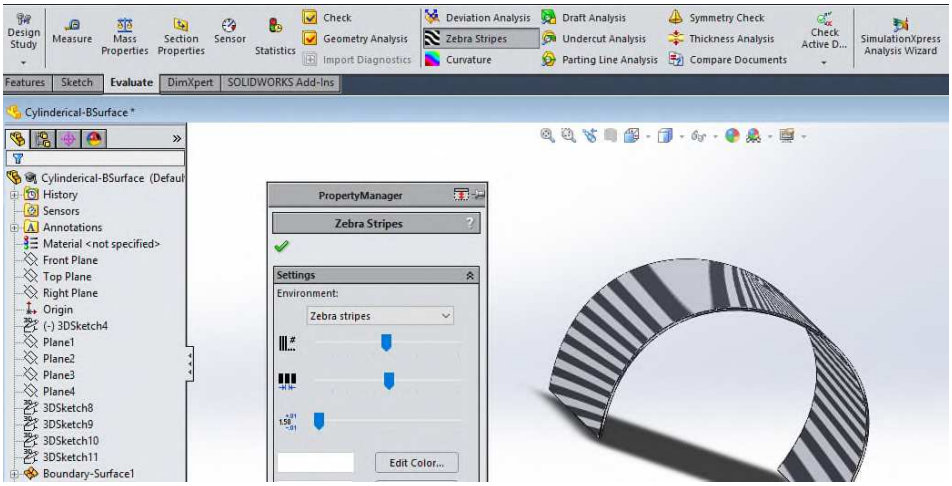

2. Problem 16-2

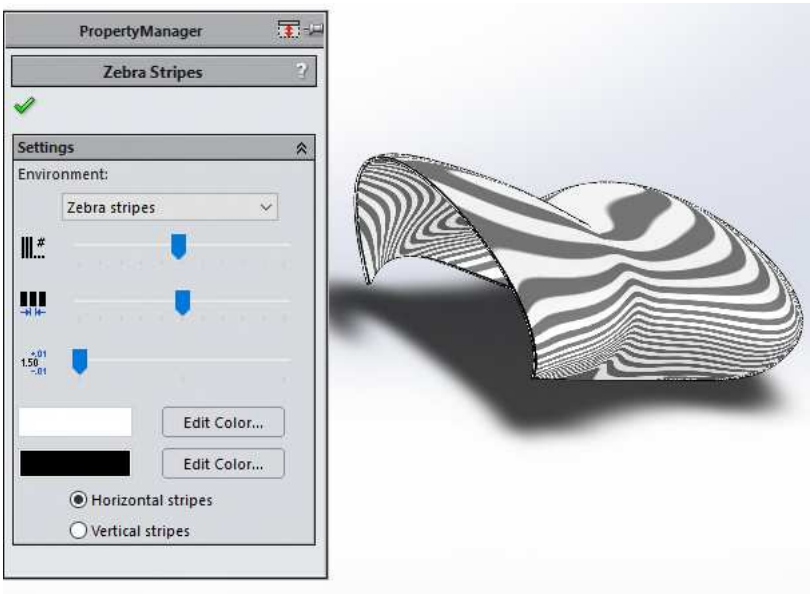

3. Problem 16-3

Introduction to SolidWorks A Comprehensive Guide with Applications in 3D Printing 1st edition Onwubolu Solutions Manual

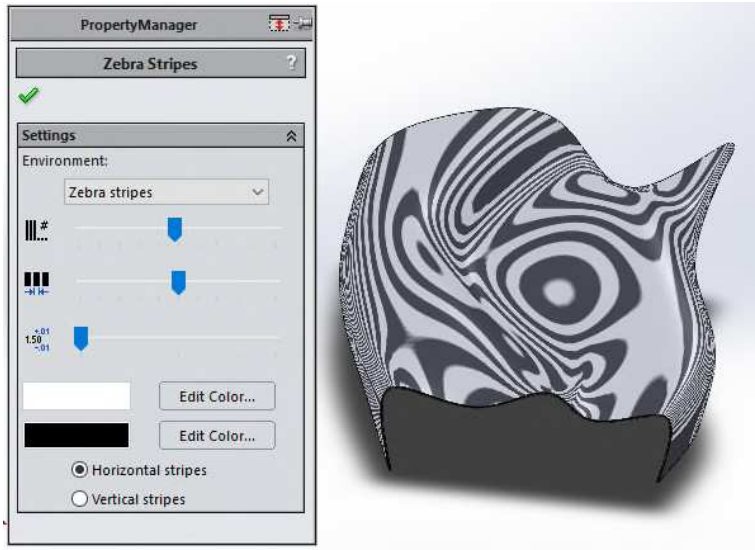

Introduction to SolidWorks A Comprehensive Guide with Applications in 3D Printing 1st edition Onwubolu Solutions Manual

Chapter 17: Mold Design

1. **Problem 17-1**

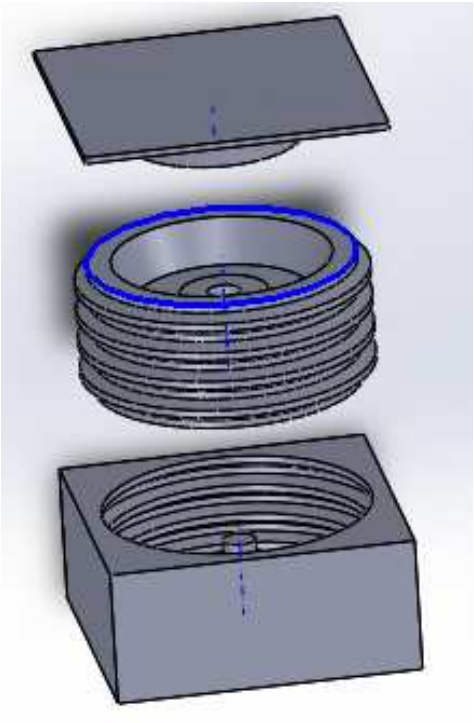

2. **Problem 17-2**

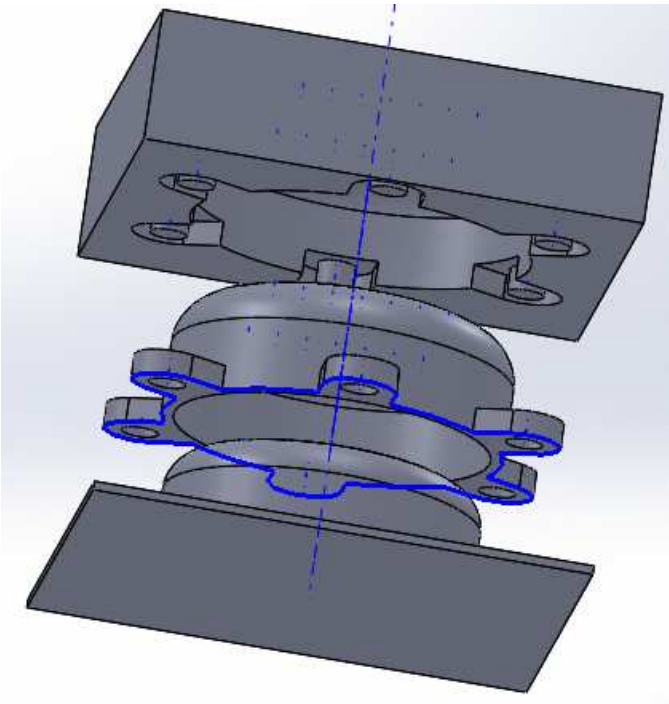

Introduction to SolidWorks A Comprehensive Guide with Applications in 3D Printing 1st edition Onwubolu Solutions Manual

3. **Problem 17-3**

4. **Problem 17-4**

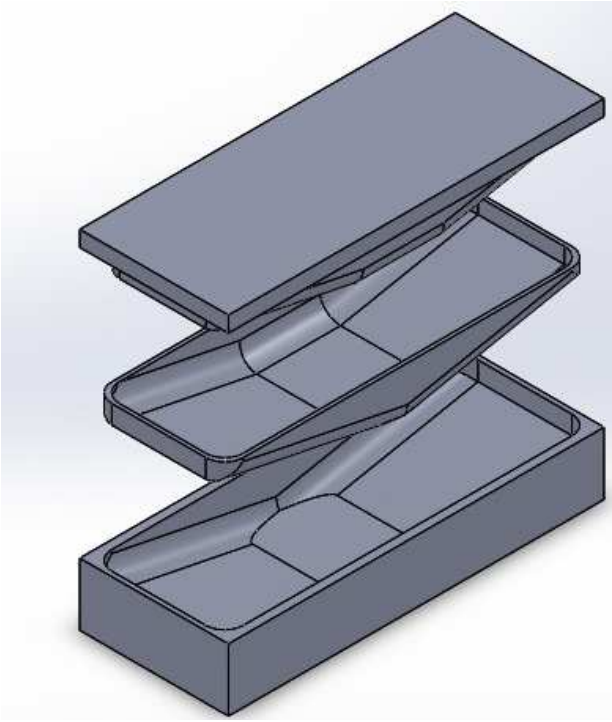

Introduction to SolidWorks A Comprehensive Guide with Applications in 3D Printing 1st edition Onwubolu Solutions Manual

Chapter 18: Sheet Metal Parts—I

1. **Problem 18-1**

   Repeat problem

2. **Problem 18-2**

   Repeat problem

3. **Problem 18-3**

   Repeat problem

Chapter 19: Sheet Metal Parts—II

1. **Problem 19-1**

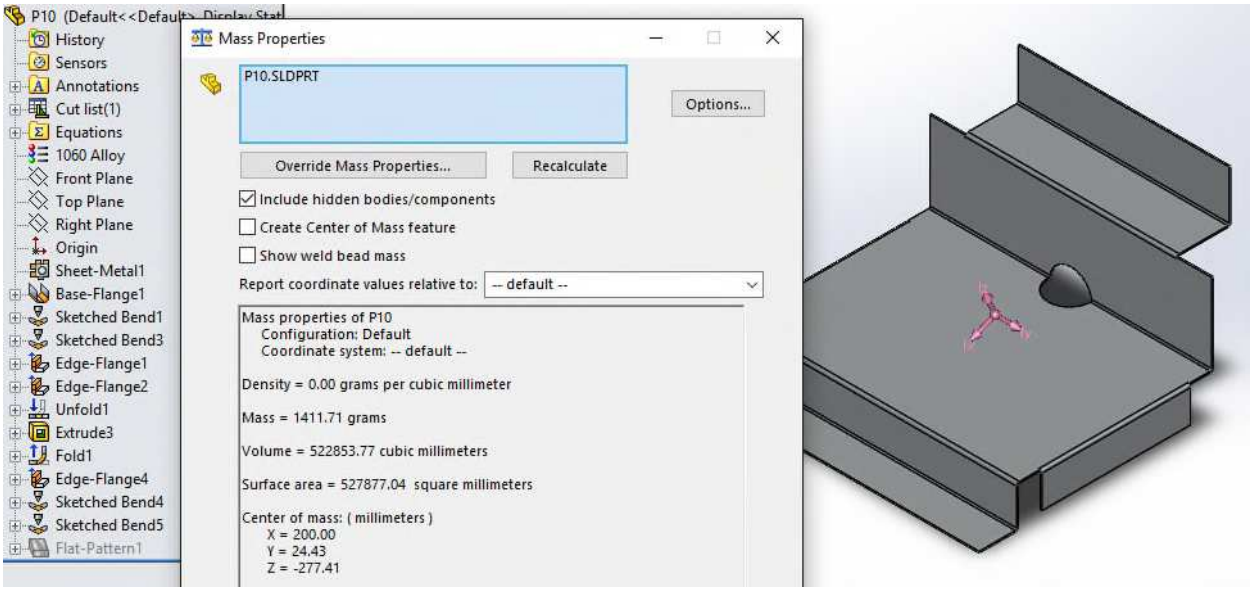

Introduction to SolidWorks A Comprehensive Guide with Applications in 3D Printing 1st edition Onwubolu Solutions Manual

2. Problem 19-2

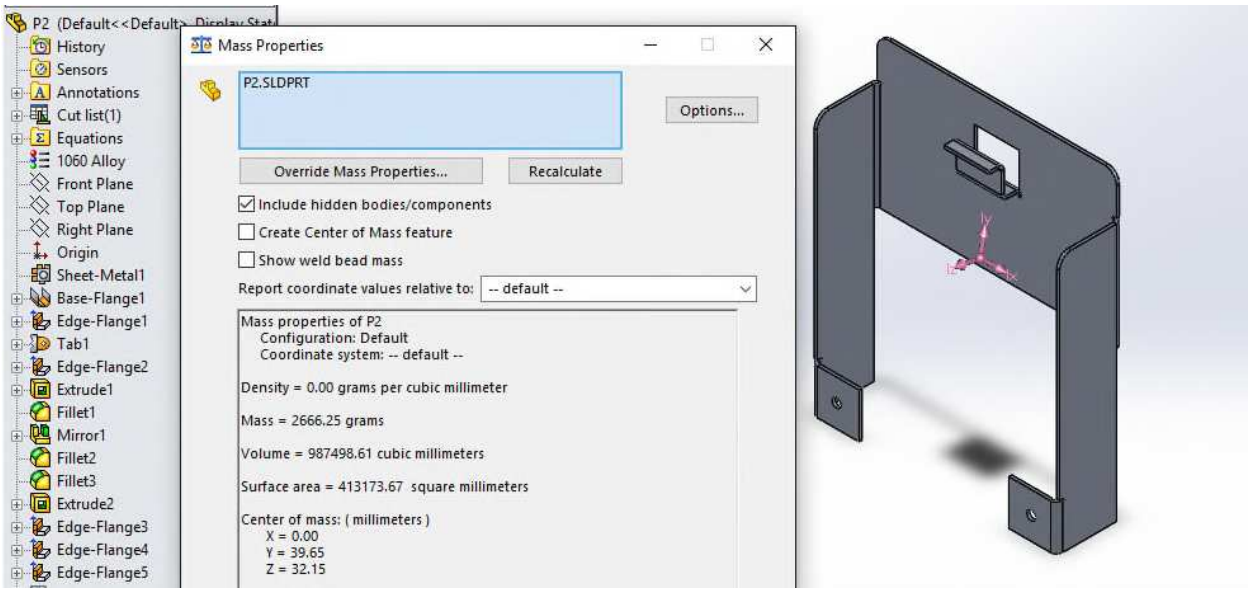

3. Problem 19-3

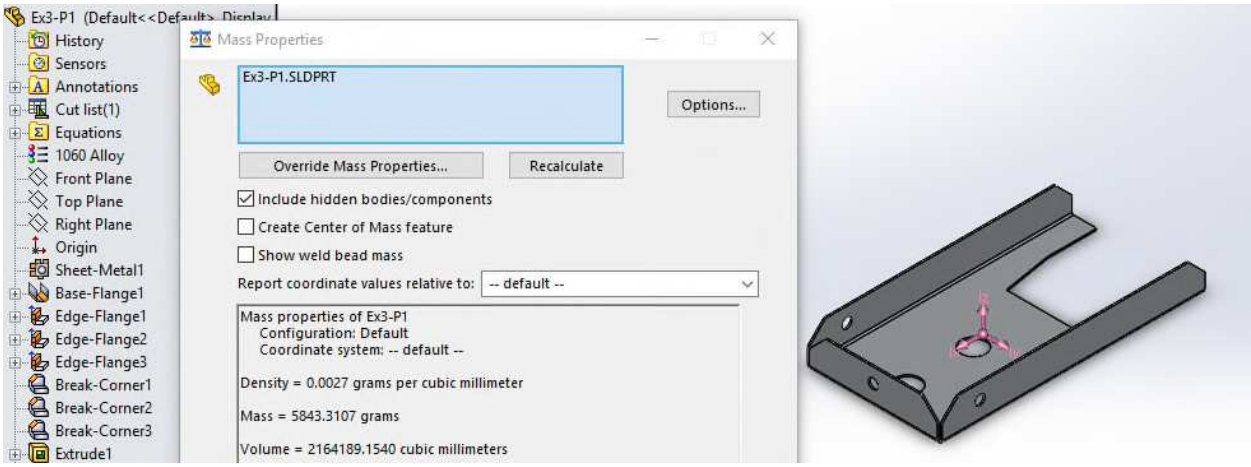

Introduction to SolidWorks A Comprehensive Guide with Applications in 3D Printing 1st edition Onwubolu Solutions Manual

4. Problem 19-4

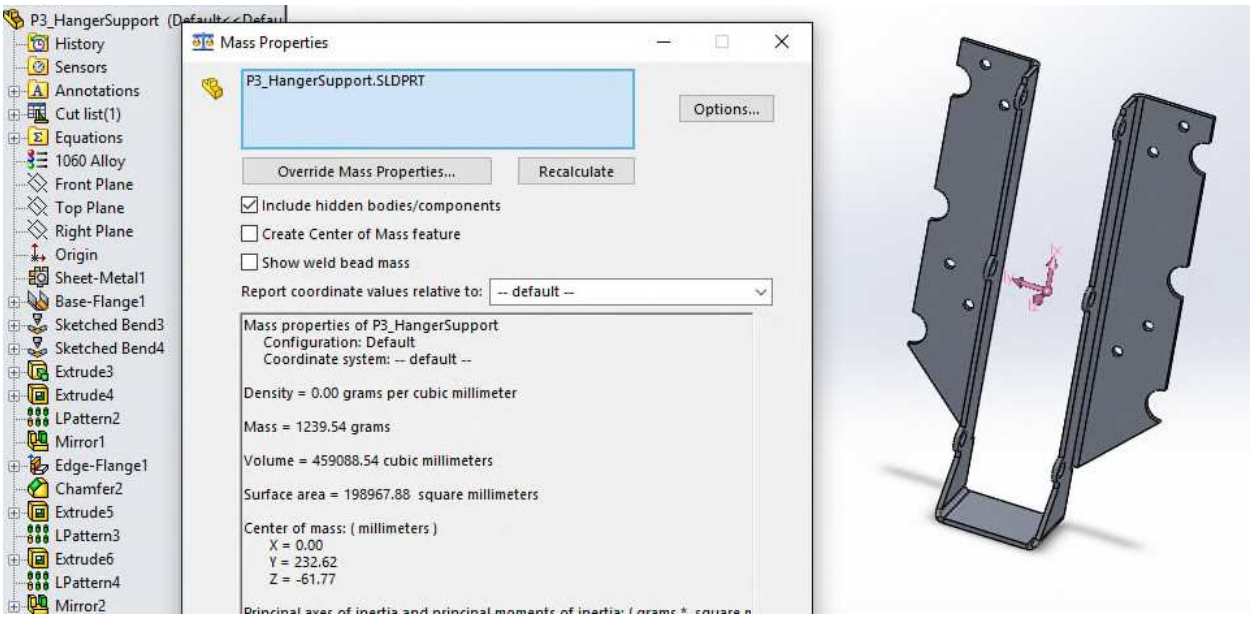

5. Problem 19-5

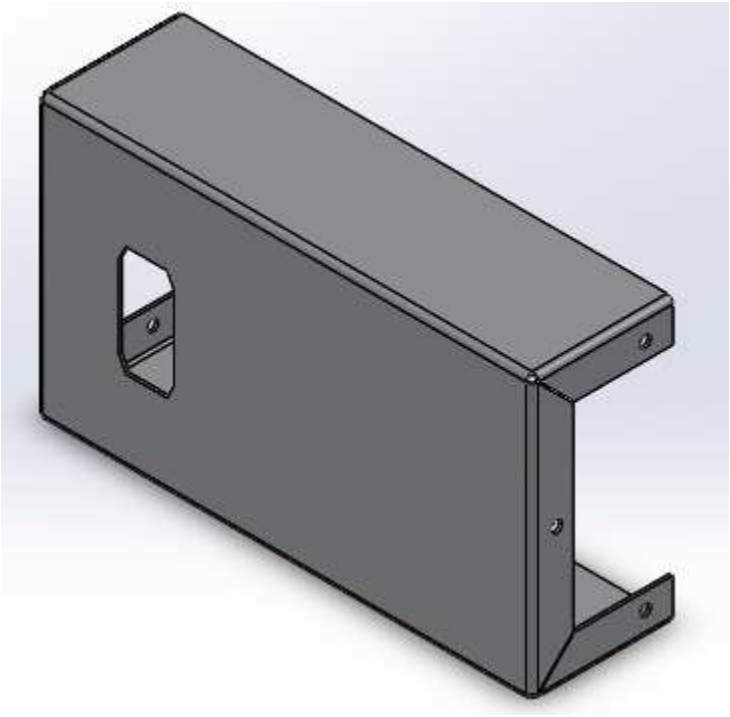

Introduction to SolidWorks A Comprehensive Guide with Applications in 3D Printing 1st edition Onwubolu Solutions Manual

Chapter 20: Weldments

1—9 are to be carried out as projects based on the content of chapter 20

Chapter 22: Power Transmission Elements

Projects 1—3 are to be carried out as projects based on the content of chapter 22

Chapter 23: Cam Design

Projects 1—2 are to be carried out as projects based on the content of chapter 23

Introduction to SolidWorks A Comprehensive Guide with Applications in 3D Printing 1st edition Onwubolu Solutions Manual

Chapter 31: Sustainability Design for Parts

1. Problem 31-1

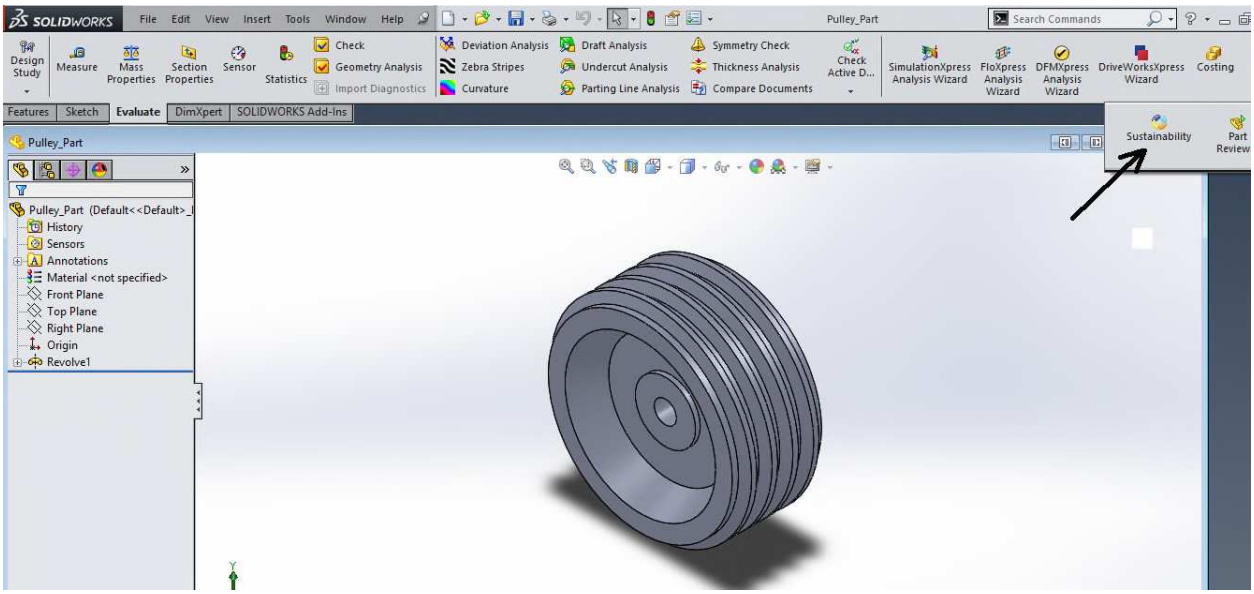

Step 1

Step 2 Material

Introduction to SolidWorks A Comprehensive Guide with Applications in 3D Printing 1st edition Onwubolu Solutions Manual

Step 3 Manufacturing

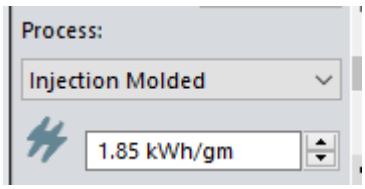

Step 4 Process

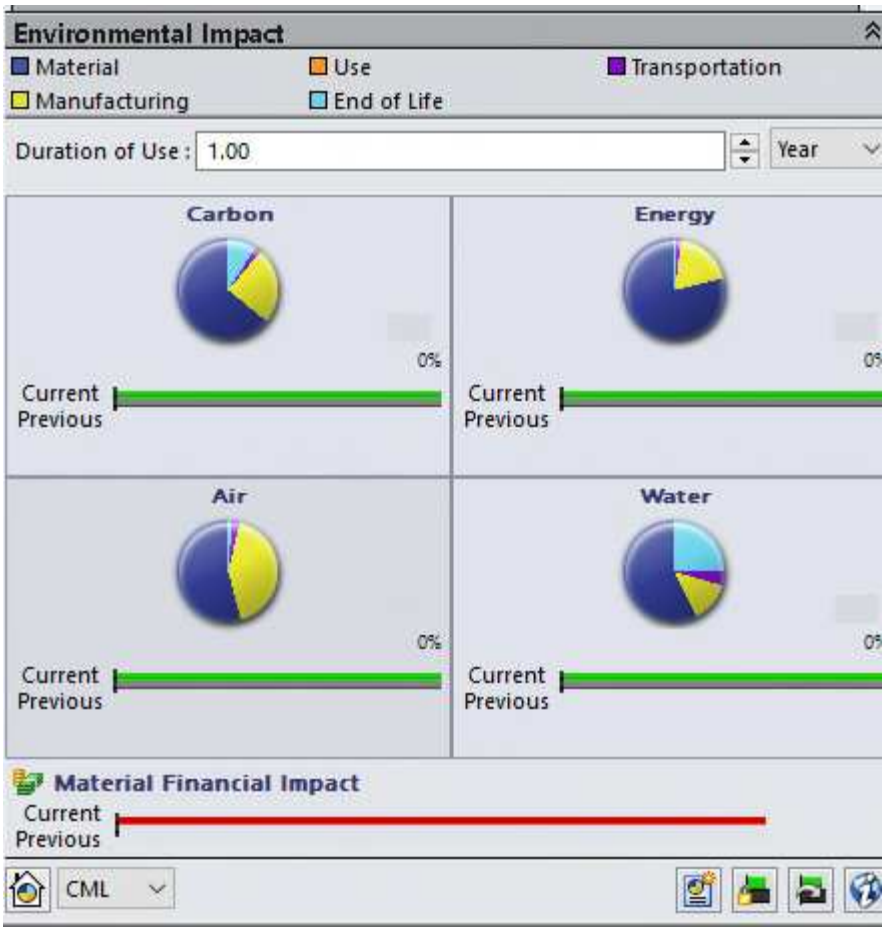

Step 5

2. **Problem 31-2 to 13-4**

Repeat problem with models opened

Introduction to SolidWorks A Comprehensive Guide with Applications in 3D Printing 1st edition Onwubolu Solutions Manual

Chapter 33: Evaluating the Cost of Machined Parts

1. Problem 33-1

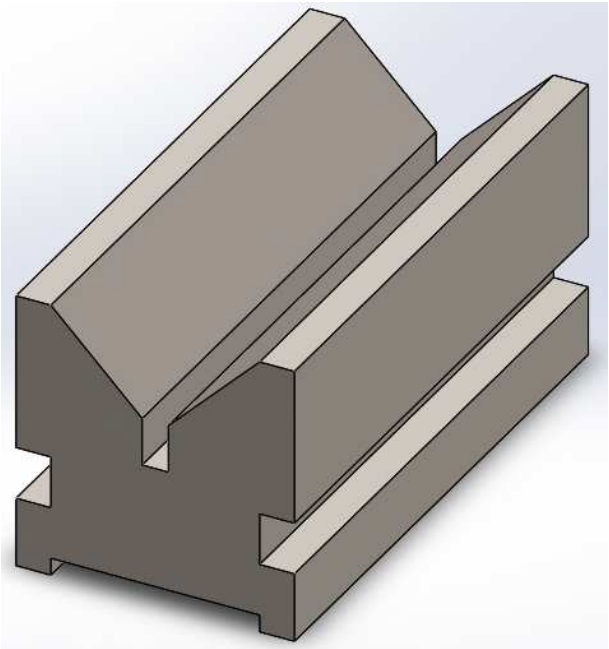

Step 1

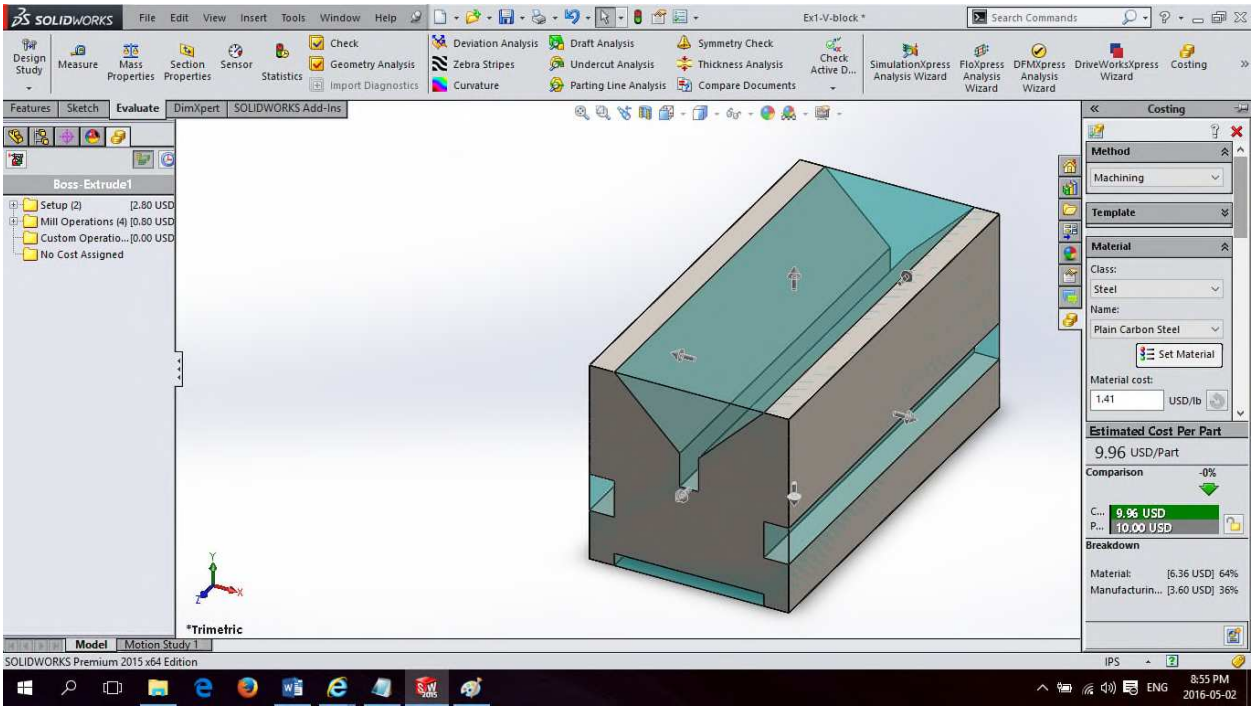

Machining: Steel

Introduction to SolidWorks A Comprehensive Guide with Applications in 3D Printing 1st edition Onwubolu Solutions Manual

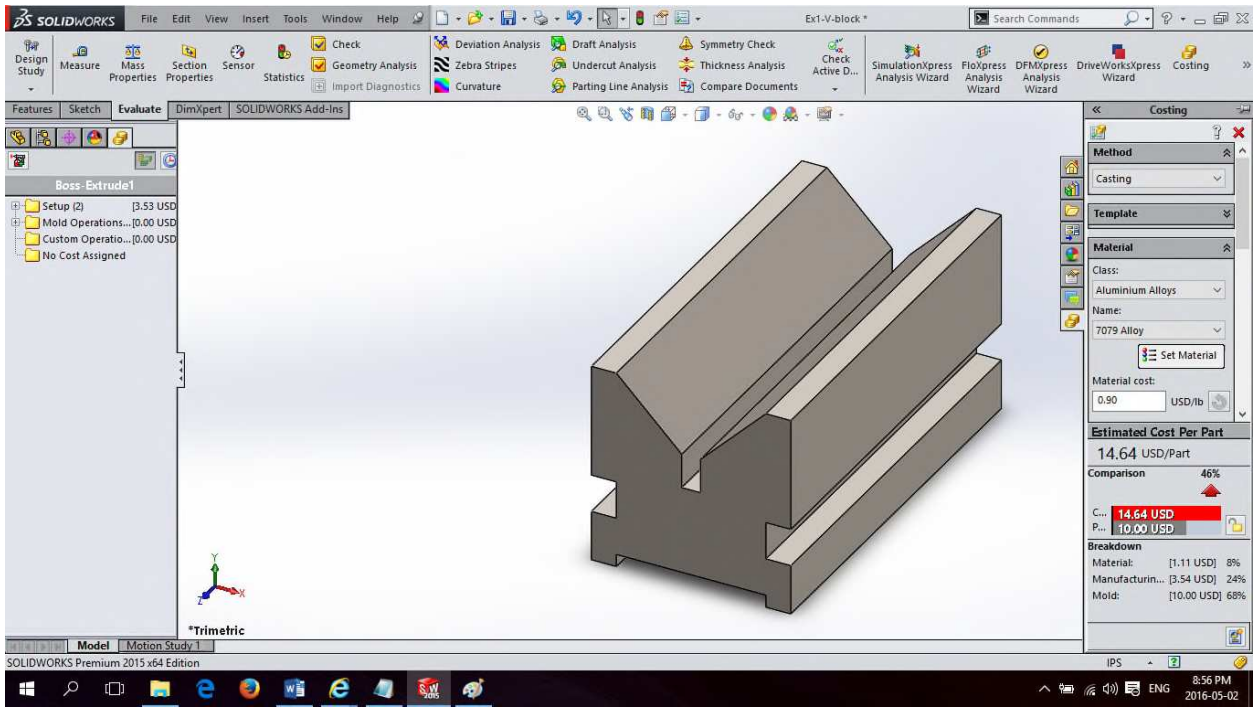

Casting: Aluminum

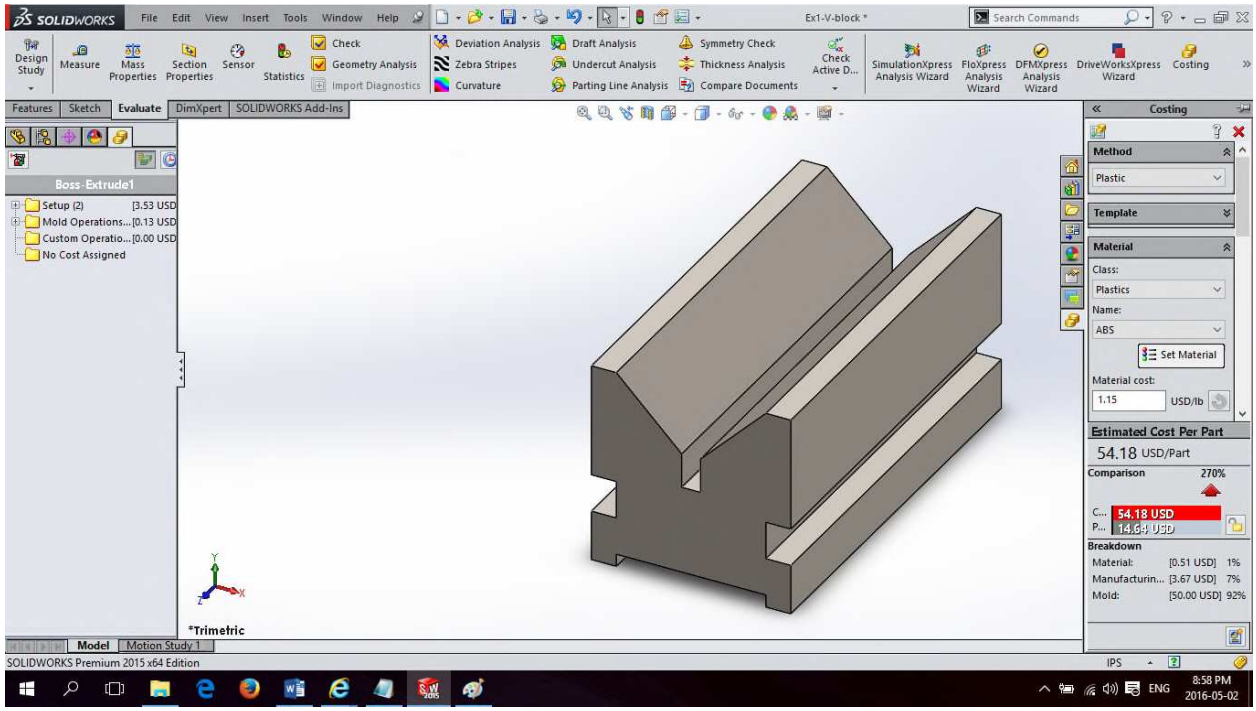

Injection Molding: Plastic

Introduction to SolidWorks A Comprehensive Guide with Applications in 3D Printing 1st edition Onwubolu Solutions Manual

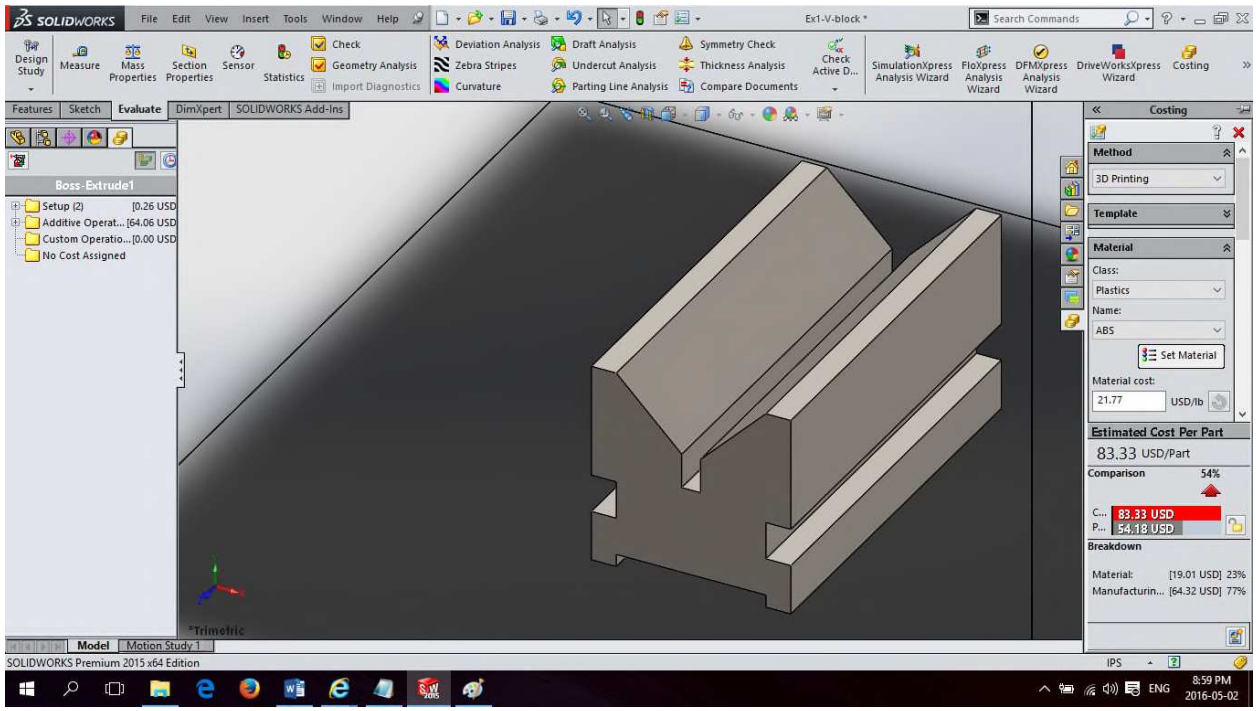

3D Printing: Plastic (ABS)

2. Problem 33-2

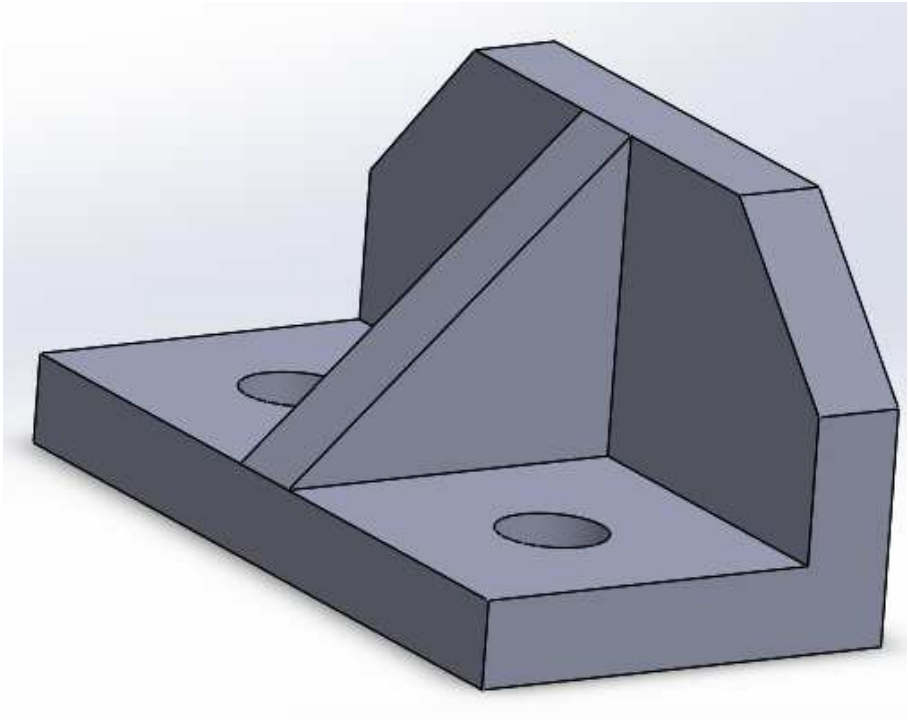

Step 1

Introduction to SolidWorks A Comprehensive Guide with Applications in 3D Printing 1st edition Onwubolu Solutions Manual

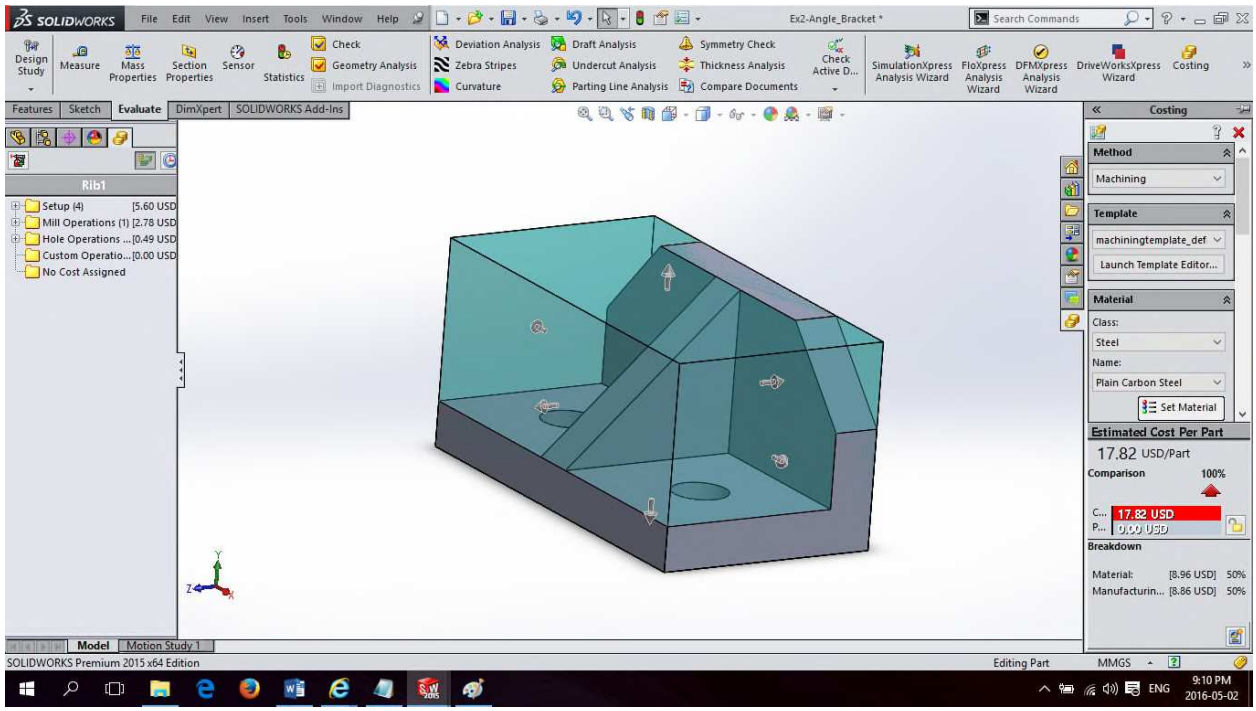

Machining: Steel

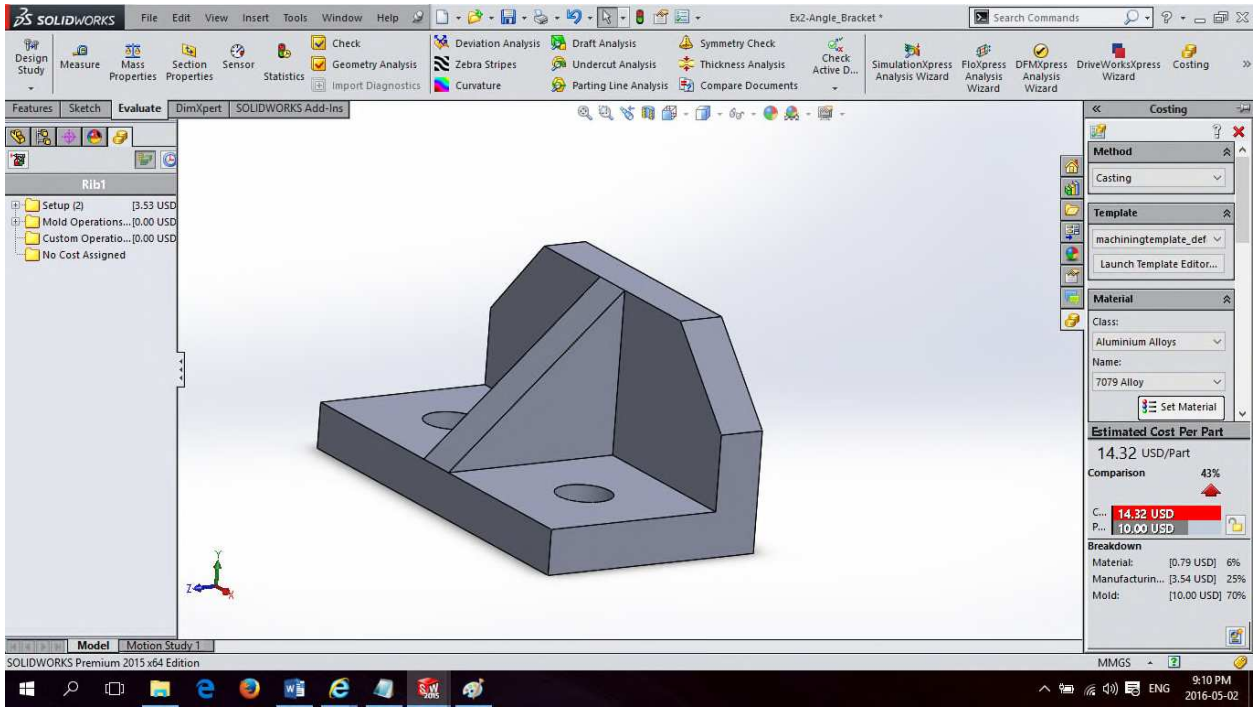

Casting: Aluminum

Introduction to SolidWorks A Comprehensive Guide with Applications in 3D Printing 1st edition Onwubolu Solutions Manual

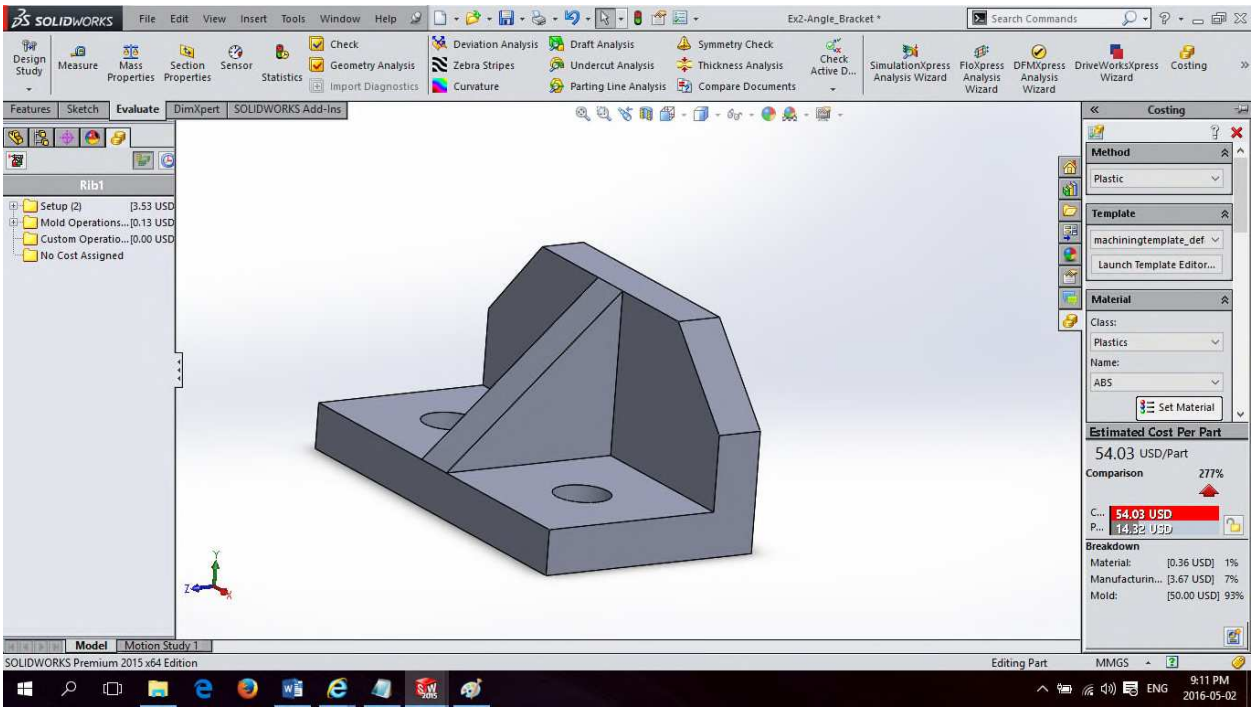

Injection Molding: Plastic

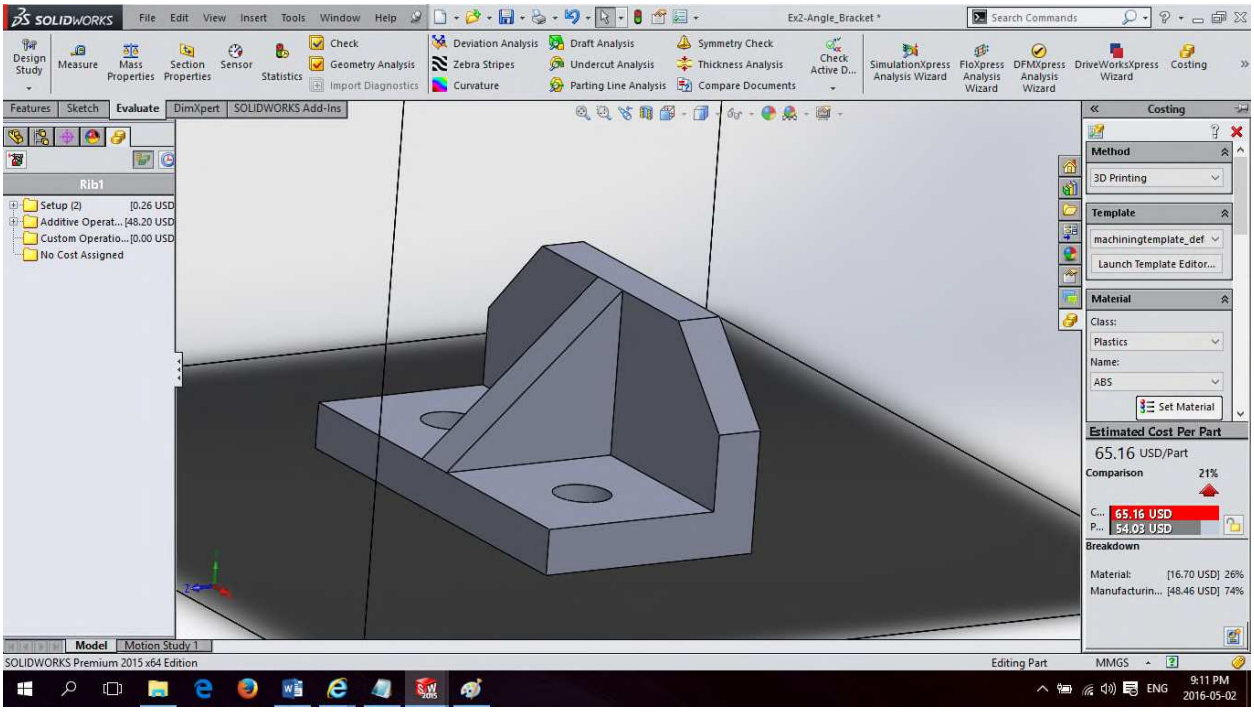

3D Printing: Plastic (ABS)

Introduction to SolidWorks A Comprehensive Guide with Applications in 3D Printing 1st edition Onwubolu Solutions Manual

3. Problem 33-3

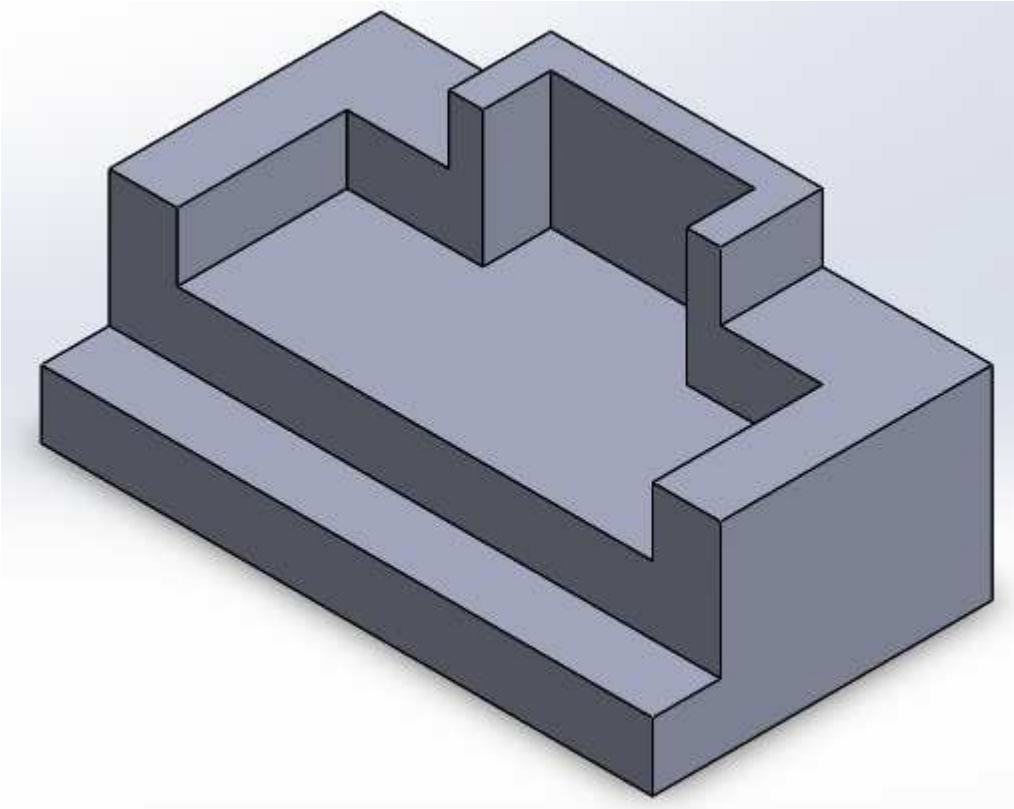

Step 1

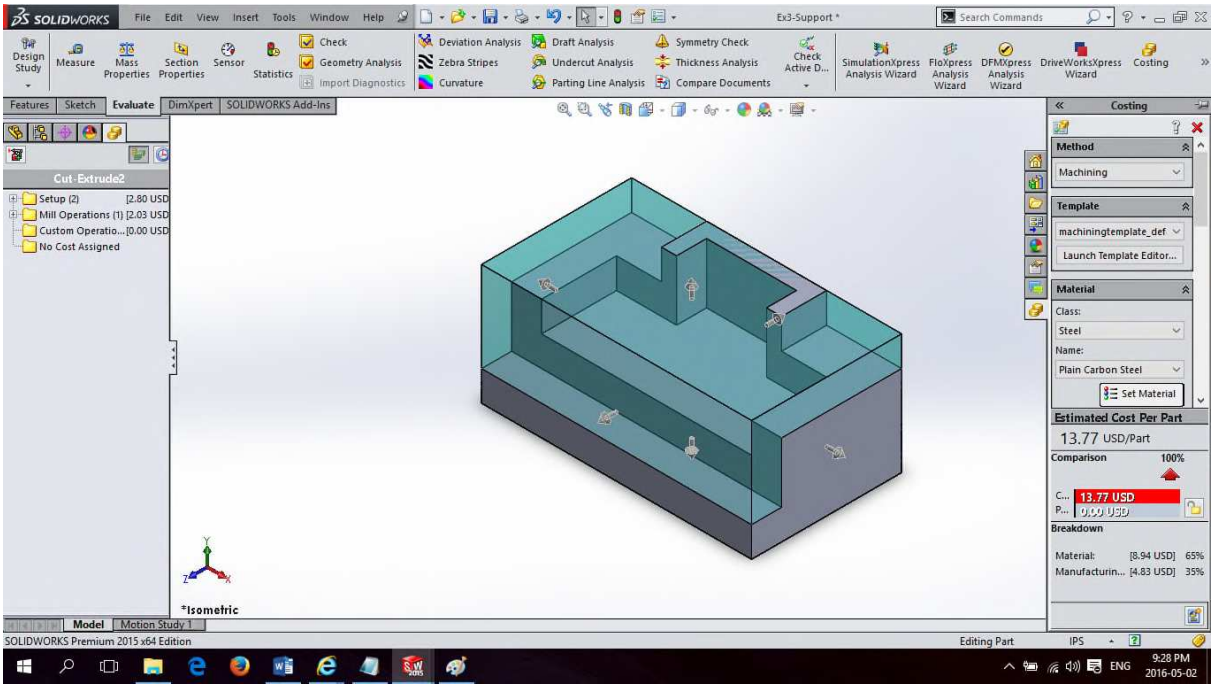

Machining: Steel

Introduction to SolidWorks A Comprehensive Guide with Applications in 3D Printing 1st edition Onwubolu Solutions Manual

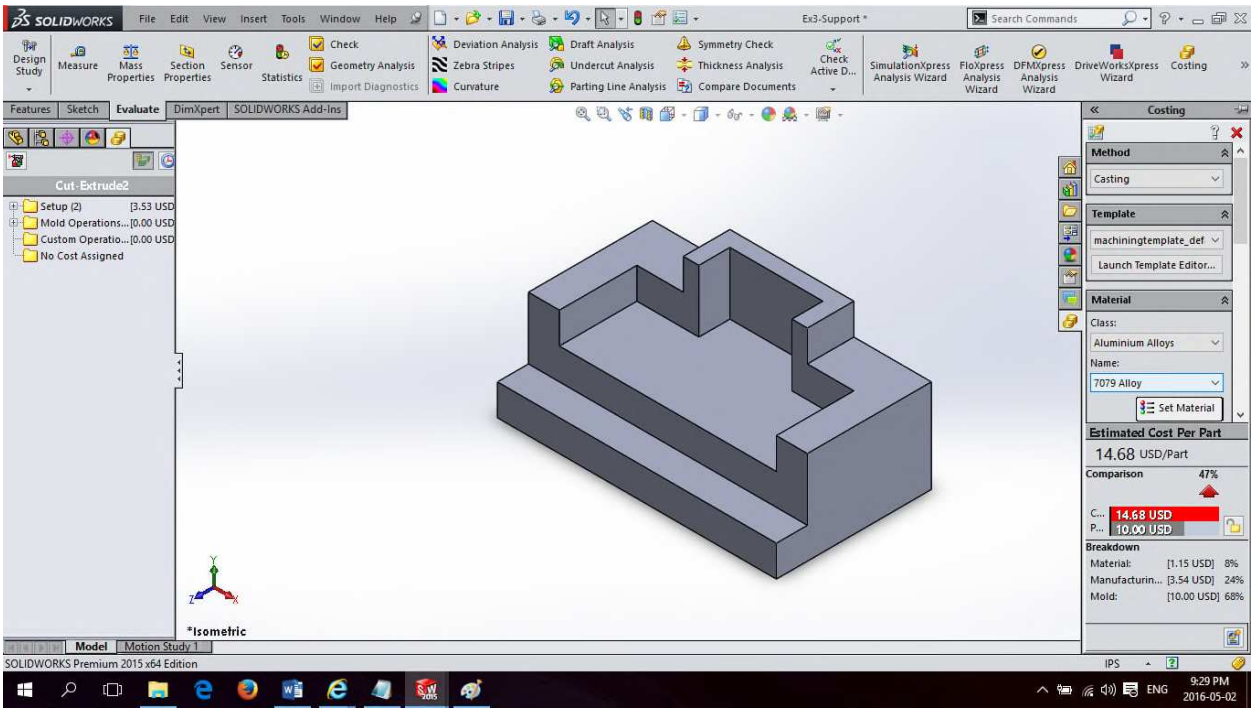

Casting: Aluminum

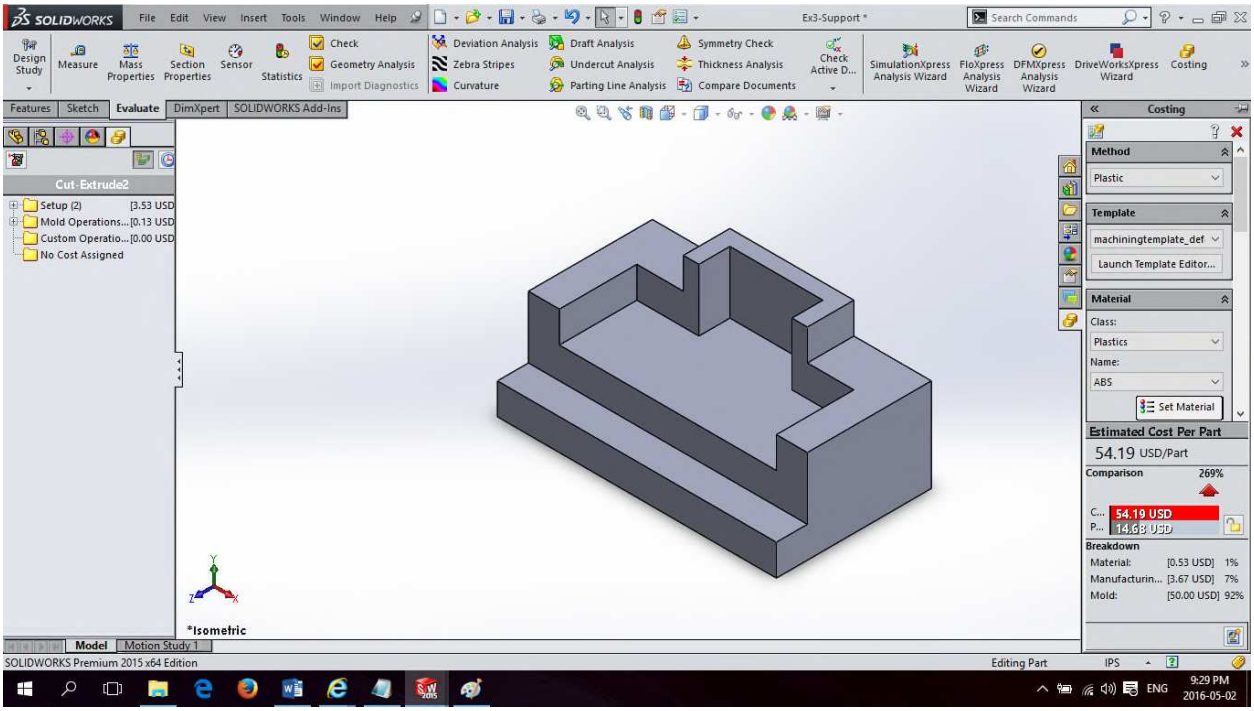

Injection Molding: Plastic

Introduction to SolidWorks A Comprehensive Guide with Applications in 3D Printing 1st edition Onwubolu Solutions Manual

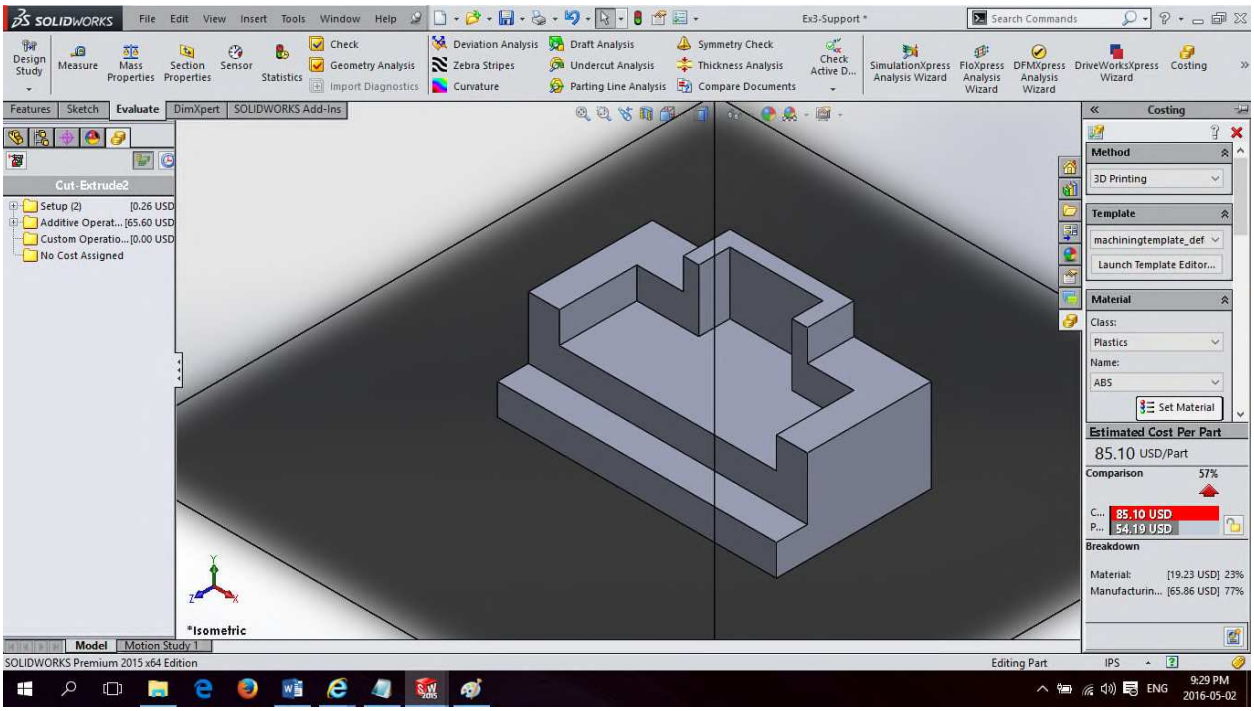

3D Printing: Plastic (ABS)

Introduction to SolidWorks A Comprehensive Guide with Applications in 3D Printing 1st edition Onwubolu Solutions Manual

34: Finite Element Analysis Using SolidWorks

1. Problem 34-1

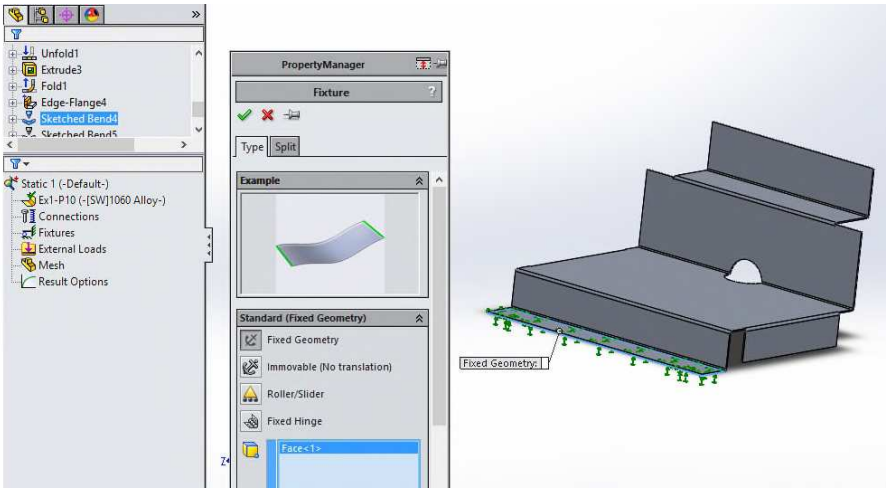

Step 1

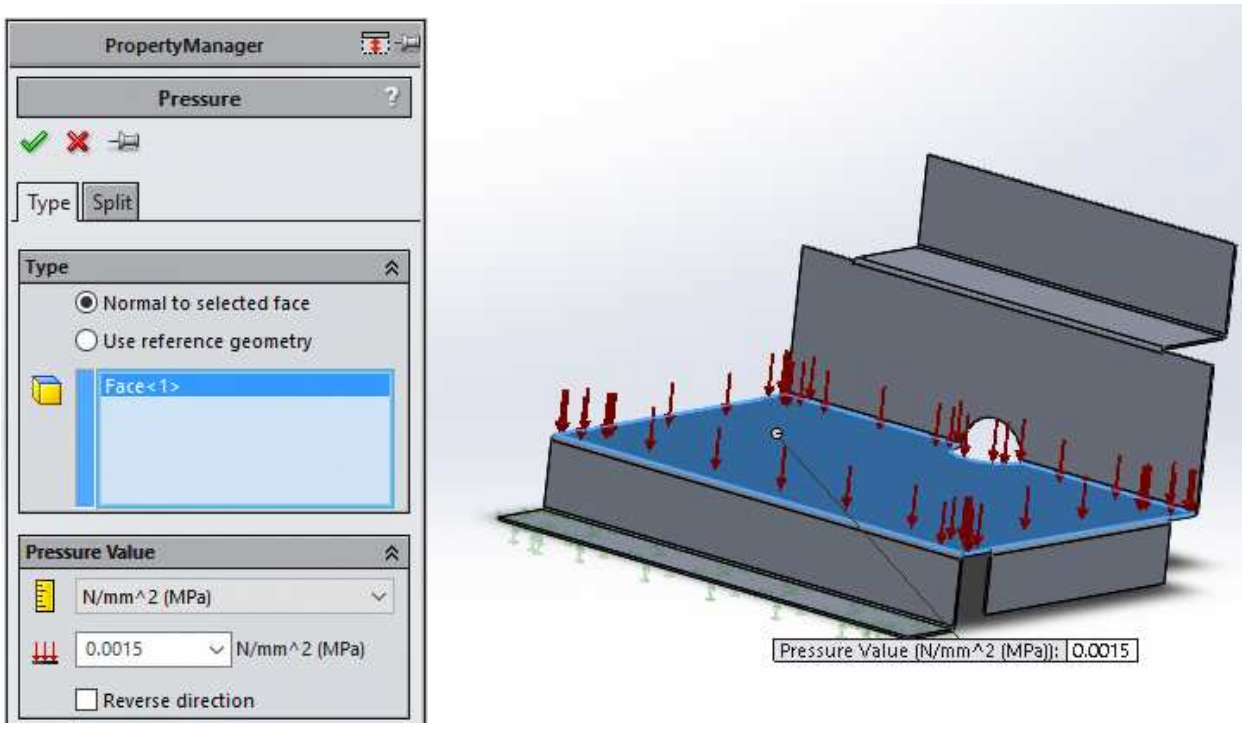

Step 2

Introduction to SolidWorks A Comprehensive Guide with Applications in 3D Printing 1st edition Onwubolu Solutions Manual

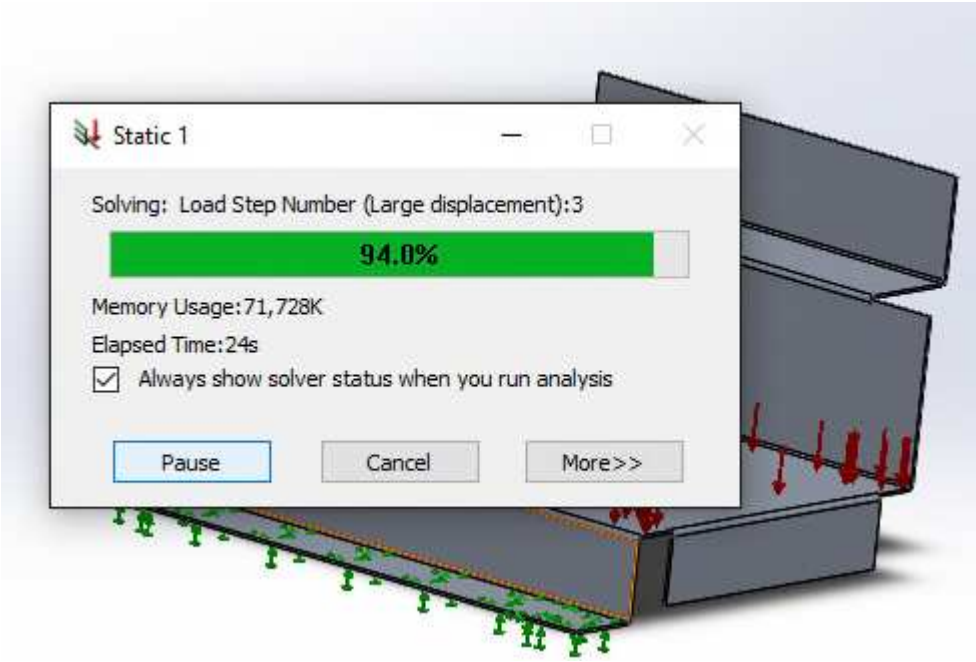

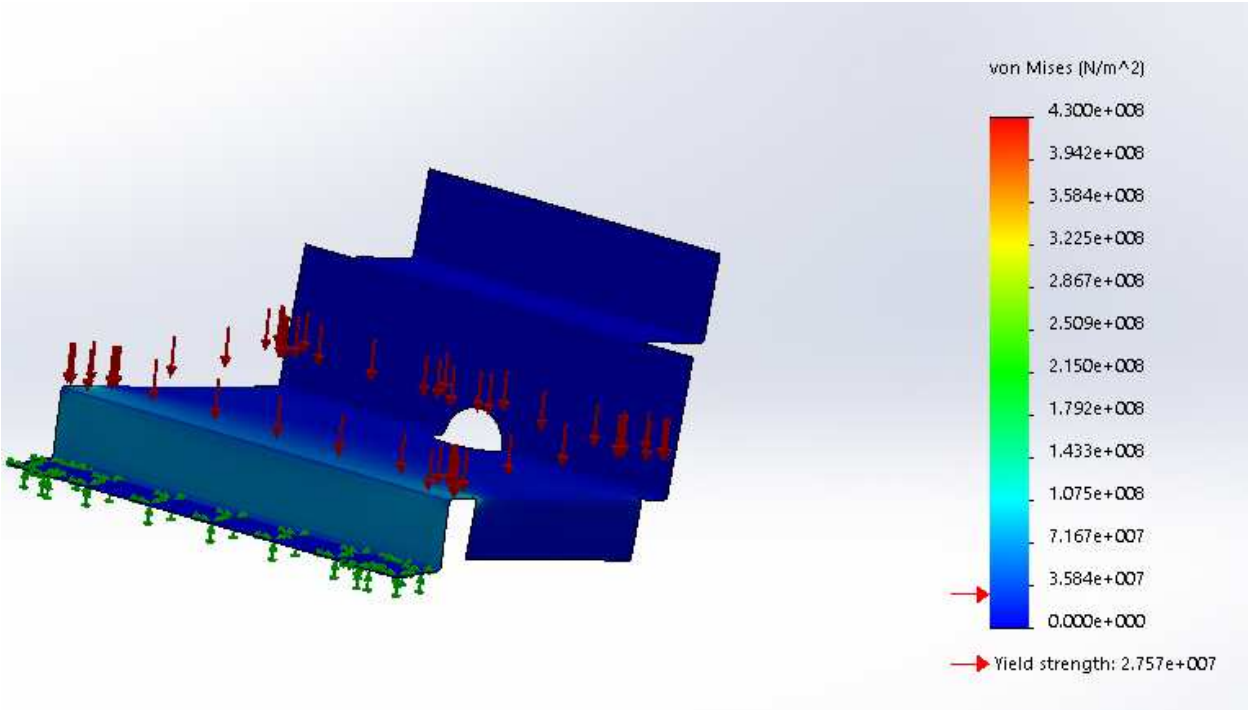

Repeat with conditions in (b) and (c)

Introduction to SolidWorks A Comprehensive Guide with Applications in 3D Printing 1st edition Onwubolu Solutions Manual

2. Problem 34-2

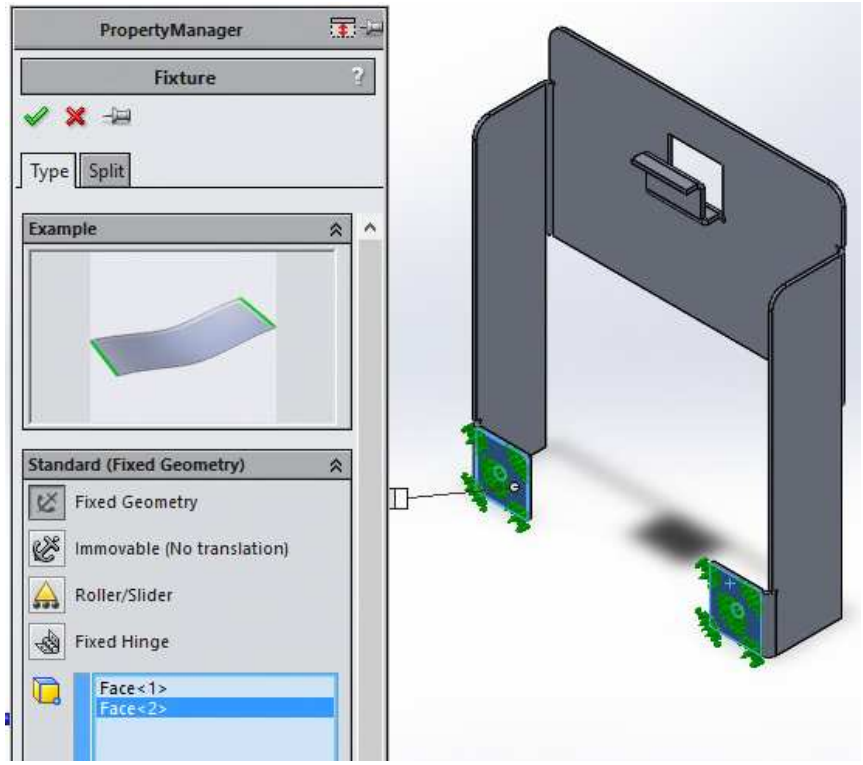

Step 1

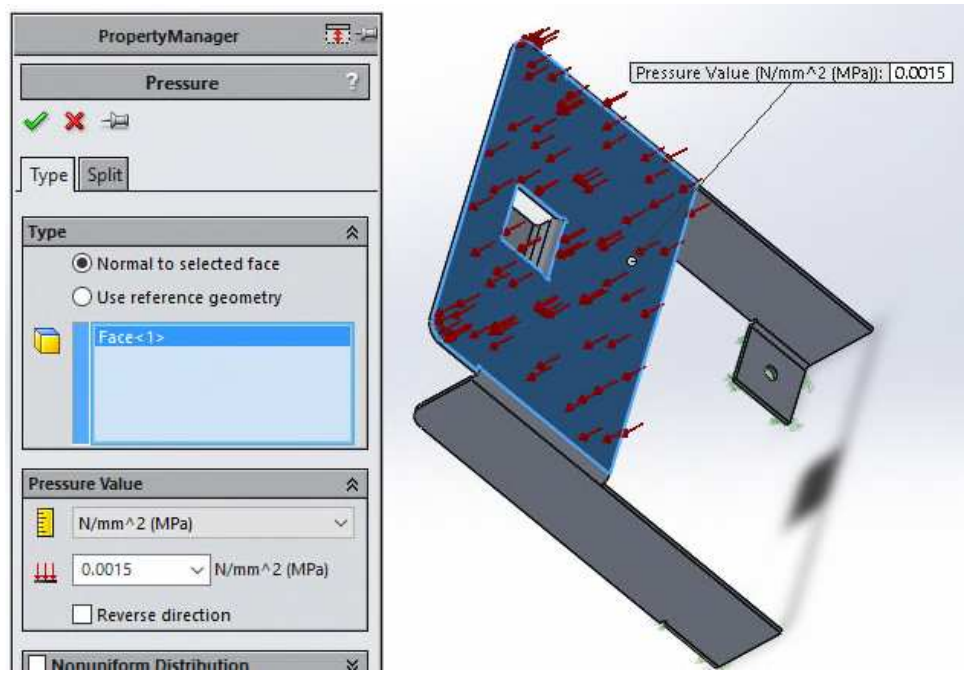

Step 2

Introduction to SolidWorks A Comprehensive Guide with Applications in 3D Printing 1st edition Onwubolu Solutions Manual

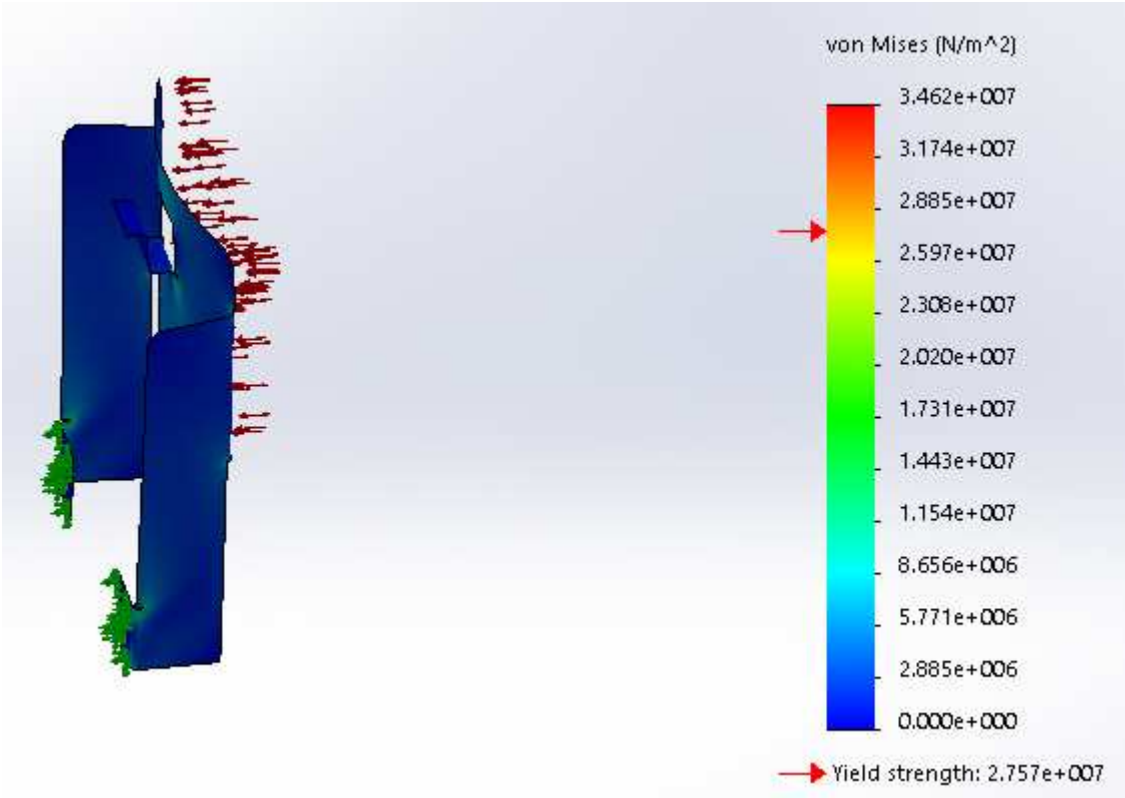

Step 3

Introduction to SolidWorks A Comprehensive Guide with Applications in 3D Printing 1st edition Onwubolu Solutions Manual

PowerPoint
to accompany

Introduction to *SOLIDWORKS:* A Comprehensive Guide with Applications in 3D Printing

Godfrey Onwubolu

Chapter 2

With vital Source EBOOK

CRC Press
Taylor & Francis Group

Introduction to SolidWorks A Comprehensive Guide with Applications in 3D Printing 1st edition Onwubolu Solutions Manual

Fig_2-1

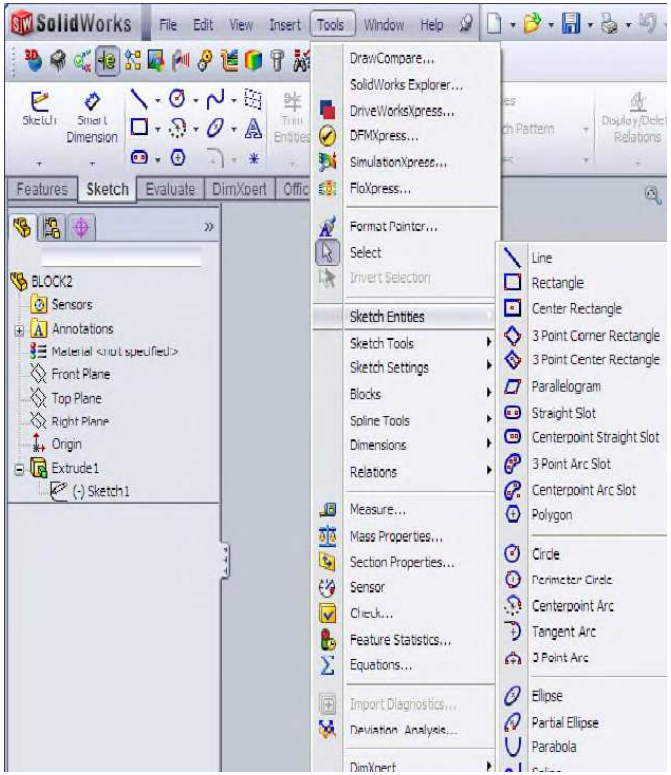
SolidWorks
File
Edit
View
Insert
Tools
Window
Help
Features
Sketch
Evaluate
DimXpert
BLOCK2
Sensors
Annotations
Front Plane
Top Plane
Right Plane
Origin
Extrude1
(-) Sketch1
DrawCompare...
SolidWorks Explorer...
DriveWorksXpress...
DFMXpress...
SimulationXpress...
FloXpress...
Format Painter...
Select
Invert Selection
Sketch Entities
Sketch Tools
Sketch Settings
Blocks
Spline Tools
Dimensions
Relations
Measure...
Mass Properties...
Section Properties...
Sensor
Check...
Feature Statistics...
Equations...
Import Diagnostics...
Deviation Analysis...
DimXpert
Line
Rectangle
Center Rectangle
3 Point Corner Rectangle
3 Point Center Rectangle
Parallelogram
Straight Slot
Centerpoint Straight Slot
3 Point Arc Slot
Centerpoint Arc Slot
Polygon
Circle
Perimeter Circle
Centerpoint Arc
Tangent Arc
3 Point Arc
Ellipse
Partial Ellipse
Parabola

Fig_2-3

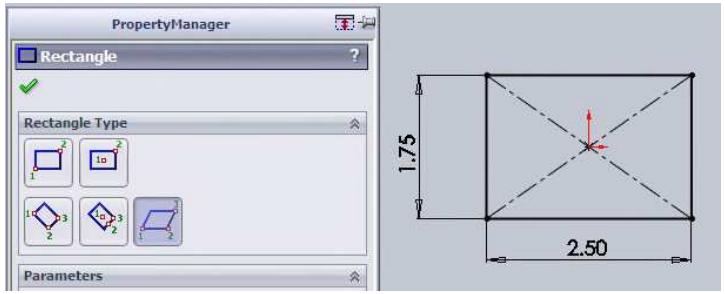
PropertyManager
Rectangle
Rectangle Type
Parameters
1.75
2.50

Fig_2-4

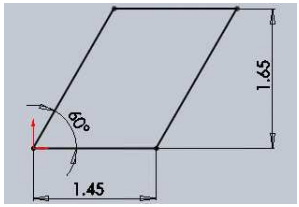
60°
1.65
1.45

Fig_2-5

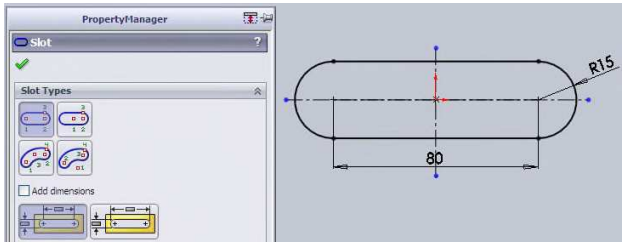

Fig_2-7

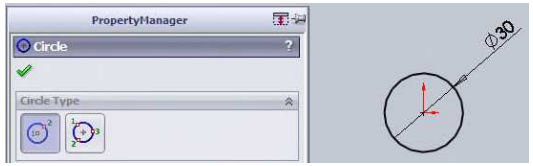

Fig_2-6

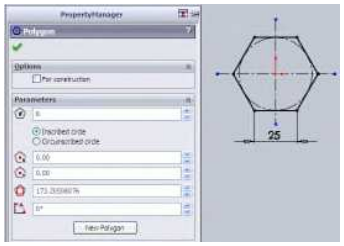

Fig_2-8

Fig_2-10

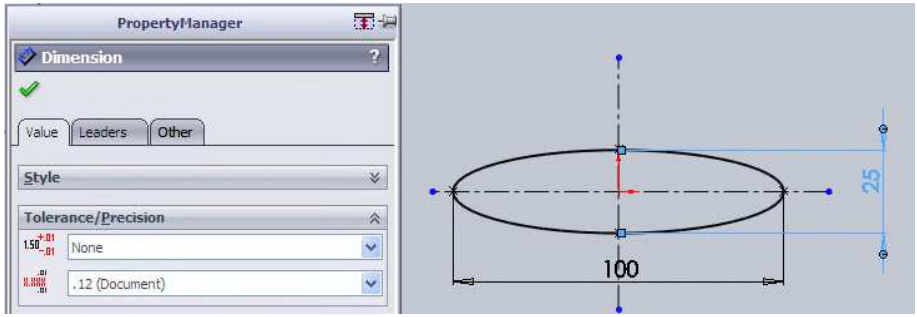

Fig_2-11

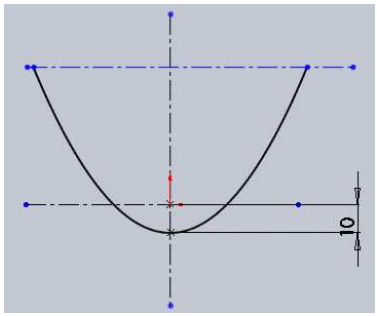

Fig_2-13

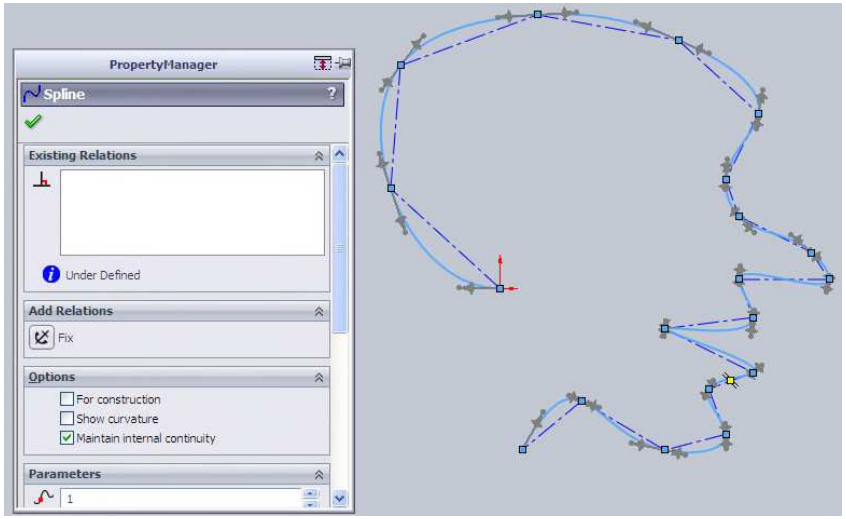
PropertyManager
Spline
Existing Relations
Under Defined
Add Relations
Fix
Options
For construction
Show curvature
Maintain internal continuity
Parameters
1

Fig_2-14

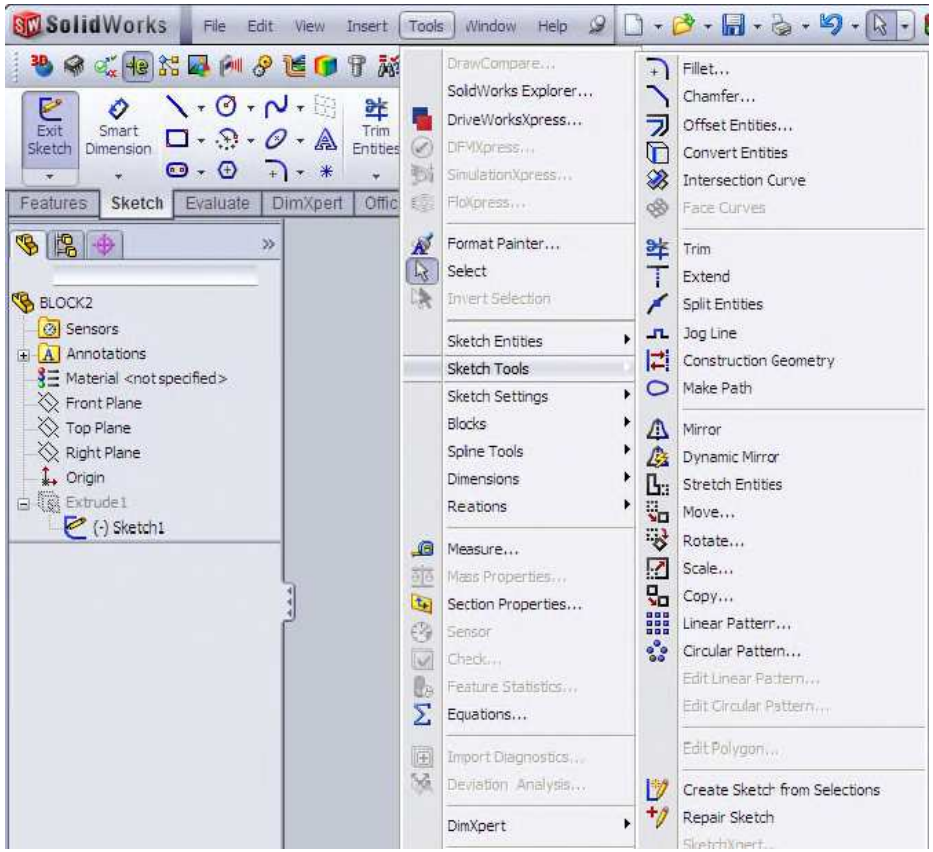
SolidWorks
File
Edit
View
Insert
Tools
Window
Help
Exit Sketch
Smart Dimension
Trim Entities
Features
Sketch
Evaluate
DimXpert
BLOCK2
Sensors
Annotations
Material <not specified>
Front Plane
Top Plane
Right Plane
Origin
Extrude1
(-) Sketch1
DrawCompare...
SolidWorks Explorer...
DriveWorksXpress...
DFMXpress...
SimulationXpress...
FloXpress...
Format Painter...
Select
Invert Selection
Sketch Entities
Sketch Tools
Sketch Settings
Blocks
Spline Tools
Dimensions
Reations
Measure...
Mass Properties...
Section Properties...
Sensor
Check...
Feature Statistics...
Equations...
Import Diagnostics...
Deviation Analysis...
DimXpert
Fillet...
Chamfer...
Offset Entities...
Convert Entities
Intersection Curve
Face Curves
Trim
Extend
Split Entities
Jog Line
Construction Geometry
Make Path
Mirror
Dynamic Mirror
Stretch Entities
Move...
Rotate...
Scale...
Copy...
Linear Patterr...
Circular Pattern...
Edit Linear Pattern...
Edit Circular Pattern...
Edit Polygon...
Create Sketch from Selections
Repair Sketch

Fig_2-18

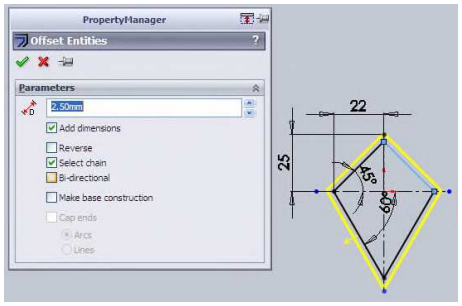

Fig_2-26

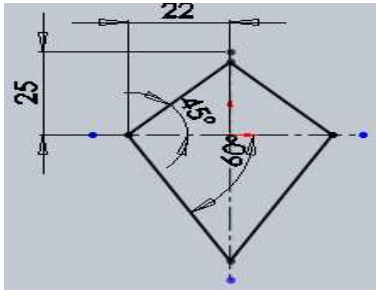

Fig_2-33

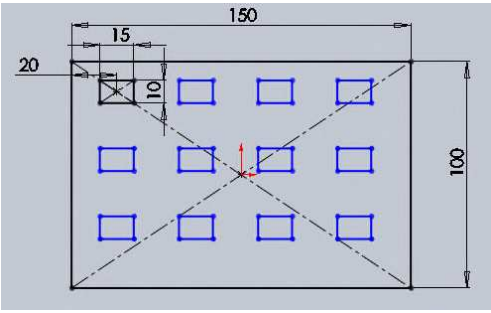

Fig_2-34

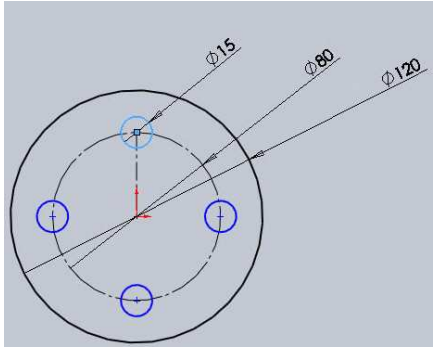

Fig_2-P10

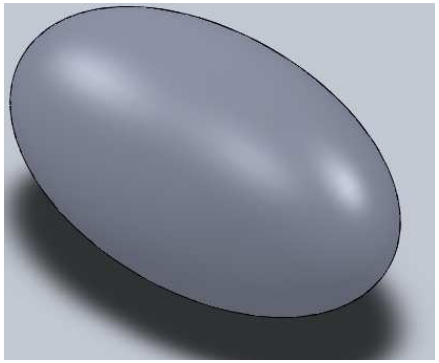
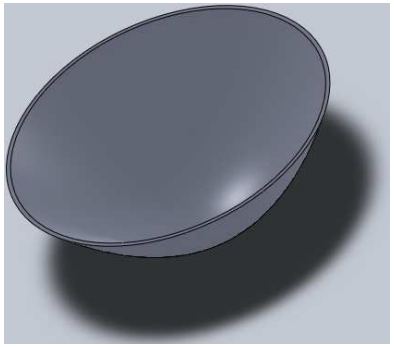
Fig_2-P11