# *Organic Thin Film Transistor Applications Materials to Circuits 1st edition Kaushik Solutions Manual*

SKU: 9781498736534-SOLUTIONS

Organic Thin Film Transistor Applications Materials to Circuits 1st edition Kaushik Solutions Manual

# Chapter 2

# OTFT Parameters, Structures, Models, Materials, Fabrication and Applications - A Review

## Solution Manual of Numerical Problems

**Q 1.** For a *p*-type top gate top contact organic thin film transistor with $\mu$=0.14cm$^2$/Vs, $\varepsilon_r$=3.9, $t_{ox}$=200nm, $W$=1mm, $L$=30μm and $V_t$=-3.2V, examine the relationship between the current and the terminal voltages.

Solution:

$$I_{ds} = \frac{1}{2}\mu_n C_{ox}\frac{W}{L}\left(V_{gs} - V_t\right)^2$$

$$C_{ox} = \frac{\varepsilon_0 \varepsilon_r}{t_{ox}} = \frac{3.9 \times 8.85 \times 10^{-12} F/m}{200 \times 10^{-9}}$$

$$C_{ox} = 0.172 \times 10^{-3} F/m^2$$

$$I_{ds} = \frac{1}{2} \times 0.14 \times 10^{-4} \times 0.172 \times 10^{-3} \times \left(\frac{1 \times 10^{-3}}{30 \times 10^{-6}}\right)\left(V_{gs} - V_t\right)^2$$

$$I_{ds} = 39.9 \times 10^{-9}\left(V_{gs} - V_t\right)^2$$



Organic Thin Film Transistor Applications Materials to Circuits 1st edition Kaushik Solutions Manual

**Q 2.** Using field dependent mobility concept in organic thin film transistor, find zero bias mobility ($\mu_0$). The device mobility $\mu$=0.02cm$^2$/V.s, enhancement factor is 0.2, and source-gate voltage ($Vgs$) are of -14V and threshold voltage ($V_t$) of -3.2V.

Solution:

$$\mu = \mu_0 (V_{gs} - V_t)^{\alpha}$$

$$0.02 = \mu_0 (-14 - (-3.2))^{0.2}$$

$$0.02 = \mu_0 (10.8)^{0.2}$$

$$\mu_0 = \frac{0.02}{1.609}$$

$$\mu_0 = 0.0124 cm^2 / Vs .$$

**Q 3.** Extract the current On-Off ratio ($I_{on}/I_{off}$) of an organic thin film transistor with $\mu$=0.015cm$^2$/Vs, $V_{ds}$= -10V, $V_{gs}$= -10V, $V_t$= -1.3V, $C_{ox}$=800nF/cm$^2$, 20nm of OSC thickness ($t_{osc}$) and $\sigma$ =1S/cm.

Solution:

$$\frac{I_{on}}{I_{off}} = \frac{C_i \mu (V_{gs} - V_t)^2}{t_{osc} V_{ds} \sigma}$$

$$\frac{I_{on}}{I_{off}} = \frac{800 nF / cm^2 \times 0.015 cm^2 / Vs \times (10 - 1.3)^2}{20 nm \times 10 V \times 1 S / cm}$$

$$\frac{I_{on}}{I_{off}} = 454.14 \times 10^{-4} = 0.045$$

**Q 4.** Find the operating mode and estimate the drive current of an organic thin film transistor for the given parameters: $\mu$=1.64cm$^2$/Vs, $W$=120µm, $L$=10µm, $C_{ox}$ =800nF/cm$^2$, $Vgs$ =1.6V, $Vds$=2V and $V_t$=1.2V.

Solution:

$$V_{gs} - V_t = 1.6 - 1.2$$



Organic Thin Film Transistor Applications Materials to Circuits 1st edition Kaushik Solutions Manual

$$V_{gs} - V_t \le V_{ds}$$

Hence the device is operating in saturation mode.

$$I_d = \frac{1}{2}\mu_n C_{ox}\frac{W}{L}\left(V_{gs} - V_t\right)^2 = \frac{1}{2} \times 1.64 cm^2 / Vs \times 800 nF / cm^2 \times \left(\frac{120}{10}\right)(1.6 - 1.2)^2 V$$

$$I_d = 1.259 \mu A$$



Organic Thin Film Transistor Applications Materials to Circuits 1st edition Kaushik Solutions Manual

# Chapter- 2

## OTFT Parameters, Structures, Models, Materials, Fabrication and Applications - A Review

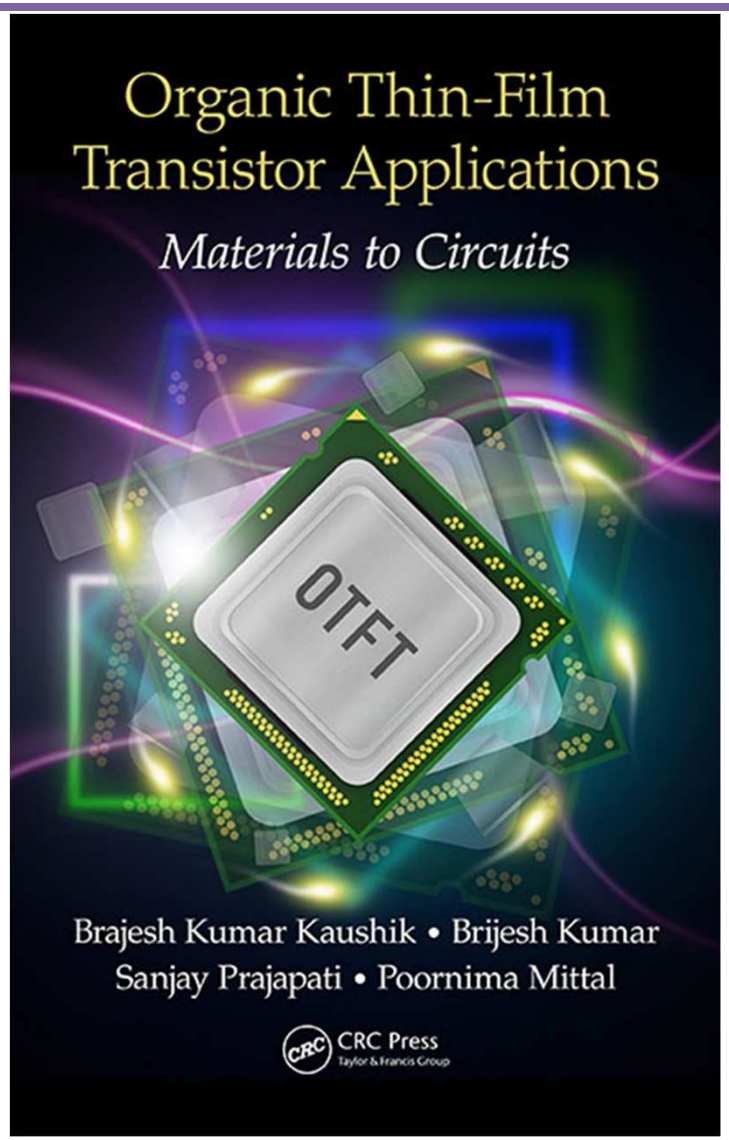




Organic Thin Film Transistor Applications Materials to Circuits 1st edition Kaushik Solutions Manual

# Outline of the Chapter

- Introduction
- Motivation Behind this Emerging Research Area
- Organic Thin Film Transistor
- OTFT Operating Principle, Its Advantages and Applications
- OTFT Structures
- OTFT Characteristic Parameters
- Organic Semiconductor Materials Basics
- Other Materials Required for OTFTs
- Fabrication
- Summary



Organic Thin Film Transistor Applications Materials to Circuits 1st edition Kaushik Solutions Manual

# Important Landmarks and Introduction

- Researchers realized in 1970 that some applications, like displays, RFID tags, required large array of low cost electronics which was not possible with silicon.

- This marked the advent of amorphous silicon TFTs (a-Si-TFTs).
- Discovery and Development of the conducting polymers (Polyacetylene-pure state is poor conductor+$I_2$) by Dr. H. Shirakawa, Dr. Alan G. MacDiarmid and Dr. Alan. J. Heeger created a new research field in 1976.

- **Organic Semiconductor Materials:**
  - **Conducting Polymers**: Polythiophene group (P3HT, P3OT, P3AT)
  - **Small Molecules**: Pentacene, CuPc, PCBM, $F_{16}$CuPC.
- First Organic / Polymer Thin Film Transistor (OTFT/PTFT) was demonstrated properly – 1986.



Organic Thin Film Transistor Applications Materials to Circuits 1st edition Kaushik Solutions Manual

# Motivation and Why OTFT??

OTFTs provide various important benefits over TFTs and MOSFET/CMOS based on inorganic semiconductor materials:

- ✓ Mechanical flexibility: Foldable, Bendable, Lightweight
- ✓ Compatibility with plastic substances
- ✓ Organic displays are relatively cheap.
- ✓ Polymer based TFTs with electrical characteristics comparable to or better than (a-Si-H) TFTs devices have been demonstrated.
- ✓ Does not require a glass substrate as amorphous silicon does.
- ✓ Chemical tunability of conducting polymers.
- ✓ Easy integration in different device applications.
- ✓ Ecological and economic benefits.



Organic Thin Film Transistor Applications Materials to Circuits 1st edition Kaushik Solutions Manual

# Classification of OTFTs Structures

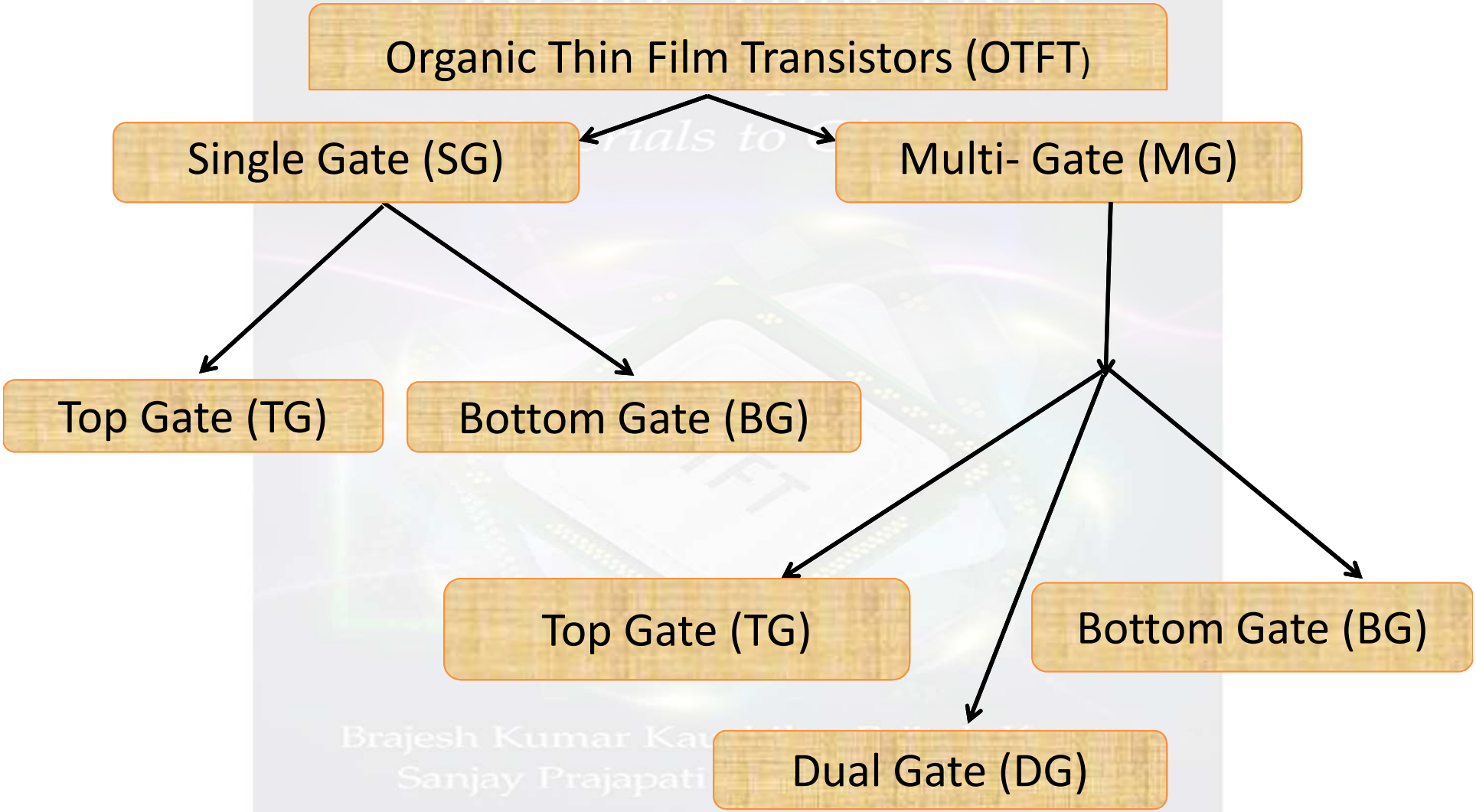




Organic Thin Film Transistor Applications Materials to Circuits 1st edition Kaushik Solutions Manual

# Classification of Single Gate OTFT Structures

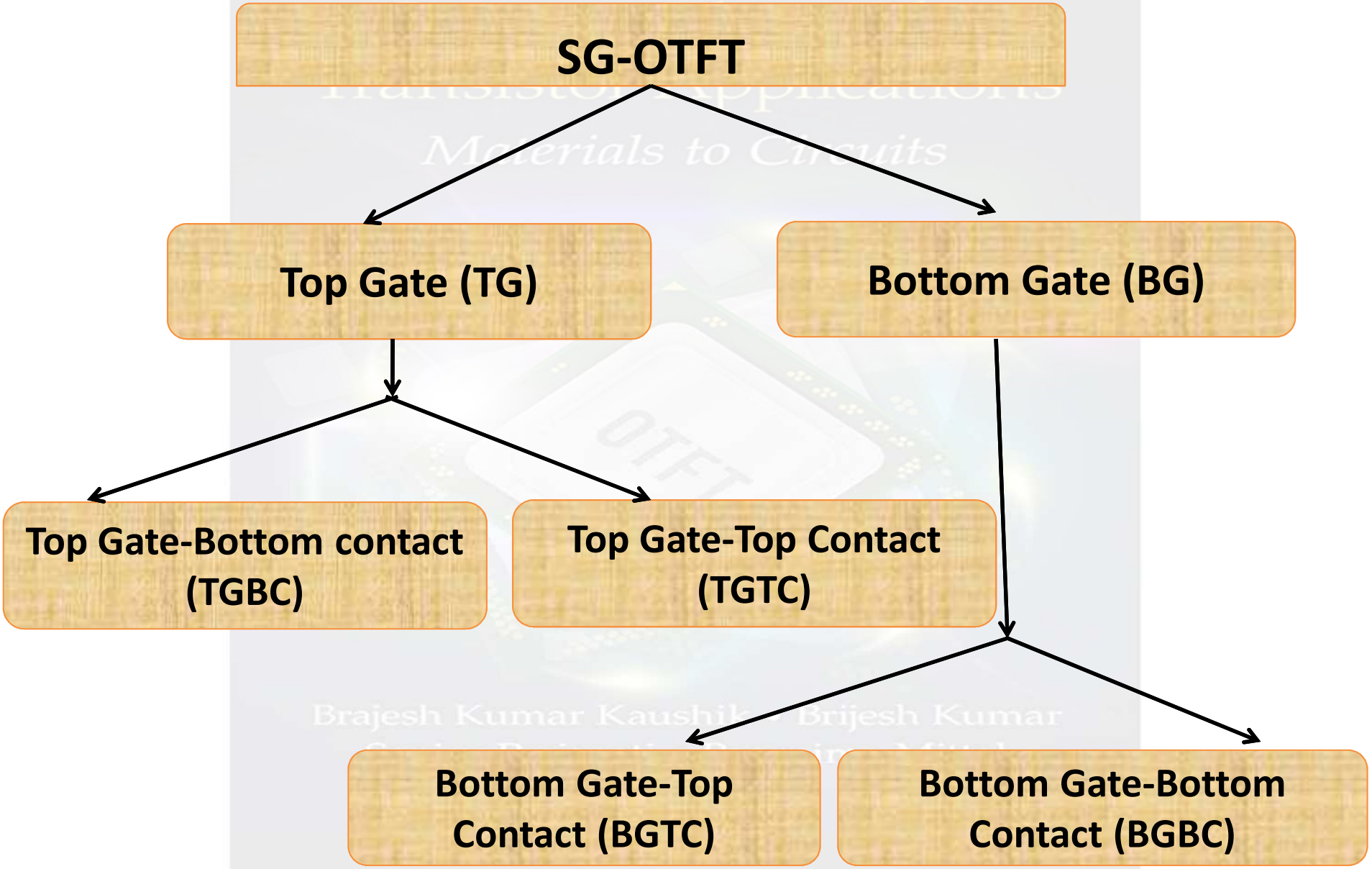




Organic Thin Film Transistor Applications Materials to Circuits 1st edition Kaushik Solutions Manual

# Organic Thin Film Transistor

- Transistor having organic semiconductor (small molecules/ conducting polymers) as active layer to current flow.

- Compatibility with plastic substances
- Lower-cost deposition process
- Lower temperature manufacturing (60-120$^{o}$C)

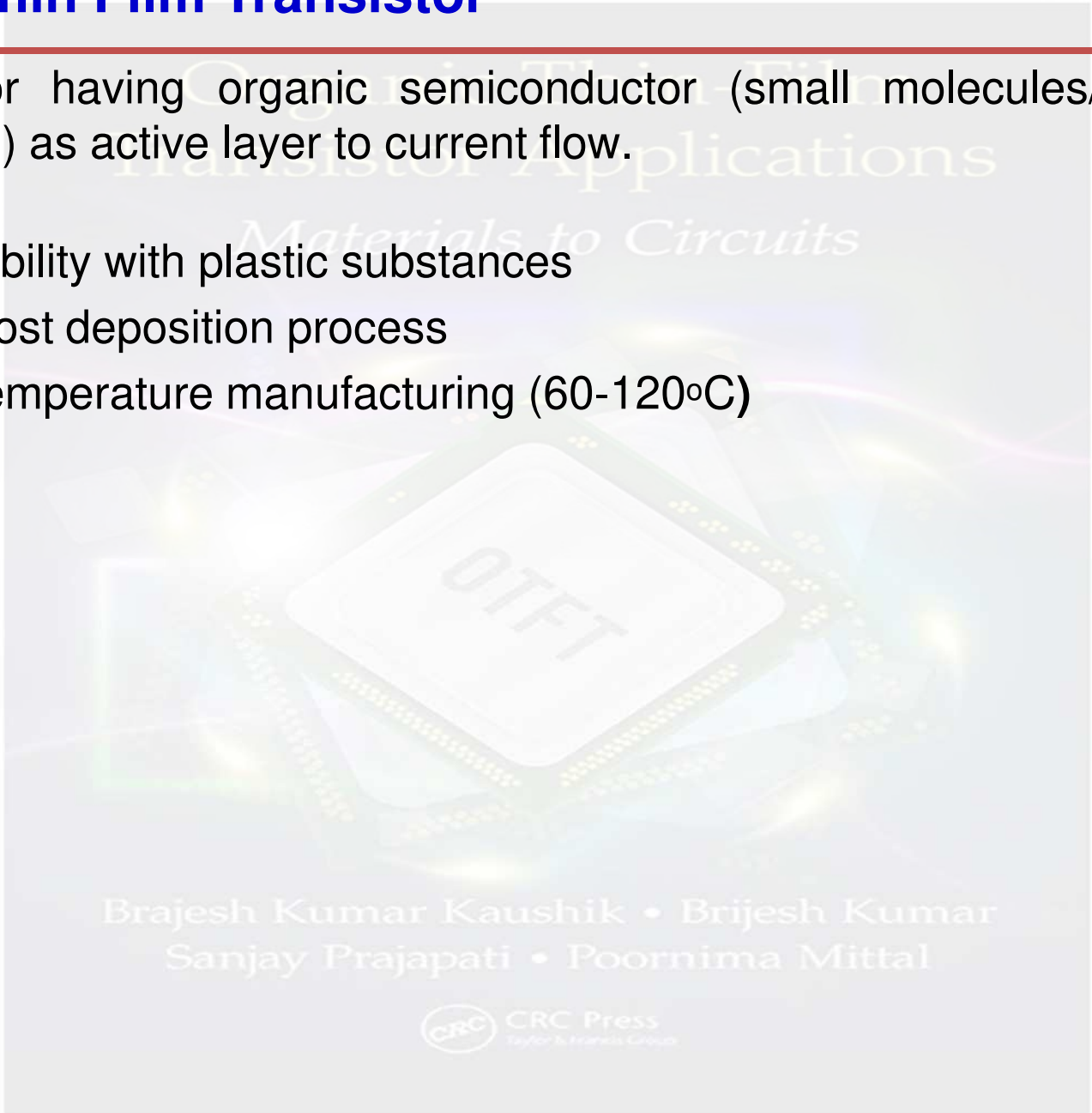




Organic Thin Film Transistor Applications Materials to Circuits 1st edition Kaushik Solutions Manual

# Comparison of BGTC and BGBCOTFTs Structures

## BGTC

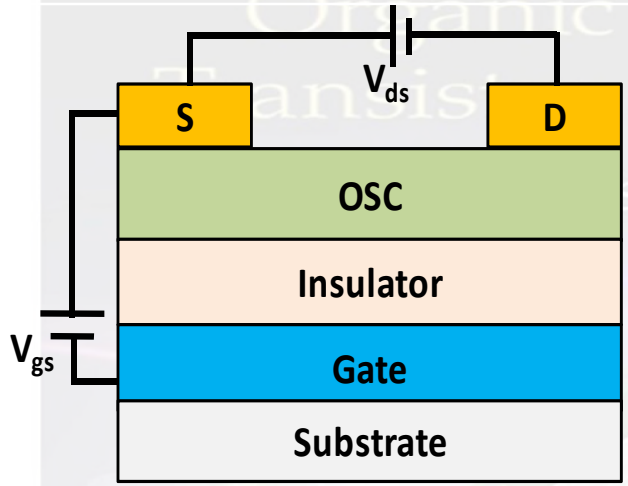


- Low Contact Resistance.
- High Mobility.
- High Current
- Larger Channel Length

## BGBC

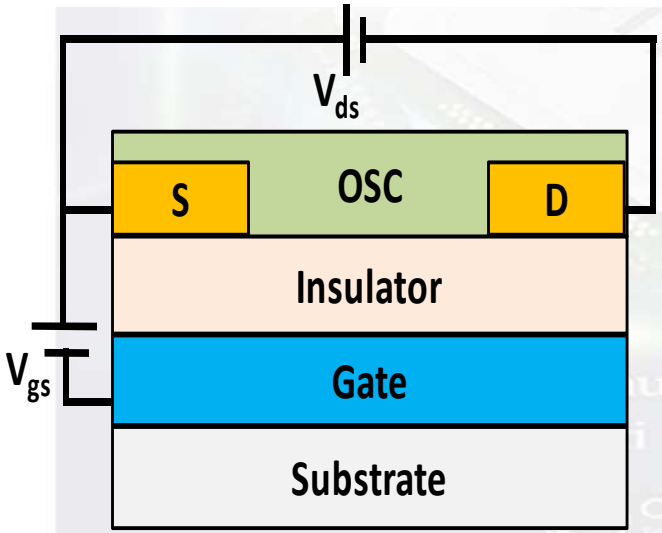


- High Contact Resistance
- Low Mobility.
- Low Current.
- Easy to Fabricate.

# Comparison of TGBC and TGTC OTFTs Structures

## TGBC

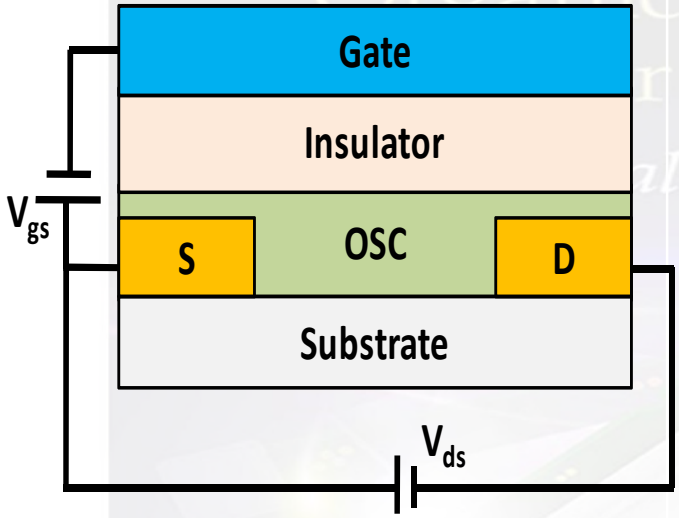


- Tough Fabrication.
- Low Contact Resistance

## TGBC

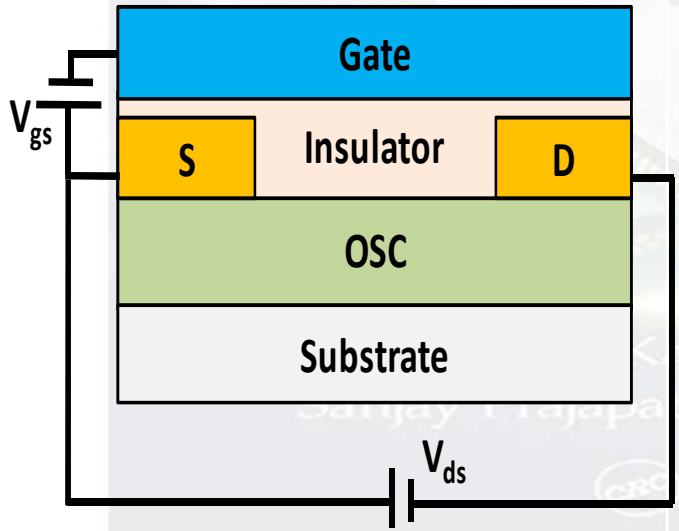


- Easy to Fabricate.
- High Contact Resistance.
- Similar to MOSFET.

# Difference Between Organic and Inorganic Material

| S.N. | ORGANIC MATERIAL | INORGANIC MATERIAL |
|---|---|---|
| 1. OSC | Polymer/Small molecule based organic material | Silicon based inorganic material |
| 2. Charge carriers: | Polarons and Excitons | Charge carriers through electrons, holes and ions. |
| 3. Charge Transport: | Hopping | Energy band gap |
| 4. Mobility: | $10^{-6}$ -5 $cm^2/V.s$ | $10^{-2}$ - $10^{-4}$ $cm^2/V.s$ |
| 5. Bonding: | Ionic, Covalent and Van-der waal force | Ionic, Covalent, metallic |
| 6. Cost: | \$ 5/$ft^2$ | \$ 100/$ft^2$ |
| 7. Fabrication Cost: | Low capital | \$1 - \$ 10 billion |
| 8.Temperature Range: | Low temp (30 – $120^0$ C) | Greater than $1050^0$ C |
| 9. Device Size: | 10ft X Roll to Roll | Less than $1m^2$ |
| 10.Substrate | Flexible Plastic Substrate | Rigid Glass or Metal |



Organic Thin Film Transistor Applications Materials to Circuits 1st edition Kaushik Solutions Manual

| S. N. | ORGANIC MATERIAL | INORGANIC MATERIAL |
|---|---|---|
| **11.Process Conditions:** | Ambient processing | Ultra Clean Room |
| **12. Process:** | Continuous direct printing | Multi–step photo lithography |
| **13. Biodegradability:** | Biodegradable being made from carbon | Non biodegradable |
| **14. Compatibility:** | With flexible or plastic substrates | Non compatible with plastic or flexible substrate |
| **15. Free Carriers:** | Do not support free electrons and holes instead have Polarons and excitons | Free carriers in form of electrons and holes. |
| **16. Effective Mass:** | Huge | Less |

# OTFTs Performance Parameters

## Transfer ($I_d$-$V_g$) Curve at saturation region

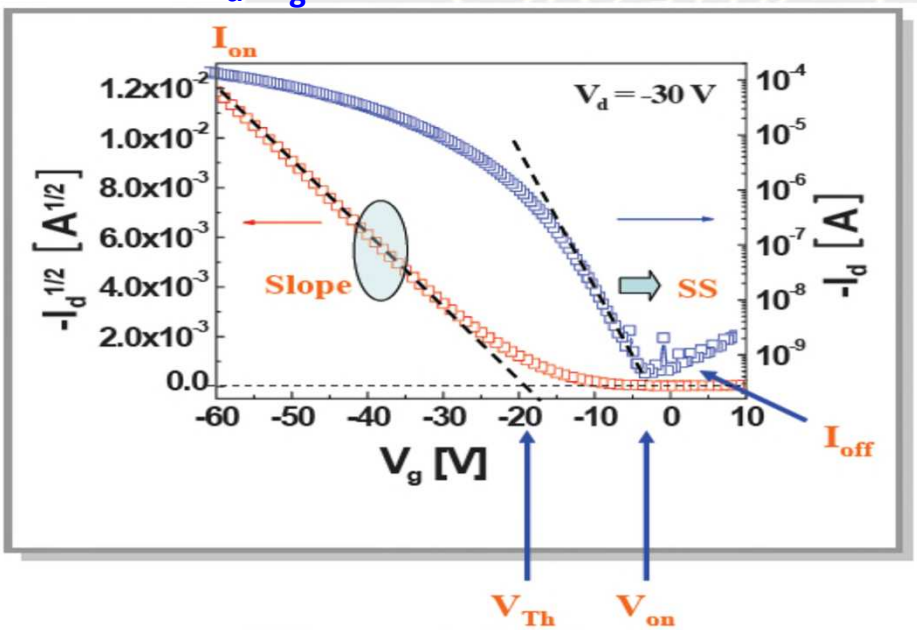


## Performance Parameters

**Field Effect Mobility (μ) [cm²/V.s]**

$$slope = \left(\frac{W\mu C_i}{2L}\right)^{1/2} \qquad \mu_{lin} = \frac{Lg_m}{WC_iV_D}$$

$$\mu_{sat} = \frac{2L}{WC_i}\left(\frac{\partial\sqrt{I_{Dsat}}}{\partial V_G}\right)^2$$

**Threshold Voltage ($V_{Th}$)**

**On/Off Current Ratio ($I_{on}/I_{off}$)**

**Sub-threshold Slope (SS)**

$$SS = \frac{\partial[V_G]}{\partial[\log_{10} I_D]}$$

**Transconductance ($g_m$)**

$$g_m = \frac{\partial I_{Dlin}}{\partial V_G}$$

- ❖ **Performance of an OTFT is characterized in terms of several conventional parameters, including**
- ✓ **Field effect mobility,**
- ✓ **Threshold voltage,**
- ✓ **On/off current ratio**
- ✓ **Sub-threshold slope**
- ✓ **Transconductance**

# Factors Influencing OTFTs Performance

| Performance Parameters | Dominant Factors |
|---|---|
| **Mobility (High)** | Fabrication Technique, Impurity, Gate Biasing, Material for Semiconductor |
| **On – Current (High)** | W/L , Mobility, Contact Resistance, Channel Length |
| **Off - Current (Low)** | W/L, Gate Insulator, Contact Resistance |
| **Threshold Voltage (Low)** | Channel Length, Thickness of Semiconductor Layer |
| **Sub-Threshold Slope (Steep Slope)** | Capacitance & Thickness of Insulator<br>Drain /Source and Gate Biasing |
| **Contact Resistance (Low)** | Structure of PTFT Channel Width |



Organic Thin Film Transistor Applications Materials to Circuits 1st edition Kaushik Solutions Manual

# Material Requirements for OTFTs

- Target: > 1 $cm^2/Vs$ on/off ratio >$10^6$ for n type or p/n type Organic Semiconductors
- Conjugated π-Electron System, High Electron Affinity ( for n type) or ambipolar Characteristics (for p/n type)
- Good Intermolecular Electronic Overlap
- Good Film Forming Properties
- Chemical Purity
- Stability



Organic Thin Film Transistor Applications Materials to Circuits 1st edition Kaushik Solutions Manual

# Organic and Inorganic Device Materials

| Materials | Organic ( PTFTs / OTFTS/OFETs) | Inorganic (MOSFETs/TFTs) |
|---|---|---|
| **Substrate** | PET-Polyethylene Terephthlate, PEN –Polyethylene Naphthalate, Klauk et al. 2003etc.(High Toughness & thermal resistance, Flexibility, Light weight) | Silicon wafer (High Melting Point, good flatness, Low Diffusivity of chemical) |
| **Contact Electrodes** | Gold,Platinum,Al,Mg,Pd source/drain metal with large work function matched with either HOMO or LUMO. Polymer contact-PEDOT:PSS | Metals (**Au, Cu)** |
| **Semiconducting Layer (Channel/ Thin Film)** | Organic Semiconducting material with electrical characteristics P3HT- Poly(-3-hexylthiophene), P3AT-Poly (3-alkylthiophene) P3OT- poly (3-octylthiophene) Pentacene: good electrical Propt.) | a-Si:H, Si |
| **Dielectric layer** | Gate insulating layer with high dielectric constant and high resistivity (PMMA-Polymethyle methacrylate ) | Insulating Materials $SiO_2$, $TiO_2$, $Al_2O_3$ |

## Organic Semiconductors

- ❖Organic semiconductors are classified as the conducting polymers and small molecules.
- ❖Mobility of polymers is found lower than small molecules due to higher molecular weight.
- ❖To obtain it higher; the grains of semiconductor should be larger in size.
- ❖Performance of Polymer transistor (PTFTs/OTFTs) critically depends on the chemical and structural ordering of the chains at interface of OSC-insulator.

### ▪Important Influencing Factors

- ❖Interface of metal and dielectric with semiconductor
- ❖Ordered molecular structure of the active layer
- ❖Efficient injection at contacts and stability.



Organic Thin Film Transistor Applications Materials to Circuits 1st edition Kaushik Solutions Manual

## Organic Semiconductor Material Basics

- ✓ An **organic semiconductor** is an organic material with semiconductor properties.
- ✓ **Molecular conjugation** :The fundamental property that allows organic molecules to conduct electronic charge.
- ✓ Conjugation causes **Delocalization** and allow charge transport.
- ✓ Organic Semiconductor materials categories as:
- ✓ Polycyclic aromatic compounds(e.g. Pentacene, anthracene, etc)
- ✓ Polymeric organic semiconductors(e.g. Poly(3-hexylthiophene, etc )



Organic Thin Film Transistor Applications Materials to Circuits 1st edition Kaushik Solutions Manual

# Electronic structure of Organic semiconductor

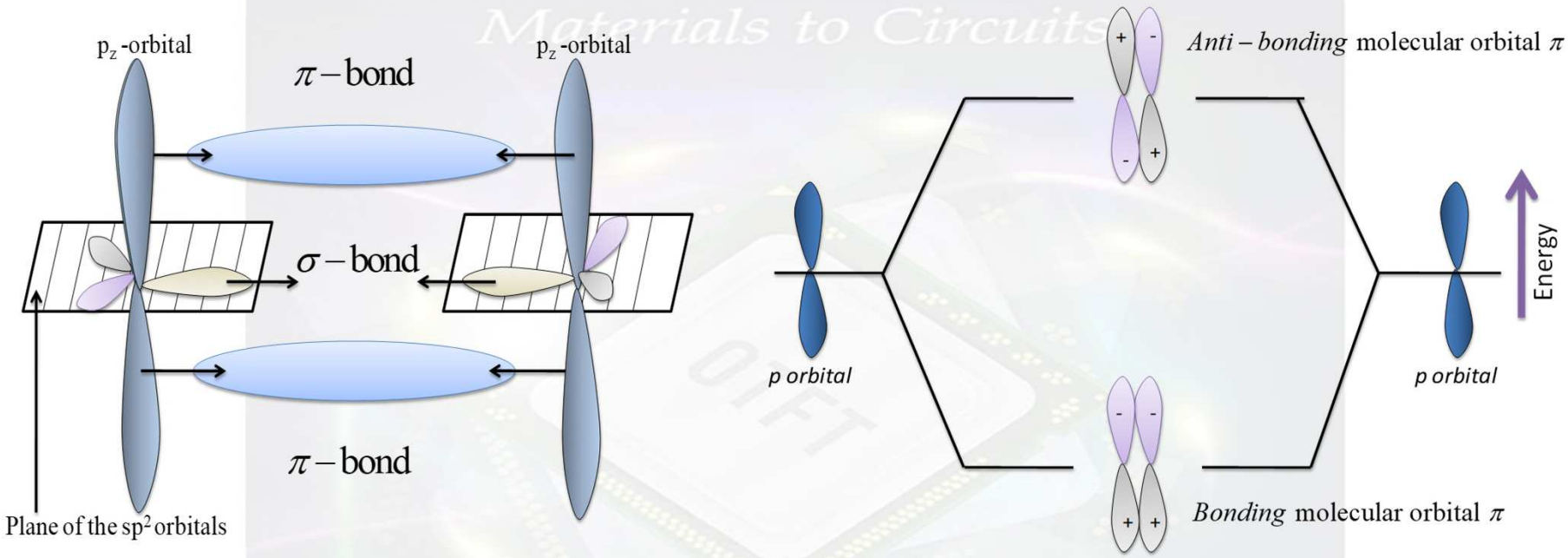


**Fig.** (a) $sp^2$ hybridization of two carbon atoms and (b) Bonding of $p_z$ orbitals.

# Organic and Inorganic Semiconductors

**Organic Semiconductor**

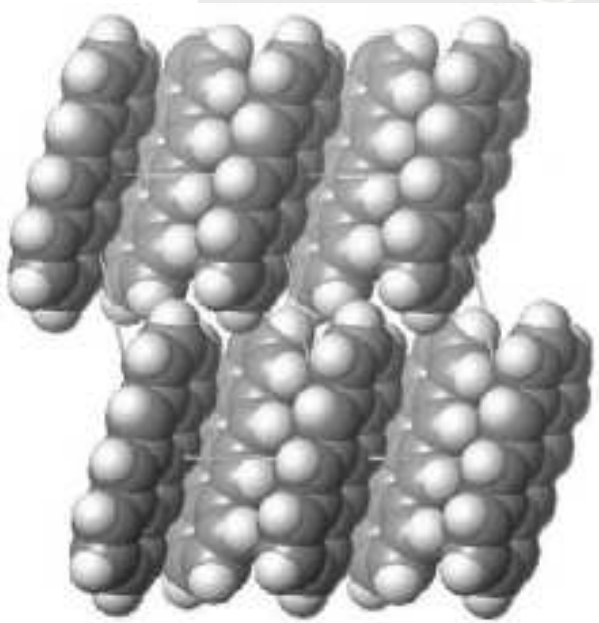

- Weak Van der Waals interaction forces
- π-bond overlapping
- Molecular gas property (molecule's identity)
- Hopping type charge transport dominant
- Low mobility and small mean free path

**Inorganic Semiconductor**

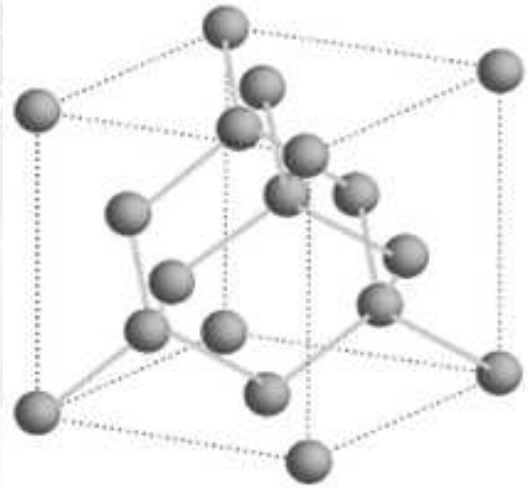

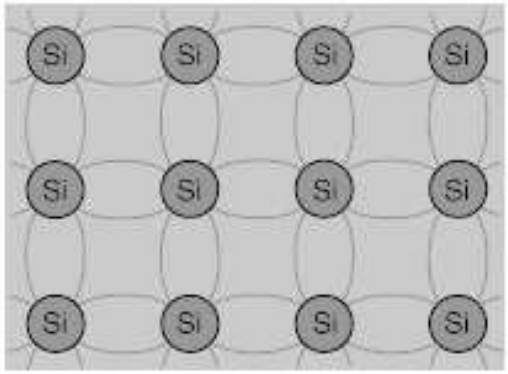


- Strong covalent bonds
- σ-bond
- Only crystal property
- Band type charge transport dominant
- High mobility and large mean free path

# P-type Organic Semiconductors

## Small Molecules

**Most extensively used *p*-type Small molecule OSCs are**

- ❖Pentacene
- ❖6,13-bis_triisopropyl-silylethynyl (TIPS) pentacene
- ❖Tetracene
- ❖Pentacene and its derivatives are the most promising and extensively used materials due to highest mobility.
- ❖Its deposition on dielectric $SiO_2$ yielded higher carrier mobility.

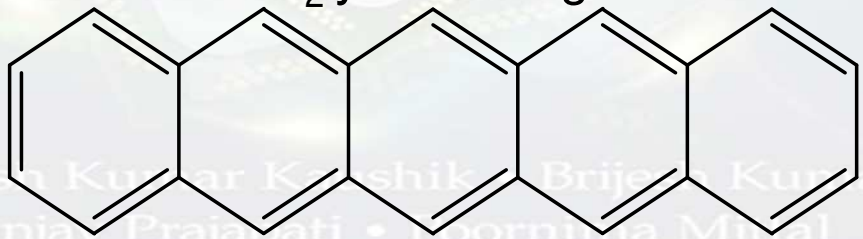

Pentacene

**Chemical Structure of Pentacene small molecule Semiconductor**



Organic Thin Film Transistor Applications Materials to Circuits 1st edition Kaushik Solutions Manual

## Conducting Polymers

Most extensively used *p*-type conducting polymers are

- ✓PA - Polyacetylene
- ✓Polythiophene
- ✓Polyfluorene
- ✓P3AT - Poly (3-alkylthiophene)
- ✓P3HT - Poly(-3-hexylthiophene)
- ✓ P3OT - poly (3-octylthiophene)
- ✓PQT-12 - Poly 3, 3''-dialkylquarterthiophene
- ✓F8T2 - Poly-9, 9' dioctyl-fluorene-co-bithiophene



Organic Thin Film Transistor Applications Materials to Circuits 1st edition Kaushik Solutions Manual

## N-type Organic Semiconductors

- ✓ p and n-type OSCs are required to design the complementary inverters that are beneficial for low power consumption, higher noise margin and better stability.
- ✓Therefore, the development of *n*-type semiconductors is equally important.
- ✓There is an optimum thermodynamic stability window in *n*-type doped materials.
- ✓It strongly depends on the free energy of activation that is associated with the chemical process/reaction with either water or oxygen.
- ✓While designing these devices, the semiconductor must be utilized which, can allow the injection of electrons into its LUMO.



Organic Thin Film Transistor Applications Materials to Circuits 1st edition Kaushik Solutions Manual

## Ambipolar Materials OSCs

- ✓In the literature, the majority of OTFTs is demonstrated either by *p* or *n*-type semiconductors.

- ✓To achieve the organic complementary technology either *n* and *p*-type transistors can be incorporated by electrical connection or ambipolar charge transport can be realized in a single transistor.

- ✓Researchers reported high gain inverter with a natural pigment-Indigo, which contains the balanced electron and hole mobility and good stability against the degradation in air.

## Source and Drain Electrode Materials

- ✓ Electrodes can be fabricated using either inorganic or organic materials.
- ✓ Contact metal for source (S) and drain (D) should contain low interface barrier with active layer to inject a large number of carriers.
- ✓ Contacts must possess a small resistance.
- ✓ Contact Electrode can be fabricated by thermal evaporation method.
- ✓ Adding Ni on Au improves the adhesion of gold on oxide, whereas, Pt electrodes are inferior comparatively.



Organic Thin Film Transistor Applications Materials to Circuits 1st edition Kaushik Solutions Manual

# Work Function of S/D Contact Electrodes

| Electrode Materials | Work function (eV) |
|---|---|
| Au (Gold) | 5.1 |
| Cu (Copper) | 4.7 |
| Ag (Silver) | 4.0 |
| Cr (Chromium) | 4.5 |
| Al (Aluminum) | 4.0 - 4.28 |
| Ni (Nickel) | 5.0 - 5.22 |
| Ti (Titanium) | 3.84 |
| Pt (Platinum) | 5.65 |
| Ca (Calcium) | 2.87 |
| Co (Cobalt) | 5.0 |
| Fe (Iron) | 5.0 |



Organic Thin Film Transistor Applications Materials to Circuits 1st edition Kaushik Solutions Manual

## Gate Electrode Materials

- Selection of material for gate (*G*) electrode should be based on good adhesion and patterning capabilities to the substrate and gate dielectric.

- Gate metal work function should be comparable to the active semiconductor layer to attain lower threshold voltage ($V_t$).

- Such materials include heavily doped silicon, Al, Au, indium tin oxide (ITO) etc.



Organic Thin Film Transistor Applications Materials to Circuits 1st edition Kaushik Solutions Manual

## Gate Dielectric Materials

- ❖Insulator material needs to have very high resistance to prevent the leakage between gate and channel.
- ❖High dielectric constant to achieve enough capacitance ($C_i$) for channel current flow.
- ❖High dielectric constant insulators result in lower switching voltage and elevated current capabilities.
- ❖**Organic polymers**
  - ✓PMMA
  - ✓PVP
  - ✓PI
  - ✓PVA
- ❖Demonstrate good process ability and dielectric properties



Organic Thin Film Transistor Applications Materials to Circuits 1st edition Kaushik Solutions Manual

## Inorganic Gate Dielectric Materials

- Currently, the researchers are focusing to enhance the properties of dielectric materials, since it is extremely crucial to achieve the reliability and high-performance.

- Dielectric materials should have the compatibility with OSCs, these materials should exhibit high insulation also.

- High resistivity reduces the interface trap density between OSC and gate dielectric which, in turn prevents the leakage



Organic Thin Film Transistor Applications Materials to Circuits 1st edition Kaushik Solutions Manual

## Substrate Materials

- Most of the OTFTs are fabricated on a heavily doped silicon substrate to achieve the film of $SiO_2$ dielectric with ease of oxidation.

- Si is often used in electronics not only for its intrinsic properties but also for its good interface with thermally grown oxide.

- Organic substrates like poly ethylene-naphthalate have shown remarkable performance in term of flexibility that motivates the researchers for its utilization in flexible electronic devices and circuits.



Organic Thin Film Transistor Applications Materials to Circuits 1st edition Kaushik Solutions Manual

# Limitations of Organic Material

- Organic semiconductors are **very soft and sophisticated**.
- Organic Materials **degrade** and can break easily .
- Characteristics of **organic materials changes** with environmental conditions after long duration.
- Most of **instability comes from chemical structure** of compounds.
- **Lower mobility** and **switching speed** compared to silicon based devices
- Due to low mobility, it is limited to low speed applications.

# Performance of *p* and *n*-type OSC Materials in terms of Mobility

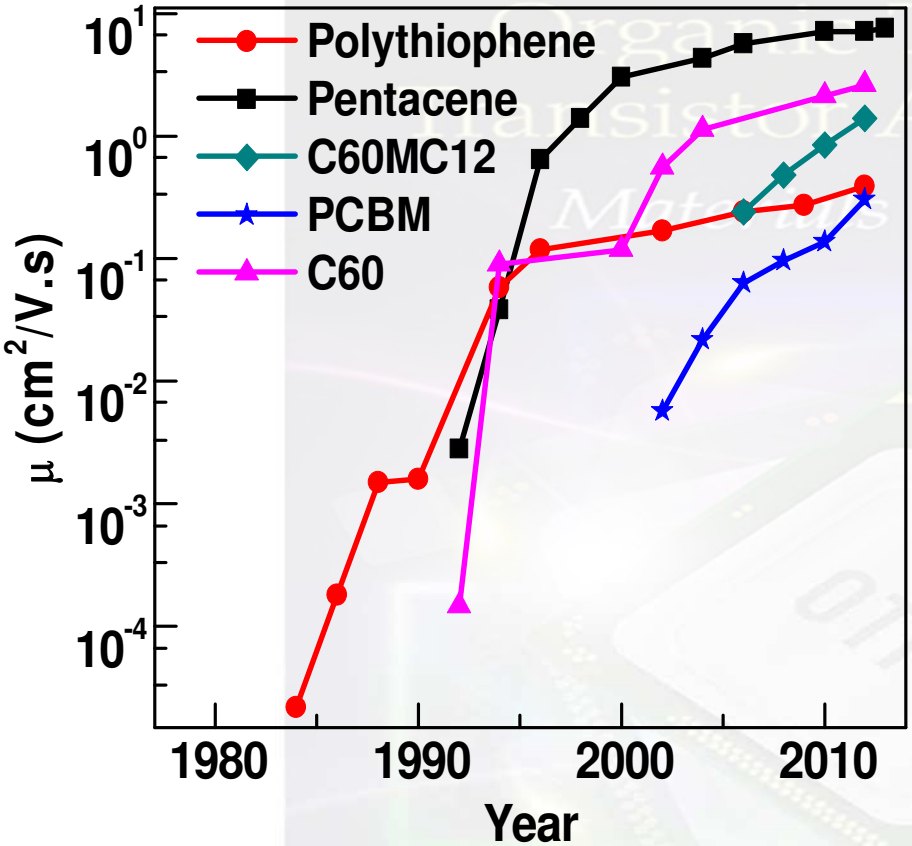


Comparative plot of mobility growth for *p*- and *n*-type OSCs

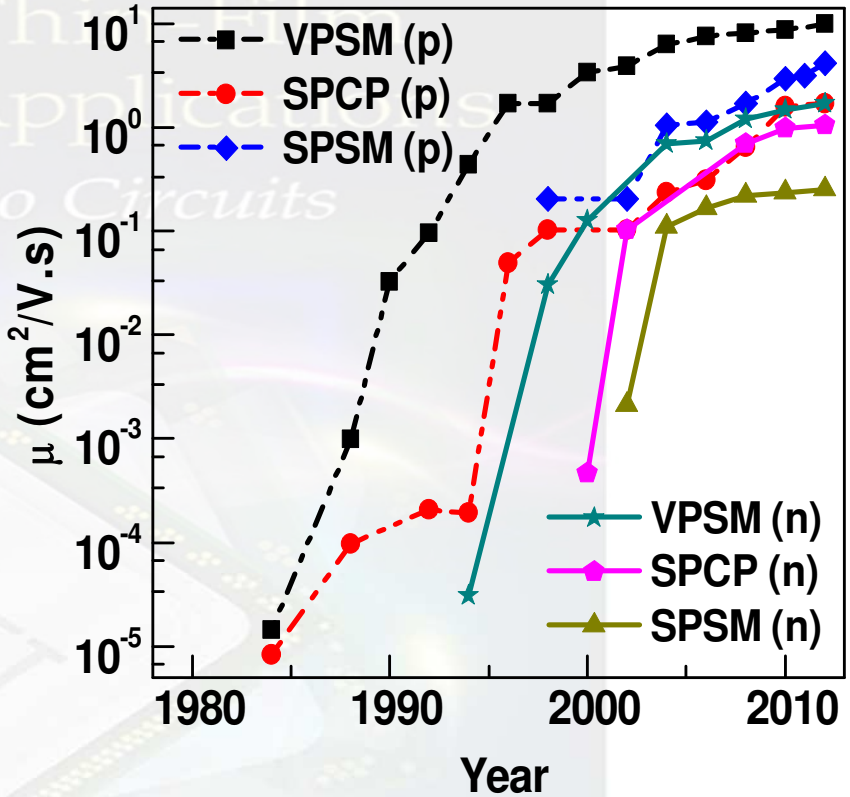


Comparative plot for growth in mobility of p- and n-type transistors w. r. t. fabrication processes.

# Basic Fabrication Steps SG-OTFT (BGBC)

Substrate
(Warm Soap Solution, RCA Cleaning)

Gate Metal
(Sputter, Spin Coating, Wet Etching , Evaporation)

Gate Dielectric Deposition
(Sputter, Spin Coating, Dry Etching )

Source/Drain Contacts
(Sputter, Evaporation, Lift-Off , E-beam Deposition, Wet Etching)

Pentacene Thin Film
(Vacuum Deposition, Thermal Evaporation, Spin Coating)

Passivation Layer
(CVD, Dry Etching
RIE: Reactive Ion Etching)



Organic Thin Film Transistor Applications Materials to Circuits 1st edition Kaushik Solutions Manual

# Basic Fabrication Steps SG-OTFT (BGTC)

**Substrate**
Materials: Heavily doped Si wafer /glass /plastic or organic compatible material
Process: RCA cleaning/cleaning by suitable solution

↓

**Gate Metal**
Materials: Organic/inorganic
Process: Vacuum thermal evaporation/solution processing.

↓

**Gate Dielectric**
Materials: Organic/inorganic
Process: Thermal evaporation/solution processing

↓

**Organic Semiconductor**
Material: Small molecules/conducting polymers
Process: Thermal evaporation/ solution processing

↓

**Source/Drain Contact**
Materials: Organic/inorganic
Process: Shadow masking/lithography/lift-off/transfer printing

↓

**Passivation Layer**
Materials: Organic/inorganic insulator
Process: CVD, Dry Etching, RIE: Reactive ion etching



Organic Thin Film Transistor Applications Materials to Circuits 1st edition Kaushik Solutions Manual

# Organic TFT Applications

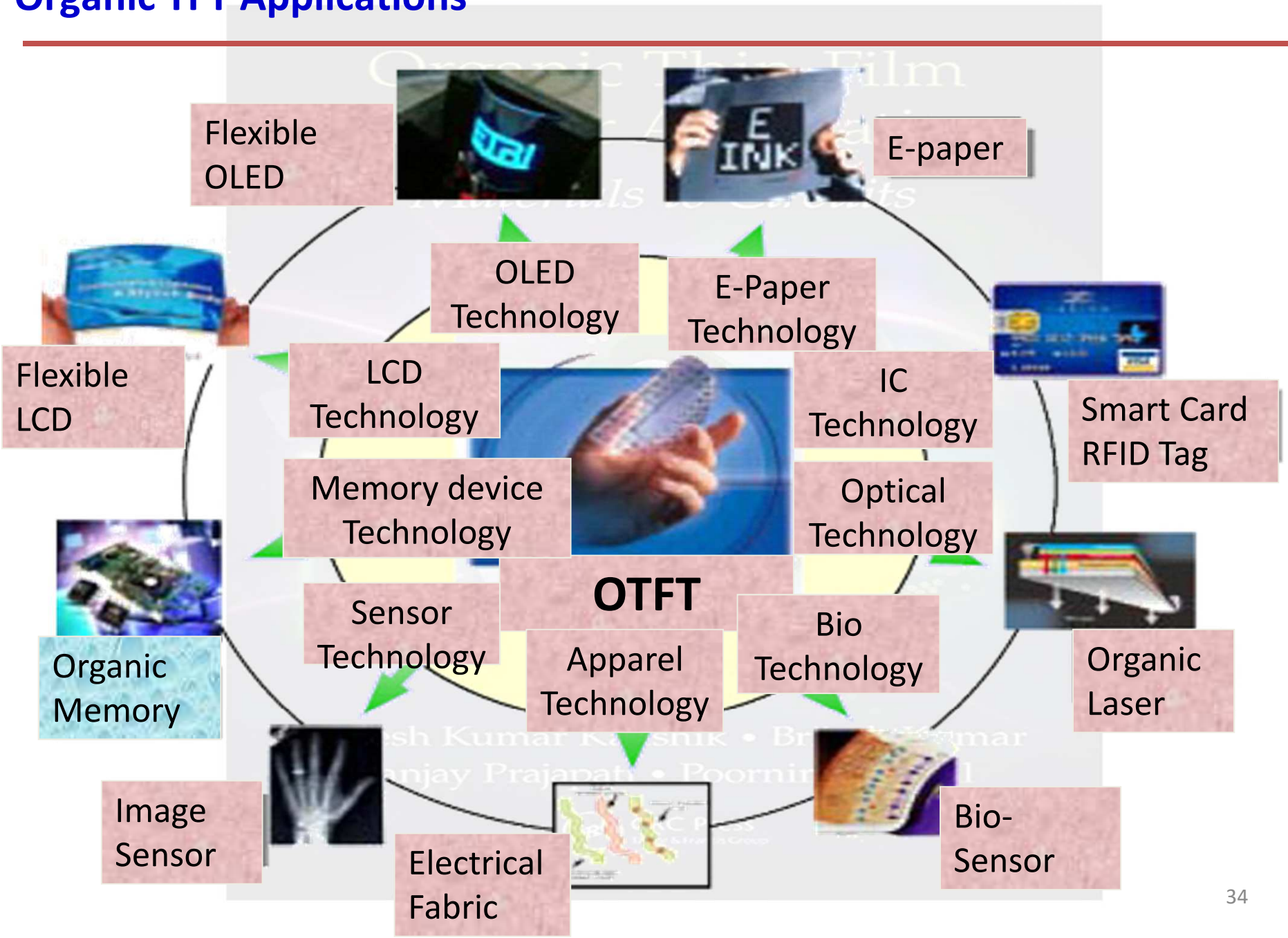

## Effect of Scaling on OTFT Parameters and Performance

- Scaling is not very much effective in OTFT due to their lower drive current
- Effect of scaling is almost similar in both OTFT and MOSFET devices
- Current in OTFT reduces by the scaling factor in full scaling that in turn degrades the switching behavior
- Constant voltage scaling increases the drain current and power density too
- OTFTs are strongly affected by the contact resistance that becomes increasingly evident as the channel length is scaled down



Organic Thin Film Transistor Applications Materials to Circuits 1st edition Kaushik Solutions Manual

## Lifetime and Durability of Organic Semiconductors

- Characteristics of OSCs alters with time and ecological environment due to their susceptibility to water and oxygen under ambient conditions
- Several *n*-channel TFTs processed and tested under inert condition only
- Numerous issues are still open ended, specifically those associated with the stability and performance variation from roll to roll and device to device
- Optimization of fabrication methodology and synthesis of novel materials, the lifetime/durability can be undoubtedly increased
- Through encapsulation of the devices, longer functioning lifetime can be achieved
- Due care must be taken against exposure of devices to moisture and oxygen, which can be achieved by depositing a film of inorganic oxides and special protective coatings.



Organic Thin Film Transistor Applications Materials to Circuits 1st edition Kaushik Solutions Manual

# Steps Needed for OTFTs to be Commercialized on a Larger Scale

- Improvement in Stability, lifetime and durability
- Cost economy, temperature dependency, operating bias and power dissipation
- Miniaturization
- Look for high performance OSCs, electrode, dielectric and substrate materials and novel OTFT structures
- Surface treatment and self-assembled monolayer of the dielectric
- High doping region near the contacts and additional OSC layer between contact and OSC.



Organic Thin Film Transistor Applications Materials to Circuits 1st edition Kaushik Solutions Manual

## Summary

- Organic transistor boasts of a bright future **with a wide spectrum of applications.**

- It is required to **develop suitable models** to adequately understand the OTFTs behavior..

- To investigate the **impact of active and dielectric layers thickness on the performance of both top and bottom contact structures** individually

- It is strongly required to **develop techniques** that can substantially improve the performance of organic digital circuits.



Organic Thin Film Transistor Applications Materials to Circuits 1st edition Kaushik Solutions Manual